San Luis Obispo County
Los Osos Wastewater Project Development

POTENTIAL VIABLE PROJECT ALTERNATIVES

ROUGH SCREENING ANALYSIS

REPORT
March 2007

In association with

Crawford Multari & Clark ASSOCIATES

Cleath & Associates
Engineering Geology/Hydrogeology

San Luis Obispo County

Los Osos Wastewater Project Development

POTENTIAL VIABLE PROJECT ALTERNATIVES

ROUGH SCREENING ANALYSIS

TABLE OF CONTENTS

Page No.

CHAPTER TS – TECHNICAL SUMMARY TS-1
TS.1 INTRODUCTION TS-1
TS.1.1 Wastewater Flow and Load Projections TS-3
TS.1.2 Groundwater Management TS-4
TS.2 EFFLUENT DISPOSAL/REUSE ALTERNATIVES TS-4
TS.3 TREATMENT ALTERNATIVES TS-4
TS.4 SOLIDS TREATMENT AND DISPOSAL ALTERNATIVES TS-4
TS.5 TREATMENT FACILITY SITING ALTERNATIVES TS-8
TS.6 COLLECTION SYSTEM ALTERNATIVES TS-8
TS.7 NEXT STEPS TS-11

CHAPTER 1 – INTRODUCTION 1-1
1.1 PROBLEM STATEMENT 1-1
1.2 ROUGH SCREENING - STEP 1 OF ALTERNATIVES ANALYSIS 1-2
1.2.1 Previous Project (Tri-W) 1-2
1.2.2 Environmental Considerations and the California Environmental Quality Act (CEQA) 1-3
1.2.3 Public Input and the Technical Advisory Committee (TAC) 1-4
1.2.4 Proposition 218 Assessment Proceedings and Property Owner Vote 1-4
1.3 APPROACH TO WORK 1-7
1.3.1 Alternatives That Are Not Under Consideration for Rough Screening 1-9
1.4 PROJECT CONSIDERATIONS 1-9
1.4.1 Previous Efforts 1-9
1.4.2 NWRI Final Report 1-10
1.4.3 RWQCB Feedback 1-11
1.4.4 SWRCB Discussions 1-11
1.5 BASIS OF PROJECT 1-11
1.5.1 Flows and Load 1-11
1.5.2 Regulatory Requirements 1-16
1.5.3 Groundwater Management 1-18
1.6 Rough Screening report - Following Sections 1-18

CHAPTER 2 – EFFLUENT DISPOSAL / REUSE ALTERNATIVES 2-1
2.1 PURPOSE 2-1
2.2 REGULATIONS AND WATER QUALITY REQUIREMENTS 2-1
2.3 EFFLUENT DISPOSAL/REUSE ALTERNATIVES 2-3
2.3.1 Unrestricted Reuse 2-3

2.3.2 Percolation Ponds and Leachfields 2-6
2.3.3 Spray Field.....2-8
2.3.4 Creek Discharge 2-9
2.3.5 Constructed Terminal Wetlands 2-10
2.3.6 Direct Groundwater Injection 2-11
2.4 GROUNDWATER BALANCE SUMMARY 2-11
2.4.1 Sea Water Intrusion Mitigation.....2-12
2.4.2 Upper Aquifer Water Quality Impacts 2-12
2.4.3 Buildout Water Demand and Safe Yield 2-13
2.4.4 Wastewater Project Limitations 2-14
2.5 SUMMARY AND RECOMMENDATIONS FOR FURTHER STUDY 2-14
2.5.1 Alternatives Eliminated 2-15
2.5.2 Potentially Viable Alternatives for Detailed Evaluation 2-17
2.5.3 RECOMMENDATIONS FOR FURTHER STUDY.....2-18

CHAPTER 3 – TREATMENT TECHNOLOGY ALTERNATIVES..... 3-1
3.1 PURPOSE 3-1
3.2 WASTEWATER TREATMENT PROCESS ALTERNATIVES 3-1
3.2.1 Suspended-Growth Activated Sludge.....3-1
3.2.2 Attached-Growth Fixed Media 3-7
3.2.3 Advanced Wastewater Treatment Ponds 3-9
3.2.4 Summary of Wastewater Treatment Process Alternatives 3-13
3.3 SUPPORT FACILITIES 3-13
3.4 SUMMARY AND RECOMMENDATIONS FOR FURTHER STUDY 3-16
3.4.1 Screening Approach 3-16
3.4.2 Potentially Viable Alternatives for Detailed Evaluation 3-16
3.4.3 Recommendations for Further Study.....3-17

CHAPTER 4 – SOLIDS TREATMENT AND DISPOSAL ALTERNATIVES 4-1
4.1 PURPOSE 4-1
4.2 REGULATIONS..... 4-1
4.2.1 Federal 4-1
4.2.2 State and Local.....4-2
4.3 TREATMENT AND DISPOSAL OBJECTIVES..... 4-2
4.4 DESIGN CRITERIA 4-2
4.4.1 Biosolids Production Projections 4-2
4.4.2 Biosolids Characteristics.....4-3
4.5 BIOSOLIDS TREATMENT AND DISPOSAL PROCESSES 4-3
4.5.1 Thickening 4-4
4.5.2 Stabilization Alternatives.....4-4
4.5.3 Dewatering Alternatives.....4-7
4.5.4 Recycling/Disposal Processes.....4-8
4.5.5 Additional Considerations 4-9
4.6 SUMMARY AND RECOMMENDATIONS FOR FURTHER STUDY 4-10
4.6.1 Screening Approach 4-10
4.6.2 Potentially Viable Extended Secondary Alternatives 4-11
4.6.3 Potentially Viable Conventional Secondary Alternatives 4-14
4.6.4 Recommendations for Further Study.....4-15

CHAPTER 5 – TREATMENT FACILITY SITING ALTERNATIVES 5-1
5.1 PURPOSE 5-1

5.2 SITE REQUIREMENTS AND ISSUES 5-1
5.3 SUMMARY AND RECOMMENDATIONS FOR FURTHER STUDY 5-5
5.3.1 Screening Approach 5-5
5.3.2 Potentially Viable Alternatives for Detailed Evaluation 5-5
5.3.3 Recommendations for Further Study 5-6

CHAPTER 6 – COLLECTION SYSTEM ALTERNATIVES 6-1
6.1 PURPOSE 6-1
6.2 COLLECTION SYSTEM ALTERNATIVES 6-1
6.2.1 Conventional Gravity Collection System 6-1
6.2.2 Septic Tank Effluent Pumping/Septic Tank Effluent Gravity (STEP/STEG) Collection System 6-1
6.2.3 Vacuum System Collection System 6-1
6.2.4 Low Pressure Collection System 6-2
6.2.5 Combined Gravity, Vacuum, and Low Pressure Collection System 6-2
6.2.6 Summary of Collection System Alternatives 6-2
6.3 COLLECTION SYSTEM CASE STUDIES 6-4
6.3.1 STEP/STEG Collection System Case Studies 6-4
6.3.2 Vacuum Collection System Case Studies 6-7
6.3.3 Low Pressure Collection System Case Studies 6-9
6.4 SUMMARY AND RECOMMENDATIONS FOR FURTHER STUDY 6-12
6.4.1 Screening Approach 6-12
6.4.2 Potentially Viable Alternatives for Detailed Evaluation 6-12
6.4.3 Recommendations for Further Study 6-13

CHAPTER 7 – SUMMARY AND RECOMMENDATIONS 7-1
7.1 PURPOSE 7-1
7.2 MATRIX OF POTENTIALLY VIABLE PROJECT COMPONENTS 7-1
7.3 NEXT STEPS 7-4
7.3.1 Detailed Evaluation 7-4
7.3.2 Schedule and Cost Estimate Considerations 7-4
7.3.3 Recommendations for Further Study 7-5

LIST OF TABLES

Table TS.1 Projected Characteristics of Wastewater TS-3
Table TS.2 Issues for Disposal/Reuse Alternatives TS-5
Table TS.3 Summary of Wastewater Treatment Process Alternatives TS-6
Table TS.4 Treatment Facility Siting Alternatives TS-9
Table TS.5 Collection System Alternatives TS-10
Table 1.1 2006 Water Use Estimate for the District 1-12
Table 1.2 Flow Estimates, 2006 Water Use Estimate 1-14
Table 1.3 Projected Characteristics of Wastewater, Gravity Collection System 1-15
Table 1.4 Projected Characteristics of Wastewater, STEP/STEG 1-15
Table 1.5 Effluent Limits from WDR Order No. 97-8 for Percolation Ponds 1-17
Table 1.6 Recycled Water Limits from WDR Order No. R3-2003-0007 1-18
Table 2.1 Effluent Treatment Levels 2-2
Table 2.2 Anticipated Water Quality Objectives for Disposal/Reuse Alternatives 2-3
Table 2.3 Issues for Disposal/Reuse Alternatives 2-16

Table 3.1 Summary of Wastewater Treatment Process Alternatives 3-14
Table 5.1 Site Requirements and Issues 5-1
Table 5.2 Summary Assessment of Potentially Viable Treatment Sites 5-9
Table 6.1 Collection System Alternatives 6-3
Table 6.2 Utilities Interviewed for STEP Sewer Case Studies 6-4
Table 6.3 Operations and Maintenance Requirements for STEP Sewers 6-6
Table 6.4 Utilities Interviewed for Vacuum Sewer Case Studies 6-7
Table 6.5 Utilities Interviewed for Low Pressure Sewer Case Studies 6-10
Table 6.6 Maintenance Personnel Required for Low Pressure Sewers 6-11
Table 7.1 Tri-W Project Components 7-1
Table 7.2 Matrix of Potentially Viable Project Components 7-2
Table 7.3 Representative Key Issues for Detailed Evaluation 7-6

LIST OF FIGURES

Figure TS.1 General and Special Benefits of Viable Project Alternatives TS-2
Figure 1.1 General and Special Benefits of Viable Project Alternative 1-6
Figure 1.2 Viable Project Alternative Development 1-8
Figure 2.1 Potential Areas for Spray Fields and Agricultural Water Exchange 2-5
Figure 3.1 Flow Schematic for an Extended Aeration MLE Process 3-2
Figure 3.2 Flow Schematic for a Membrane Bio-Reactor (MBR) Process 3-3
Figure 3.3 Flow Schematic for Biolac® Extended Aeration Process 3-4
Figure 3.4 Flow Schematic for an SBR Process 3-5
Figure 3.5 Flow Schematic for an Oxidation Ditch Process 3-6
Figure 3.6 Flow Schematic for a Trickling Filter Process 3-7
Figure 3.7 Flow Schematic for a Rotating Biological Contractor Process 3-8
Figure 3.8 Flow Schematic for an Advanced Integrated Wastewater Pond 3-10
Figure 3.9 Flow Schematic for a Partially Mixed Facultative Pond System 3-12
Figure 4.1 Biosolids Alternatives - Extended Secondary WAS 4-5
Figure 4.2 Biosolids Alternatives - Conventional Secondary WAS 4-6
Figure 4.3 Potentially Viable Biosolids Alternatives - Extended Secondary WAS 4-12
Figure 4.4 Potentially Viable Biosolids Alternatives - Conventional Secondary WAS.. 4-13
Figure 5.1 Sites Previously Considered for a Treatment Plant 5-4
Figure 5.2 Study Sites 5-7
Figure 5.3 Topography of Study Sites 5-8
Figure 5.4 Areas Subject to Flooding and Geologic Constraints 5-13
Figure 5.5 Agricultural Land Classifications and Conservation Status 5-14
Figure 5.6 Soil Types and Regional Geology 5-15
Figure 7.1 Conceptual Viable Project Alternatives Cost Curve 7-8

TECHNICAL SUMMARY

The community of Los Osos, California is located on the coastline of Central California adjacent to the Morro Bay State and National Estuary. This area has no year round surface water source. Consequently, the community relies on the underlying groundwater for its drinking water. The community also relies primarily on privately owned septic tanks for wastewater treatment and disposal. Decades of use of the septic tanks have caused a build up of nitrate and other wastewater-derived contaminants in the groundwater. In an effort to curb the groundwater and resulting surface water pollution, the California Regional Water Quality Control Board Central Coast Region (RWQCB) has required the community to construct a collection system and wastewater treatment plant. On September 20, 2006, the Governor of California signed Assembly Bill 2701, which "authorize[s] the County of San Luis Obispo to design, construct, and operate a wastewater collection and treatment project that will eliminate these discharges, particularly in the prohibition zone, to avoid a wasteful duplication of effort and funds, and to temporarily prohibit the Los Osos Community Services District from exercising those powers." This report was assembled to assist the County in developing a plan to collect, treat, and dispose of, or reuse Los Osos' wastewater. The report provides a rough screening of project component alternatives (Figure TS.1).

TS.1 INTRODUCTION

This rough screening report includes evaluation of alternatives for the five major project components:

- Effluent Disposal/Reuse
- Treatment Technology
- Solids Treatment and Disposal
- Treatment Plant Siting
- Collection System

Other considerations for this report were the previous efforts undertaken to develop a wastewater collection and treatment system for the community of Los Osos. The review of past projects and reports included the Wastewater Facilities Project Final Project Report (Montgomery Watson Americas, March 2001), the Los Osos Wastewater Management Plan Update (Ripley Pacific Company, July 2006) and the National Water Research Institute (NWRI) independent panel review report (December 2006). Also, input from the RWQCB was solicited to ensure that the alternatives generated by this effort meet the requirements they may impose. One of the goals for the project will be to evaluate the advantages and disadvantages of reestablishing State Revolving Fund (SRF) loans.

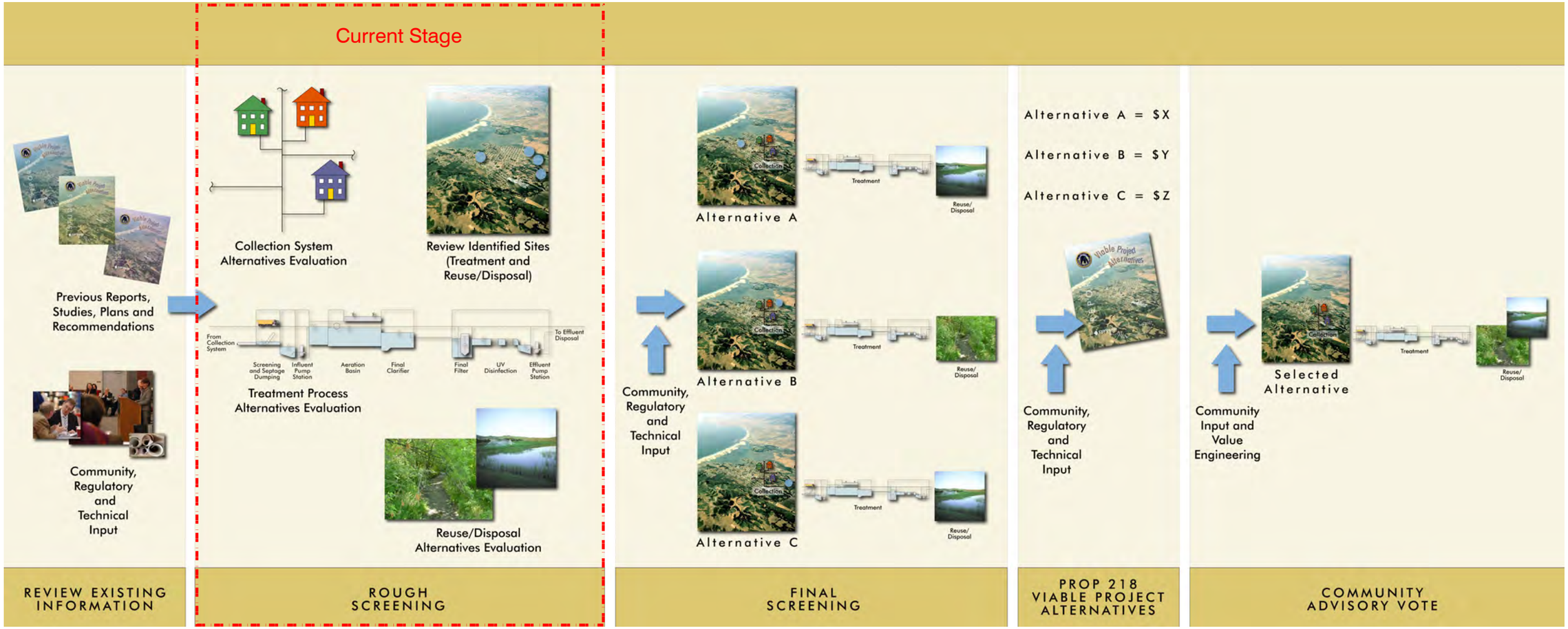

The County has identified a 5-step process to select a viable project alternative. This figure illusttrates the current stage of the project, which is the rough screening.

Figure No. TS.1
VIABLE PROJECT ALTERNATIVE DEVELOPMENT
LOS OSOS WASTEWATER PROJECT DEVELOPMENT
SAN LUIS OBISPO COUNTY

Los207f1-7630.ai

As part of the SRF process, the SWRCB will review plans and specifications and provide conditions for potential project loan funding.

TS.1.1 Wastewater Flow and Load Projections

Current and projected future wastewater flow and load projections establish the basis for collection system and treatment plant sizing. The Wastewater Facilities Project Final Project Report (Montgomery Watson Americas, March 2001), the Los Osos Wastewater Project Revised Project Report (Montgomery Watson Harza, March 2003) and the Los Osos Wastewater Management Plan Update (Ripley Pacific Company, July 2006) included estimates for these parameters. The rough screening incorporated their load estimates, but updated the flow estimates to take into consideration advances in water conservation over the past few years.

Based on 2006 data from the Los Osos Community Services District Water Utility (District), the estimated winter water usage and wastewater flow is 65 gallons per capita per day. The District's Wastewater Committee has estimated buildout population to be served by the future wastewater treatment facility at 18,428 people by 2020. Using the per capita flow and the buildout population, the dry weather wastewater flow is projected to be 1.2 million gallons a day (mgd) and the wet weather wastewater flow is projected to be 1.3 mgd for either a gravity collection system or a STEP/STEG collection system.

Influent concentrations for conventional gravity collection systems and STEP collection systems were estimated, as presented in Table TS.1.

Table TS.1 Projected Characteristics of Wastewater
Los Osos Wastewater Project Development
San Luis Obispo County

Parameter	Units	Gravity System [1]	STEP System [2]
BOD	mg/L	340	120
Suspended Solids	mg/L	390	40
Total Nitrogen	mg/L	56	56

1) Estimate from Montgomery Watson Harza, Inc., 2003.

2) Estimate from review by Bounds, T.R., 1997, assuming filtering of STEP effluent.

Regulatory Requirements

Water quality objectives for Los Osos effluent are spelled out in the WDR Orders previously issued by the RWQCB (WDR Order No. 97-8 and WDR Order No. R3-2003-0007). However, effluent limits for some of the reuse/disposal alternatives under consideration

were not addressed by these Orders. Water quality objectives for the future wastewater treatment facility were anticipated by referring to WDRs issued to other treatment facilities in California, and by consulting with the RWQCB. Specific requirements for each type of reuse or disposal are summarized in Section TS.2 below.

TS.1.2 Groundwater Management

The Los Osos Valley groundwater basin is the sole source for local municipal, private domestic, and agricultural water supply. Under current basin management practices, seawater intrusion is occurring in the lower aquifer due to excessive production, while groundwater in the upper aquifer is underutilized due to nitrate contamination. The Los Osos wastewater project will collect and redistribute a significant portion of the community's water resources. The project provides an opportunity to begin the process of mitigating seawater intrusion, reducing nitrate contamination, and setting long-term goals for achieving a sustainable water supply.

TS.2 EFFLUENT DISPOSAL/REUSE ALTERNATIVES

Issues pertaining to the various reuse/disposal options are outlined in Table TS.2. Treatment levels that may be required by the RWQCB for the disposal and reuse alternatives were determined through the review of past WDRs for Los Osos and WDRs for other wastewater facilities. While this section outlines probable effluent limits, ultimately it is the prerogative of the RWQCB to impose more stringent limits where they feel it is necessary to protect water quality.

The alternatives will pass through rough screening are highlighted in Table TS.2.

TS.3 TREATMENT ALTERNATIVES

The treatment alternatives considered in this report were established based on standard industry practice and previous efforts to provide wastewater treatment in Los Osos. The treatment alternatives that are under consideration are listed in Table TS.3. The highlighted options will pass through rough screening.

TS.4 SOLIDS TREATMENT AND DISPOSAL ALTERNATIVES

Based on the uncertainty of the direction of the biosolids disposal regulations at the state and local levels, it is imperative that the Los Osos facility be designed in a manner that allows for the greatest treatment and disposal flexibility. At the same time, this flexibility must be sensitive of environmental constraints, community values, footprint availability, energy usage, continued operations and maintenance requirements, and capital cost.

Table TS.2 Issues for Disposal/Reuse Alternatives
Los Osos Wastewater Project Development
San Luis Obispo County

Disposal/Reuse Alternative	Sufficient Local Capacity for all flow?	Winter Storage Required	Affect on Sea Water Intrusion	Treatment Level[1]	Other Issues
Unrestricted Reuse - Urban	No, 132 ac-ft/yr identified	This alternative can only accommodate small fraction of flow year round	Helps mitigate	Disinfected Tertiary	• Can fit future development with purple pipe • Can be used for nitrogen removal
Unrestricted Reuse - Agriculture	Possibly - depends on local farmers' cooperation and using land outside basin Need 500 - 800 acres	Yes, 500 to 650 ac-ft	Helps mitigate if applied within basin, to a lesser degree than urban reuse	Disinfected Tertiary	• Farmers' response to idea has been mixed • Possibility of in-lieu exchange of reuse water for Agricultural well water • Can be used for nitrogen removal
Percolation Pond	Yes	No	Helps mitigate if located within basin	Disinfected Secondary 23 or 2.2	• Must be downwind of residential areas • Area lost to agriculture • Possible loss of biological resources
Leachfield	Not at Broderson Site (limited to 800,000 gpd with harvest wells, 400,000 without harvest wells). Would require many sites (more than identified in past reports)	No, if sized for all flow	Helps mitigate if located within basin	Disinfected Secondary 23 or 2.2	• Harvest wells increase capacity, but harvest water disposal is additional issue • Additional cost to transport effluent to west of town (Broderson site) • Area lost to agriculture • Possible loss of biological/archeological resources
Sprayfield	Possibly - depends on using land outside basin Need approximately 600 acres	Yes	Does not address intrusion - most sites outside basin	Disinfected Secondary 23	• Can be used for nitrogen removal • Changes natural wet/dry seasonal cycle, affecting local species
Creek Discharge	Yes	No	Does not address intrusion	Disinfected Tertiary	• Stringent regulations • Species established due to increased flows will be afforded protections
Constructed Terminal Wetlands	Yes	No, if sized for all flow	Helps mitigate if located within basin	Disinfected Secondary 23	• Could be protected by federal and state laws once established • Provides habitat and recreation area
Direct Groundwater Injection	Yes	No	Helps mitigate if located within basin	Disinfected Tertiary	• Stringent regulations • Harvest wells increase capacity, but harvest water disposal is additional issue • Possible disruption of biological/archeological resources

Notes:
1) 23 and 2.2 refer to coliform limits of 23 MPN/100 mL and 2.2 MPN/100 mL, respectively.

Table TS.3 Summary of Wastewater Treatment Process Alternatives
Los Osos Wastewater Project Development
San Luis Obispo County

Treatment Alternative	Relative Construction Cost	Relative O & M Cost	Estimated Acreage Required [1,2] (Acres)	Approximate Nitrogen Removal Capabilities (mg/L)[(4)]	Relative Energy Usage	"Good Neighbor" Features
Suspended Growth Activated Sludge						
Extended Aeration MLE	Moderate	Moderate	6	Probably less than10	Moderate	• Odor treatment as necessary • Low noise/enclosable equipment • Covered facility not cost-effective
Membrane Bio-Reactor (MBR) (Tri-W site only)	High	Moderate	4[3]	Probably less than10	High	• Odor treatment as necessary • Low noise/enclosable equipment • Covered facility for multi-use options feasible
BIOLAC®	Low	Low	10	Probably less than10	Low	• Basin size prohibits odor control • Low noise/enclosable equipment • Covered facility not feasible
Sequencing Batch Reactor (SBR)	Moderate	Moderate	6	Probably less than10	Moderate	• Odor treatment as necessary • Low noise/enclosable equipment • Covered facility not cost-effective
Oxidation Ditch	Moderate	Moderate	8	Probably less than10	Moderate	• Odor control as necessary but costly for oxidation ditch • Low noise/enclosable equipment • Covered facility not feasible
Attached-Growth Fixed Media						
Trickling Filters	Moderate	Moderate	5	Probably greater than 10	Low	• Odor control as necessary • Low noise • Covered facility not feasible
Rotating Biological Contactors (RBCs)	Moderate	Moderate	4-6	Probably greater than 10	Low	• Odor treatment as necessary • Low noise

Table TS.3 Summary of Wastewater Treatment Process Alternatives
Los Osos Wastewater Project Development
San Luis Obispo County

Treatment Alternative	Relative Construction Cost	Relative O & M Cost	Estimated Acreage Required [1,2] (Acres)	Approximate Nitrogen Removal Capabilities (mg/L)[(4)]	Relative Energy Usage	"Good Neighbor" Features
						• Covered facility not cost-effective
Packed Bed Filters	High	Moderate	4-6	Probably greater than 10	Low	• Odor control as necessary • Low noise • Covered facility not feasible
Advanced Wastewater Treatment Ponds						
Advanced Integrated Wastewater Pond System (AIWPS®)	Low	Moderate	64	Probably greater than 10	Low	• Pond size prohibits odor control • Low noise/enclosable equipment • Covered facility not feasible
Facultative Ponds and Constructed Wetlands	Low	Low	60-90	Questionable /Limited Control (Probably greater than 10)	Low	• Limited control of water quality in wetlands • Pond size prohibits odor control • Low noise/enclosable equipment • Covered facility not feasible
Partially Mixed Facultative Ponds	Low	Low	20[(6)]	Questionable /Limited Control (Probably greater than 10)	Low	• Pond size prohibits odor control • Low noise/enclosable equipment • Covered facility not feasible

Notes:
1) Based on Los Osos Wastewater Management Plan Update (Ripley Pacific Team, 2006).
2) Based on Final Project Report (Montgomery Watson Americas, 2001).
3) TRI-W site was 8 acres. However, a significant portion of the space is necessary for community amenities. Acreage estimated is for general MBR facility to be consistent with extended aeration MLE and other alternatives.
4) Processes evaluated are not acceptable for extremely low nitrogen levels required for creek discharge and groundwater injection. A process such as Bardenpho Aeration would be required to achieve sufficient nutrient removal.
5) Costs are relative to an Extended Aeration MLE facility. Conceptual level costs will be developed as part of the detailed evaluation process.
6) Estimated acreage not presented in previous studies. Estimate is based on information from the Wallace Group.

The following provides the basis for selection of the biosolids alternatives for further evaluation.

- Class A biosolids production should include composting. Other options for long-term Class A production and management would pose a significant acceptance risk.
- Due to a local ordinance, non-composted Class A biosolids must either be hauled off-site or land applied at a regional location. The transportation costs and tipping fees do not favor hauling Class A over that of Class B. Therefore, there is no perceived benefit to the production of non-composted Class A biosolids.
- Alkaline stabilization will not be pursued due to the likely difficulties associated with regulatory approval and mitigation requirements while limiting the biosolids market.

Several key issues need to be examined during the detailed evaluation process to fully evaluation potentially viable solids treatment and disposal alternatives. The issues may have a significant impact on costs, future flexibility, acreage requirements, and/or other project components. Key issues include:

- Confirmation of projected biosolids production
- Impact and treatment technology on solids treatment requirements
- Future flexibility and options
- Impact on odor control requirements
- Life-cycle costs
- General benefit alternative impacts including acreage requirements
- Land requirements/impact on site selection

TS.5 TREATMENT FACILITY SITING ALTERNATIVES

The treatment alternative sites that have passed rough screening are listed in Table TS.4. The remaining properties are all located outside of the Los Osos urban area east of Los Osos Creek on properties used primarily for agricultural operations. Because the agricultural value of these properties, the screening criteria favored sites comprised of less productive farmland, which is generally located on the ridge east of the prime agricultural soils located along the alluvial plain adjoining Los Osos Creek. There is one exception: the northerly portion of the Gorby property, which is also prime agricultural land. However, a treatment facility may be located in place of existing buildings.

TS.6 COLLECTION SYSTEM ALTERNATIVES

Table TS.5 is a summary of collection system alternatives including conventional gravity and STEP/STEG systems evaluated in previous reports. The table includes qualitative information on advantages/disadvantages and operations and maintenance issues. These alternatives will all pass the rough screening.

Table TS.4 Treatment Facility Siting Alternatives
Los Osos Wastewater Project Development
San Luis Obispo County

Property	APN	Acre-age	Description/ Topography	Proximity to Collection Area and Disposal Sites	Advantages	Disadvantages
Cemetery Property	074-222-014	48.1	Rectangular parcel that slopes gently downward to the north; westerly boundary slopes downward to the west to a dirt road that provides access to surrounding farming operations; southerly third of the site is used for a cemetery, about 7 acres in the northwest corner is cultivated with row crops, with the remainder fallow; no trees, or other natural features; useable portion of site is about 22 acres.	Useable portion of site is within one eighth mile of LOVR Site appears large enough to support some level of on-site disposal	Effective size of the site (about 22 acres) is sufficient to accommodate a wide range of treatment technologies and on-site disposal Accessible from LOVR via intersection with Clark Valley Road No apparent habitat value No known private easement constraints Topography may allow for screening from LOVR Close to service area Less prime farm land, no LCA contract No potential for flooding.	Archaeological resources on property Close to cemetery and closer to residences to the west Expansion plans of cemetery are unknown and may affect availability Los Osos fault may be present Expansion plans for cemetery unknown
Giacomazzi	067-011-022	37.1	Rectangular parcel that slopes gently downward to the north and east toward an ephemeral drainage that extends along the easterly portion of the site to Warden Lake (offsite); collection of farm-related buildings along the western border; level areas have been cultivated with row crops (irrigation?); numerous tall trees around the buildings and in the drainage channel; useable portion of site is about 20 acres.	Useable portion of site is within one eighth mile of LOVR Site appears large enough to support some level of on-site disposal	Effective size of the site (about 20 acres) is sufficient to accommodate a wide range of treatment technologies and on-site disposal Accessible from LOVR via intersection with Clark Valley Road No known private easement constraints Topography may allow for screening from LOVR Close to service area Less prime farm land, no LCA contract More removed from receptors and visibility from LOVR.	Ephemeral drainages may pose drainage issues with design and may support sensitive biological resources Archaeological resources may extend onto property from the south Los Osos fault may be present Requires access over intervening properties.
Andre 2	067-031-011	9.87	Narrow, triangular shaped parcel bordering LOVR; site slopes gently downward to the north; one small building; access provided from adjacent parcel in common ownership; one group of large trees that follows an ephemeral drainage that crosses the northerly portion of the site; useable area of site is about 9 acres, but narrow triangular shape limits development flexibility.	Most useable portion of site is adjacent to LOVR Site appears too small and irregularly shaped to support on-site disposal	Directly accessible from LOVR No known private easement constraints Topography may allow for screening from LOVR Slightly farther from service area but abuts LOVR Less prime farm land, no LCA contract More removed from receptors No known archaeological resources	Effective size (about 9 acres) and triangular shape may limit the types of treatment and/or disposal technologies. Useable portion of site is fairly visible from LOVR. Ephemeral drainage may support some habitat value. Vehicle speeds on LOVR are high in this area, which would likely require channelization (east-bound left turn lane, west-bound deceleration lane) for vehicle access.
Morosin /FEA	067-171-084	81.2	Irregularly shaped parcel located south of LOVR on the east side of Clark Valley Road at the base of the Irish Hills; southerly half of the site slopes upward into the foothills and is composed of native vegetation; northerly half of site is relatively flat and has been cultivated with row crops; site contains a church with parking and access road on a small knoll at the northerly border of the site; cluster of ag-related buildings located at the base of the foothills; water tank is located about 100 meters upslope from the ag buildings; useable area of site is about 35 acres.	Useable portion of site is within one half mile of LOVR Site appears large enough to support some level of on-site disposal	Effective size of the site (about 35 acres) is sufficient to accommodate a wide range of treatment technologies and on-site disposal Accessible from LOVR via intersection with Clark Valley Road Less visible from LOVR which may reduce need for screening Less prime farm land, no LCA contract More removed from receptors No known archaeological resources No flooding issues	Los Osos fault may be present Somewhat farther to service area than other sites Church and housing located on property Sensitive biological resources upslope to the south PG&E electrical transmission line easement affects the westerly 420 feet of site where buildings would not be allowed.
Branin	067-011-020	42.2	Irregularly shaped lot north of LOVR and adjacent to Warden Lake which consists of native wetland and riparian vegetation; site slopes to the north toward Warden lake and contains two ephemeral drainages; useable portion of the site appears to be periodically cultivated and consists of 15 - 25 acres.	Useable portion of site is about two-thirds mile from LOVR, but appears to have no improved access Site appears large enough to support some level of on-site disposal	Effective size of the site (about 15 - 25 acres) is sufficient to accommodate a wide range of treatment technologies and some on-site disposal Topography may allow for screening from LOVR Less prime farm land, no LCA contract More removed from receptors and visibility from LOVR	Ephemeral drainages may pose drainage issues with design and may support sensitive biological resources Site drains toward Warden lake, a tributary of Los Osos Creek Los Osos fault may be present Northerly portion of site (Warden Lake area) is subject to flooding Subject to agricultural preserve Requires access over intervening properties
Gorby	074-225-009	51.7	Irregularly-shaped lot located south of LOVR adjacent to the east side of Los Osos Creek; southerly half of the site slopes upward into the foothills of the Irish Hills and contains native vegetation; the north-westerly portion is level and contains a dwelling and equestrian facilities that include horse paddocks and riding areas. Several ornamental trees occupy the northwesterly portion of the site; level buildable portion of the site is triangular and consists of about 20 – 25 acres.	Useable portion of site is about two-thirds mile from LOVR with access provided by unimproved road which also serves the intervening agricultural operations Site may be large enough to support some level of on-site disposal, including creek discharge	Buildable area of the site (about 6 - 8 acres) is sufficient to accommodate some of the treatment technologies May be accessible from LOVR Less visible from LOVR	Los Osos fault may be present Los Osos creek is subject to flooding Buildable area is Class I agricultural land and subject to agricultural preserve unless currently developed area used (6 - 8 acres) Sensitive receptors to the west of creek Vehicle speeds on LOVR are high in this area, which would likely require channelization (west-bound left turn lane, east-bound deceleration lane) for vehicle access; Creek and upland area support sensitive biological resources Known unwilling seller
Robbins 1	067-031-037	41.1	Mostly rectangular-shaped lot abutting the north side of LOVR east of Clark Valley Road; site contains at least one dwelling and slopes to the north toward Warden Lake; large mature trees surround the farm buildings; site may be used for grazing; buildable portion of the site is about 30 acres.	Site abuts LOVR and appears large enough to support some level of on-site disposal	Effective size of the site (about 30 acres) is sufficient to accommodate a wide range of treatment technologies and on-site disposal Directly accessible from LOVR No known private easement constraints or archaeological resources Topography may allow for screening from LOVR Less prime farm land, no LCA contract More removed from receptors and visibility from LOVR	Site drains toward Warden lake, a tributary of Los Osos Creek Los Osos fault may be present Northerly portion of site (Warden lake area) is subject to flooding Vehicle speeds on LOVR are high in this area, which would likely require channelization (east-bound left turn lane, west-bound deceleration lane) for vehicle access Furthest property east of service area
Robbins 2	067-031-38	43.5	Mostly rectangular-shaped lot abutting the north side of LOVR east of Clark Valley Road; site slopes to the north toward Warden Lake; site may be used for grazing; buildable portion of the site is about 35 acres.	Site abuts LOVR and appears large enough to support some level of on-site disposal	Effective size of the site (about 35 acres) is sufficient to accommodate a wide range of treatment technologies and on-site disposal Directly accessible from LOVR No known private easement constraints or archaeological resources Topography may allow for screening from LOVR Less prime farm land, no LCA contract More removed from receptors and visibility from LOVR	Less level than other sites; undulating topography. Site drains toward Warden lake, a tributary of Los Osos Creek Los Osos fault may be present Northerly portion of site (Warden lake area) is subject to flooding Vehicle speeds on LOVR are high in this area, which would likely require channelization (east-bound left turn lane, west-bound deceleration lane) for vehicle access Second furthest property east of service area

Note: All of the above sites pass through rough screening.

Table TS.5 Collection System Alternatives
Los Osos Wastewater Project Development
San Luis Obispo County

Collection System	Advantages	Disadvantages	Operations & Maintenance Issues
Conventional Gravity	• Limited infrastructure and construction disturbance to individual properties • Reserve hydraulic capacity • Power required only at pump stations • Designed as part of Tri-W project • No proprietary technology	• Several lift stations required • Deep excavations for pipe installation • Requires larger pipes and manholes • Significant I/I	• Lift stations must be maintained • Reduced septage handling
STEP/STEG	• May utilizes existing septic systems if in acceptable condition (no off-site pump stations required) • Shallow excavation for pipe installation • Small pipes and no manholes • Minimal I/I	• Significant infrastructure and construction disturbance to individual properties (septic tanks are typically replaced because of I&I and previous studies have estimated 85 to 100% of tanks to be replaced) • Dedicated power supply required at individual properties • Limited hydraulic capacity	• Recurring disturbance to inspect and maintain septic tanks and pumps on individual properties (Blanket easement likely required) • Increased septage handling • Privatization option may reduce costs • RWQCB may impose monitoring system and additional maintenance requirements not accounted for in previous studies/estimates
Vacuum	• Limited infrastructure and construction disturbance to individual properties • Shallow excavation for pipe installation • Small pipes and no manholes • Minimal I/I • Power only required at the vacuum stations	• Only one manufacturer of vacuum systems (AIRVAC) • Collection chambers and several vacuum stations required • Limited hydraulic capacity	• Vacuum stations and interface valves must be maintained • Reduced septage handling
Low Pressure	• Minimized clogging because of grinder pumps • Shallow excavation for pipe installation • Small pipes and no manholes • Minimal I/I	• Significant infrastructure and construction disturbance to individual properties • Primary and back-up power supply required at individual properties • Limited hydraulic capacity • Lift stations may be required	• Recurring disturbance to maintain pumps and power source on individual properties (Blanket easement likely required) • Reduced septage handling • Privatization options to be investigated
Combined (Gravity/Vacuum/Low Pressure)	• Can optimize technology for localized conditions • Previously designed gravity system serves as design basis	• Similar to individual collection systems • Non-uniformity of design and construction	• Multiple techniques required to operate and maintain system

Note: All of the above sites pass through rough screening.

TS.7 NEXT STEPS

The objective of this report was to perform a rough screening of alternatives for project components including those considered previously. The primary purpose of the rough screening wasis to develop a “short-list” of component alternatives and eliminate components that have fatal flaws or significantly problematic challenges that make permitting, funding and/or construction of the alternative unlikely.

The next steps (termed the detailed evaluation) are as follows:

- Fine screening of components passing rough screening.
- Combine components into potentially viable project alternatives.
- Develop and evaluate potentially viable project alternatives.
- Prepare the viable project alternatives report.

The development of final viable project alternatives will be accomplished through 1) a draft report that is circulated to the Technical Advisory Committee for a pro/con evaluation and other agencies for review and comment, and 2) a final report, which will be presented to the Board of Supervisors for consideration prior to the Board’s direction to proceed with a Proposition 218 vote.

Chapter 1

INTRODUCTION

The community of Los Osos, California is located on the coastline of Central California adjacent to the Morro Bay State and National Estuary. This area has no year round surface water source. Consequently, the community relies on the underlying groundwater for its drinking water. The community also relies primarily on privately owned septic tanks for wastewater treatment and disposal. As a result, the groundwater in the aquifer underlying the community has become contaminated with nitrate. In order to address this problem, the Regional Water Quality Control Board requires a community wastewater collection and treatment project to be implemented, an effort that is currently being led by the county of San Luis Obispo. This report provides a rough screening of the project components for the anticipated project. Presented in this chapter are the project problem statement; the rough screening objectives; the approach to work; project considerations; and the basis of project.

1.1 PROBLEM STATEMENT

Decades of use of the septic tanks have contributed to a build up of nitrate and other wastewater-derived contaminants in the groundwater. Several of the upper aquifer drinking water wells have had to be abandoned due to exceedance of nitrate levels for drinking water standards. Los Osos Creek, which borders the community on the east and north sides, is impaired by nutrients. Morro Bay, which borders the community on the west side, is impaired by pathogens.

In an effort to curb the groundwater and resulting surface water pollution, the California Regional Water Quality Control Board Central Coast Region (RWQCB) has required the community to construct a collection system and wastewater treatment plant. In 1983, the RWQCB passed Resolution No. 83-13 that “revises Chapter 5 [of the Central Coast Basin Plan] to add a prohibition of individual and community waste disposal systems in the Los Osos/Baywood Park area of San Luis Obispo County, effective November 1, 1988”. Several wastewater treatment projects have been planned for Los Osos over the last thirty years to address this RWQCB resolution, but none have been implemented. Los Osos is in violation of several RWQCB time schedule orders for construction of wastewater treatment facilities and as a result, some property owners have been issued Cease and Desist Orders.

On September 20, 2006, the Governor of California signed Assembly Bill 2701, which “authorize[s] the County of San Luis Obispo to design, construct, and operate a wastewater collection and treatment project that will eliminate these discharges, particularly in the prohibition zone, to avoid a wasteful duplication of effort and funds, and to temporarily prohibit the Los Osos Community Services District from exercising those powers.”

This report was assembled to assist the County in implementing a plan to collect, treat, and dispose of (or reuse) Los Osos' wastewater. The report provides a rough screening of project component alternatives.

1.2 ROUGH SCREENING - STEP 1 OF ALTERNATIVES ANALYSIS

At its June 19, 2006 hearing, the County Board of Supervisors adopted Project Objectives and Strategies for its involvement in the Los Osos Wastewater Project. The objectives and strategies were presented as being essential for managing County taxpayer risk and for creating the highest probability for a successful project. As part of the objectives and strategy statement, the County identified the following scope steps for the development and selection of Viable Project Alternatives:

1. Analysis of Viable Project Alternatives should include previously considered and newly considered conventional technologies for each of the project components (collection system, treatment technology, treatment sites, solids handling, and disposal).
2. Property owners within the affected area will demonstrate their willingness to fund, through property assessments, the cost of this project via Proposition 218 ballots. The Proposition 218 assessment proceedings will be based on the assessment engineer's evaluation of "special benefits" which will include consideration of the short list of Viable Project Alternatives (VPAs) for the project.
3. County staff will confer with District Board on developing water management objectives for alternatives review.
4. The review of Viable Project Alternatives will utilize a technical advisory committee (TAC) with representation from community and the District.
5. A community advisory referendum will be conducted to determine the community's preferred project alternative.
6. County Board of Supervisors will make the final site and technology determination while considering community advisory votes.

This rough screening report is Step No. 1 in the analysis of Viable Project Alternatives. It is intended to describe the overall results of reviewing prior project reports and identifying those project technologies that should be studied in further detail as alternatives to the "Tri-W" project that was previously developed by the Los Osos Community Services District.

1.2.1 Previous Project (Tri-W)

The previous project at the Tri-W site will be carried through fine screening process for comparison purposes. While a significant portion of the community did not find the project acceptable, the Tri-W project remains a viable project, since it already met the basis of

evaluation of being permitable, constructible and fundable. Elimination of Tri-W prior to the completion of work under the California Environmental Quality Act (CEQA) and the approval of a “Notice of Determination” by the Board of Supervisors could cause the County’s process to violate CEQA. Consequently, the County’s process is intended to adhere to legal requirements as well as provide alternatives to the Tri-W project.

1.2.2 Environmental Considerations and the California Environmental Quality Act (CEQA)

Overall, the development of Viable Project Alternatives will also include review of environmental considerations. Formal updates to existing environmental reports, such as a Supplemental Environmental Impact Report (SEIR), will occur after the results of the Proposition 218 assessment vote. The County’s adopted strategies express the intent to conduct additional evaluations and determinations that may be required under the California Environmental Quality Act (CEQA) after the Proposition 218 proceedings so that the Proposition 218 proceedings reflect a funding decision by the community and not a project selection decision. A review of the CEQA Guidelines result in the following key conclusions:

- The project is exempt under the "general rule" provision embodied in §15061(b)(3), which states, in part, that CEQA only applies to "projects."
- The action being undertaken does not qualify as a project based on the definition exclusions set forth in §15378(b)(4) which state that a "project" does not include: "the creation of governmental funding mechanisms or other government fiscal activities which do not involve any commitment to any specific project which may result in potentially significant physical impact on the environment.”

By conducting the Proposition 218 vote based on funding alone, the Proposition 218 proceedings is not defined as a project under CEQA.

In the final CEQA analysis, the County will also consider whether any “regional” approaches to components of the project may be more cost effective and otherwise more beneficial than a project that is solely a “community project.” As discussed in Section 1.3.1, three regional approaches will be considered during the County’s final project selection process:

- Will wastewater treatment through a *regional* approach, specifically in cooperation with the City of Morro Bay and the Cayucos Sanitary District be more cost effective than a treatment facility constructed specifically for the community of Los Osos, which will necessarily also need to consider the overall water balance for Los Osos?
- Will importing of *regional* water supplies (State Water or Nacimiento Water) be more cost effective than constructing and operating the disposal components of a community wastewater project that would otherwise be necessary to obtain a water balance for Los Osos?

- Will constructing sufficient capacity in the treatment and disposal components of the wastewater facility to accommodate *regional* sludge and septage treatment and disposal be cost effective and result in a reduction of overall wastewater costs to the community by adding revenues from other areas of the County?

1.2.3 Public Input and the Technical Advisory Committee (TAC)

The County's adopted project strategies include a TAC, which is scheduled to be appointed by the Board of Supervisors near the same time as the publication of this rough screening report. The TAC's primary responsibility is the review and development of pro's and con's of the project alternatives. The TAC will also serve as the forum to review public comments on this rough screening report and the development of the Viable Project Alternatives.

The TAC is not intended to recommend a specific project alternative since the community advisory survey and votes from residents, property owners and business owners is intended to provide the Board of Supervisors with guidance on the community's overall project preferences. The County intends to develop the community survey in such a manner to understand the community's overall preferences. For example, while there may be some community opposition to importing water from the State Water Project or the Nacimiento Water Project to obtain a water balance, it is important to understand whether the community might support importing of water if it is more cost effective than utilizing treated wastewater to obtain a water balance. Likewise, including septage and sludge facilities that can treat and dispose of regional needs may be unacceptable to some unless the additional revenues from the regional customers can reduce the costs of the wastewater project to the community. In addition to these examples, the community's preferences on site location and project technologies will be important in the final project selection process.

Prior to seeking the Board of Supervisors direction to proceed with the Proposition 218 proceedings, County staff will make recommendations to the Board on how the community advisory survey should be approached.

1.2.4 Proposition 218 Assessment Proceedings and Property Owner Vote

The primary goal of the wastewater project is to comply with the Waste Discharge Requirements (WDRs) that are imposed on the community by the RWQCB. So, while the development of Viable Project Alternatives will focus on technologies that meet RWQCB requirements, the development of Viable Project Alternatives will also include cost estimates and other information prepared in a manner to provide a basis for the Project Assessment Engineer to analyze the special and general benefits of a community wastewater project. The County's proposed assessments will be subject to Proposition 218 assessment proceedings and a property owner ballot process pursuant to Article XIIID of the California State Constitution. The assessments will not be a based on a single (selected) project alternative, but instead will be based on the evaluation of the Viable

Project Alternatives, their special benefits, and other information that is available and relevant to the assessment engineer. The costs of special and general benefits of viable project alternatives are illustrated in Figure 1.1.

The details of the assessment engineering issues will be included in the assessment engineers report and will only be referred to generally in this rough screening report and in the fine screening report on project alternatives. Nevertheless, the County adopted policies and strategies from June 19, 2006 identify the intent for the Proposition 218 assessment proceedings to act as a funding decision, consistent with the "right to vote on taxes act" but not as a project selection decision.

Aside from Proposition 218 and CEQA requirements, it is the intent of the project's alternatives evaluation to identify those community wastewater projects that the County believes it can obtain permits, fund and construct in a reasonable period of time for the community as options for solving the long-standing wastewater contamination. The development of the Viable Project Alternatives will therefore include more detailed information than what is included in this rough screening report – information that we believe is important for the community to understand and which will be relevant in the project's final selection process.

Information that will be prepared in the development of Viable Project Alternatives will also include the following:

- Total cost information
  - Estimated Capital Costs
  - Estimated Debt Service Costs
  - Estimated Operation and Maintenance Costs
  - Estimated Facilities Replacement Costs

- Life Cycle Cost Analysis with Bottom Line Impact on Estimated Monthly Household Costs
  - Years 1-5
  - Years 6-10
  - Years 11-15
  - Years 16-20
  - Years 21-30

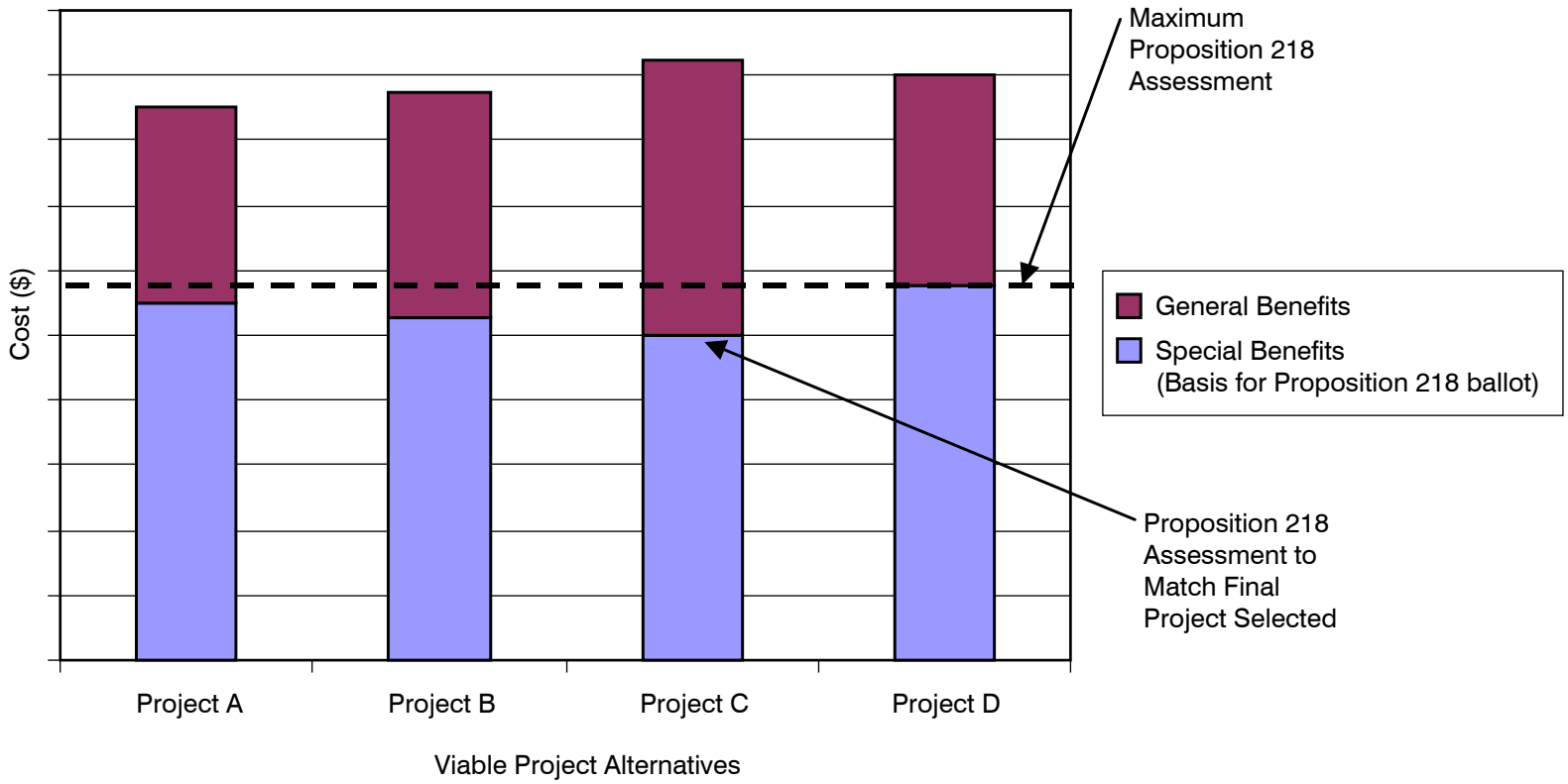

This figure is illustrative of how viable project alternatives will be analyzed into “general benefits” and “special benefits” components. Special benefits are project components that specifically address the RWQCB WDR and the minimum threshold criteria for making a project permitable, fundable, and constructable. General benefits are project components that benefit the community as a whole. The Proposition 218 election will be a funding decision for the special benefits portion of the project.

Figure No. 1.1
GENERAL AND SPECIAL BENEFITS OF VIABLE PROJECT ALTERNATIVES
LOS OSOS WASTEWATER PROJECT DEVELOPMENT
SAN LUIS OBISPO COUNTY

Los207f2-7630.ai

1.3 APPROACH TO WORK

This rough screening report includes evaluation of alternatives for the five major project components:

- Effluent Disposal/Reuse
- Treatment Technology
- Solids Treatment and Disposal
- Treatment Plant Siting
- Collection System

Alternatives for each of these components will be considered separately. The alternatives passing through this rough screening will then undergo a due diligence evaluation. During the fine screening phase of work, the rough-screened project components will be combined into potentially viable project (PVP) alternatives that are permitable, constructible and fundable. Also as part of the fine screening, these PVP alternatives will be compared and screened down to the final viable project alternatives to be carried forward. The Technical Advisory Committee (made up of members of the community) will provide review and input to the development of projects and in the screening of the PVPs to the final alternatives. The overall process for developing viable project alternatives is illustrated in Figure 1.2.

The basis of evaluation for the rough screening of the project components listed above includes:

- Fatal Flaw Analysis - An alternative will be removed from consideration if it has a characteristic that will clearly impede its implementation, from either a cost, regulatory, institutional or technical standpoint.
- Elimination of Redundancy - An alternative will be removed from consideration if it is equivalent to the alternative that has already been developed for the Tri-W project.
- Removal of Equivalent Components - A project component will be removed from consideration if there is an alternative component that is clearly superior in one respect, even if they are otherwise comparable.

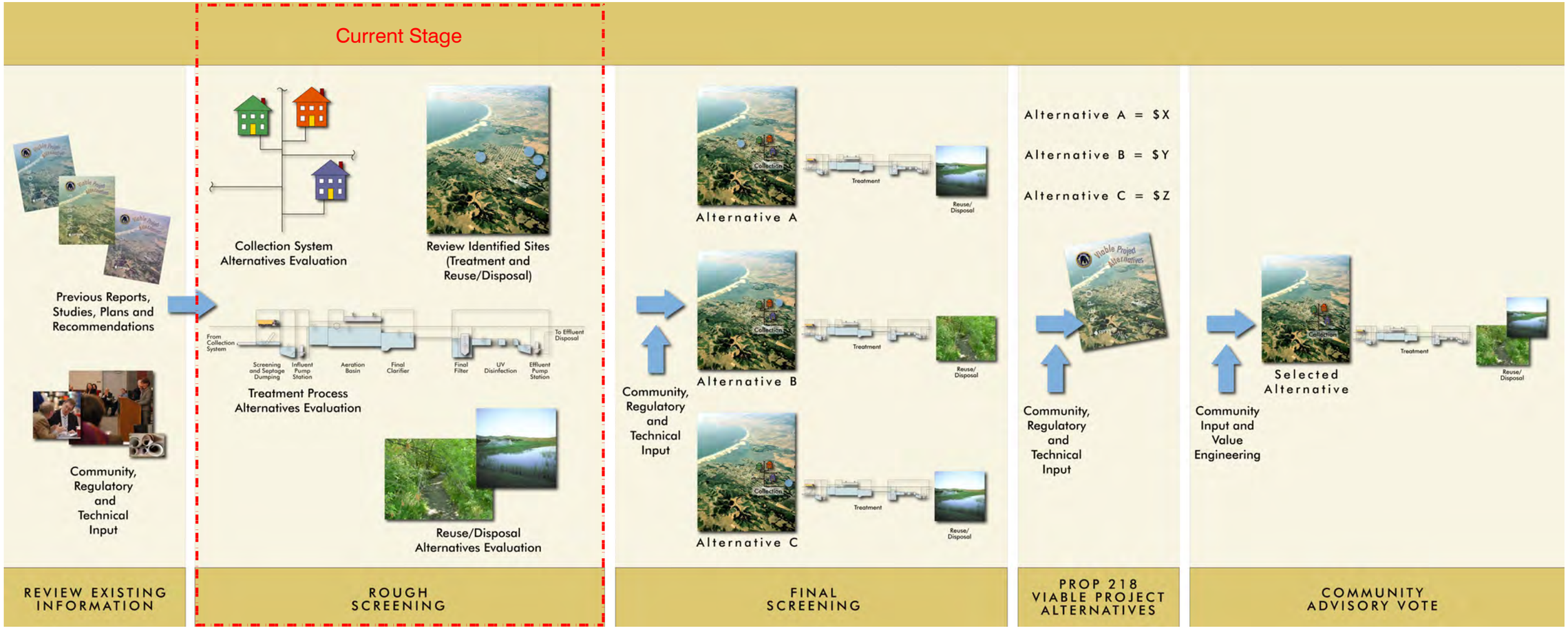

The County has identified a 5-step process to select a viable project alternative. This figure illusttrates the current stage of the project, which is the rough screening.

Figure No. 1.2
VIABLE PROJECT ALTERNATIVE DEVELOPMENT
LOS OSOS WASTEWATER PROJECT DEVELOPMENT
SAN LUIS OBISPO COUNTY

Los207f1-7630.ai

1.3.1 Alternatives That Are Not Under Consideration for Rough Screening

The following project components will not be considered in this report for the viable project alternatives:

Regional Treatment / Ocean Outfall: The amount of time that would be required to coordinate several local municipalities to create a new regional treatment facility would likely exceed the time limits imposed by the RWQCB for solving Los Osos' wastewater problems. Additionally, the Coastal Commission may be unwilling to permit a regional facility that discharges via an ocean outfall. As previously discussed, a regional option will nevertheless be addressed by the County during its CEQA efforts and the alternatives efforts required therein.

Importation of Water: Importing water to reduce Los Osos' dependence upon groundwater withdrawals is not under consideration for this rough screening analysis. However, the County supports evaluating imported water in a manner comparing it to the disposal methods developed as components of Viable Project Alternatives, and believes that this analysis should be prepared in cooperation with the community water purveyors. As previously discussed, this regional water supply option will be addressed by the County during its CEQA efforts and the alternatives efforts required therein.

Regional Receiver Site for Septage/Sludge: While there is a need in the County for a local septage receiving station, it will not be considered in this rough screening process. The evaluation of a septage receiving station at Los Osos will include the cost and environmental impacts and whether it is in the best interest of Los Osos to construct regional facilities. The potential benefits of greater cost sharing for the wastewater project, which could develop countywide revenues and reduce costs to Los Osos, will need to be weighed against the additional costs of regional facilities and other impacts such as additional truck traffic in community.

1.4 PROJECT CONSIDERATIONS

1.4.1 Previous Efforts

There is a long history of wastewater project plans for Los Osos. In the late 1990s, San Luis Obispo County led a Los Osos wastewater project, as described in their 1998 Facilities Plan. This project was cancelled upon the formation of the LOCSD and its assumption of responsibility for Los Osos' wastewater project development. In 2005, the LOCSD began construction on a wastewater plant located at the Tri-W site based on the Wastewater Facilities Project Final Project Report (Montgomery Watson Americas, March 2001). Shortly after the initiation of construction there was a recall vote where several LOCSD board members were replaced and construction was subsequently halted with only a small percentage of the project completed. In 2006, the new LOCSD board examined an

alternative plan, the Los Osos Wastewater Management Plan Update (Ripley Pacific Company, July 2006), whose key features were a STEP collection system and the recycling of treated effluent. In the meantime, however, the State Legislature was considering special legislation and the LOCSD filed for bankruptcy protection from its creditors. As a result, on January 1, 2007, responsibility for the project was transferred back to the County by State Assembly Bill AB2701. This screening report is part of the current County-led effort to develop options for a community wastewater project.

1.4.2 NWRI Final Report

The LOCSD solicited an independent review of the Los Osos Wastewater Management Plan Update (Ripley Pacific Company, July 2006) by the National Water Research Institute (NWRI) of Fountain Valley, California. The NWRI convened a high-level review panel that released the review on December 4, 2006. Their key findings of the independent review included the following:

- The first priority of the project must remedy the existing water pollution control problems. Secondary priorities may be incorporated to address other water management issues, including effluent reuse and addressing saltwater intrusion.
- The solution to the saltwater intrusion problem should have lower priority relative to the resolution of wastewater compliance issues.
- The STEP/STEG system is a well-developed technology and is a viable alternative to the gravity collection system.
- Regardless of which type of collection system is selected, consideration should be given to the use of vacuum sewers in low-lying areas along Morro Bay.
- Given the number of problematic issues with the downtown site, it is the unanimous opinion of the Panel that an out-of-town site(s) is a better alternative.
- If an out-of-town site is selected, a return line of recycled water that could be used for various applications within the community should be considered as part of an initial phase.
- The least costly and most easily implemented solution would involve appropriate treatment out-of -town with land application (with spray irrigation).
- Regardless of the type of treatment process selected, the process should be designed to allow for nitrogen removal, if needed.
- If the Broderson site is used for effluent disposal, it is important to evaluate compliance with the new DHS Groundwater Recharge Reuse criteria.
- Winter storage is required for land application, as well as for zero-discharge of effluent.

- Discussions should be undertaken with the Coastal Commission to ensure that existing permits can be amended rather than applying for new permits.
- Completion of the wastewater management plan is an integral component in the development of the integrated water management plan.

1.4.3 RWQCB Feedback

The primary goal for the project will be to comply with future WDRs. The viable project alternatives will be developed with input from the RWQCB to ensure that any project alternatives proposed meet this goal. The County has met with the RWQCB staff as part of this rough screening process to get their early input into requirements that are likely to be imposed.

1.4.4 SWRCB Discussions

One of the goals for this project will be to evaluate the advantages and disadvantages of reestablishing State Revolving Fund (SRF) loans for this project. As part of the SRF process, the SWRCB will review plans and specifications and provide conditions for the project funding. The County has reinitiated discussions with the SWRCB about some of the unique elements of this project to begin understanding what conditions it may impose.

1.5 BASIS OF PROJECT

1.5.1 Flows and Load

Current and projected future wastewater flow and load projections establish the basis for collection system and treatment plant sizing. The Wastewater Facilities Project Final Project Report (Montgomery Watson Americas, March 2001), the Los Osos Wastewater Project Revised Project Report (Montgomery Watson Harza, March 2003) and the Los Osos Wastewater Management Plan Update (Ripley Pacific Company, July 2006) included estimates for these parameters. The rough screening incorporated these previous load estimates, but updated the flow estimates to take into consideration advances in water conservation over the past few years.

1.5.1.1 <u>Flow Estimates</u>

Population Estimates

The previous reports by Montgomery Watson Americas, Inc. (2001) and Ripley Pacific Company (2006)) used population estimates provided by the Los Osos Wastewater Committee. The estimates were based on the 1990 census and knowledge about existing and future development. The buildout population to be served by the future wastewater treatment facility was estimated to be 18,428 people. While there is little formal documentation to support these projections, they are consistent with the General Plan projections for Los Osos minus the areas outside the prohibition zone.

Water Usage

The LOCSD and the Golden State Water Company (Golden State), together provide water to more than 95 percent of the population to be served by a future wastewater treatment facility. Over the past decade, both the District and Golden State have encouraged water conservation measures. They have each provided low-flow showerheads to customers, and the District has distributed water conservation retrofit kits and has instituted rated increases for their customers' water bills. In a rated increase billing system, customers are charged more per unit of water with increasing total water usage per billing cycle.

Montgomery Watson Americas, Inc. (2001) based its water usage rates on reported rainy-season potable water volumes delivered to residences in the relevant communities. They cited a Los Osos plan to reduce domestic water usage by 8 gallons per capita per day (gpcd) through water conservation methods. These measures would reduce indoor consumption from 77 gpcd, which they estimated was the usage rate during the 1990s, to 69 gpcd. This latter figure was used in the 2001 report to estimate wastewater treatment plant capacity. Ripley Pacific Company (2006) based their water usage rate of 70 gallons per person per day (gpcd) on prior studies that they did not cite.

For the current project, projections were updated based on current water use by District customers. Winter wet weather domestic water flows were assumed to be roughly equal to wastewater flow rates as outdoor irrigation usage is at a minimum. This approach is consistent with the approach used previously by Montgomery Watson Americas Inc. (2001). The flow data from January to May 2006 was selected for analysis since those months had significant rainfall. Flow data from previous years was not used because 2006 is the year that best reflects current water conservation levels. Table 1.1 summarizes the water use rates in early 2006 for the District customers.

Table 1.1 2006 Water Use Estimate for the District
Los Osos Wastewater Project Development
San Luis Obispo County

Month	Precipitation (inches)	Gallons Billed	Water Usage (gpcd)[1]
January	4.16	14,860,600	56
February	0.99	21,122,300	89
March	3.89	15,917,600	60
April	2.15	17,301,500	68
May	0.96	14,582,600	55
			Average: 66

Notes:

1) Based on population served by LOCSD, estimated at 8,500

Water Usage = Gallons Billed / Population

Records for Golden State were unavailable, but Montgomery Watson Americas, Inc. (2001) estimated that during the 1990s, water use for Golden State users was approximately 65 gpcd. It is reasonable to assume that this usage has not increased over the past decade, due to the building moratorium and to water conservation measures, therefore 65 gpcd serves as a conservative water use estimate. Additionally, since the types of homes that are served by the District and by Golden State are generally similar, it is reasonable to assume that their water usage rates will be approximately the same.

Using these figures for the District and Golden State water customers, indoor domestic water consumption was estimated to be 65 gpcd. **Therefore, 65 gpcd will be the per capita use factor in sizing facilities for this project.**

Inflow and Infiltration (I/I)

In its report, Montgomery Watson Americas Inc. (2001) used previous experience to assume that the main source of I/I for a STEP/STEG system would be from the septic tank itself and its connections to the dwelling, which is not usually watertight. Dry weather I/I flows would come from irrigation (approximately 2 gpcd). Wet weather I/I flows would be much higher (approximately 16 gpcd). Montgomery Watson Americas' calculations assumed a population density of 2.5 persons per dwelling.

With new septic tanks where drains and runoff are diverted away from the area around the tank, the I/I presumably would be lower than these estimates. Additionally, I/I into the tank will be retained there and will not immediately translate into peak flows to the treatment plant.

For a conventional sewer system, I/I would be mostly due to defects in the collection system. Montgomery Watson Americas, Inc. used standard collection system textbook models to estimate the I/I (during dry and wet weather) per mile per inch diameter of pipe. They divided the total predicted I/I of the system by the estimated population in order to calculate the projected I/I per capita. During dry weather, they projected that I/I would be similar for conventional systems to STEP/STEG systems. During wet weather, they gave a conservative estimate for a conventional system I/I of 17 gpcd. However, they pointed out that the true value would probably be much lower due to the sandy soils in the region that tend to direct water past a pipe and trench, and due to the presumed water-tightness of a new collection system. Using the textbook models, Montgomery Watson Americas, Inc., anticipated that 7 gpcd would be a more realistic estimate of wet weather I/I.

Ripley Pacific Company (2006) did not include I/I calculations for the various alternative collection systems. The report stated that I/I would be high for a conventional sewer, and negligible for either a STEP/STEG system, or a grinder/vacuum system. The true I/I for a STEP/STEG system will likely be greater than zero, but probably less than the Montgomery Watson Americas estimate for a properly installed and maintained septic tank.

Total Flow

Calculated flows for the future treatment plant using the estimates for population, water usage and I/I are presented in Table 1.2**. The design flow for the treatment facility will be 1.2 MGD in dry weather and 1.3 MGD in wet weather for both gravity and STEP/STEG collection systems.**

Table 1.2 Flow Estimates, 2006 Water Use Estimate Los Osos Wastewater Project Development San Luis Obispo County

Collection System	Population Estimate	Water Use Estimate (gpcd)	I/I (gpcd)		Total (MGD)[4]	
			Wet	Dry	Wet	Dry
Conventional [1]	18,428	65	17 / 7[3]	2	1.5 / 1.3	1.2
STEP/STEG [1]	18,428	65	16	2	1.5	1.2
STEP/STEG or Conventional [2]	18,428	65	0	0	1.2	1.2

Notes:

1) I/I estimates by Montgomery Watson Americas, Inc., 2001. Does not account for retardation of I/I water in septic tank before conveyance to treatment plant, so actual peak flows will be less than these estimates.

2) I/I estimates Ripley Pacific Company, 2006.

3) 17 gpcd is a conservative estimate for wet weather I/I; 7 gpcd is more probable (Montgomery Watson Americas, Inc., 2001).

4) Total = Population x (Water Use + I/I).

1.5.1.2 Load Estimates

The Montgomery Watson Americas Final Project Report (2001) included estimates of influent wastewater quality for a gravity collection system. Estimates were updated in their Los Osos Wastewater Project Revised Project Report Design Documents (Montgomery Watson Harza, 2003), as presented in Table 1.3. These values are considered valid and will be used for treatment facilities sizing for a gravity collection system.

Table 1.3	Projected Characteristics of Wastewater, Gravity Collection System [1] Los Osos Wastewater Project Development San Luis Obispo County		
Parameter	**Units**	**Average Day**	**Peak Day**
BOD	mg/L	340	350
Suspended Solids	mg/L	390	400
Total Nitrogen	mg/L	56	58

Notes:

1) Montgomery Watson Harza, Inc., 2003.

If a STEP collection system is selected, the concentrations of BOD and suspended solids in the treatment plant influent are expected to be lower, due to solids removal and degradation in the septic tanks. Nitrogen concentrations are expected to be unchanged. Estimates for the percentage removal of BOD and suspended solids in septic tanks were obtained from a review of septic tank performance studies (Bounds, T.R. "Design and Performance of Septic Tanks, presented at the American Society for Testing Materials, Philadelphia, 1997). In seven studies, septic tanks reduced BOD by an average of 58% and suspended solids by an average of 78%. In 14 septic tanks fitted with filtering devices, it was estimated in the review that approximately 64% of BOD and 90% of suspended solids were removed. Concentrations of total nitrogen were expected to be unaffected by septic tanks. Using these removal efficiencies and the influent quality listed in Table 1.3, the septic tank effluent quality was calculated and presented in Table 1.4.

Table 1.4	Projected Characteristics of Wastewater, STEP/STEG [1] Los Osos Wastewater Project Development San Luis Obispo County		
Parameter	**Units**	**Unfiltered Septic Tank Effluent**	**Filtered Septic Tank Effluent**
BOD	mg/L	140	120
Suspended Solids	mg/L	80	40
Total Nitrogen	mg/L	56	56

1. Removal efficiencies from Bounds, T.R., 1997.

Since it is likely that new septic tanks will be fitted with filtering devices, the concentrations of wastewater characteristics from filtered septic tank effluent will be used for sizing the treatment facility.

Smaller loads of solids and BOD can reduce the size and cost of the wastewater treatment facility when reducing the concentration of these two constituents is the primary concern. However, nitrogen removal can be inhibited by low BOD because it depends on the presence of a carbon source for the microorganisms that perform this task. In order to ensure nitrogen removal, plant operators may have to add a supplemental carbon source such as methanol to the biological treatment processes, which would increase the cost of treatment.

1.5.2 Regulatory Requirements

Water quality objectives for effluent are spelled out in two WDR Orders previously issued by the RWQCB and dated April 4, 1997 and Feb 27,2003. However, effluent limits for some of the reuse/disposal alternatives under consideration are not addressed by these Orders. Water quality objectives can be anticipated by referring to WDRs issued to other treatment facilities throughout California, and by consulting with the RWQCB. Anticipated effluent limits are further discussed in Chapter 2 for each of the reuse and disposal alternatives.

1.5.2.1 Summary of Water Quality Objectives from Previously Issued Waste Discharge Requirement (WDR) orders

WDR Order No. 97-8

WDR Order No. 97-8 (Central Coast Regional Water Quality Control Board, 1997) was issued on April 4, 1997 in response to a report of wastewater discharge resulting from the previous County plan to build a wastewater treatment facility serving the communities of Cuesta-by-the-Sea, Baywood Park and Los Osos. The wastewater effluent in this plan was to be discharged to 2.1 acres of infiltration basins. The effluent limitations are presented in Table 1.5. Although this is not the current WDR for Los Osos, this WDR outlines the effluent limits that are expected if percolation ponds are selected as a disposal option.

In addition to these effluent limits, the 97-8 WDR imposed limits on 66 chemical inorganic and organic constituents in the groundwater in the vicinity of the discharge. The WDR also stated that concentrations of chemicals and radionuclides must not exceed limits set forth in Title 22, Chapter 15, Articles 4 and 5 by the California Department of Health Services. Besides these chemical constituents, the concentration of total coliform organisms in the groundwater must be less than 2.2 MPN/100 ml and the pH must be between 6.5 and 8.3.

Table 1.5	Effluent Limits from WDR Order No. 97-8 for Percolation Ponds Los Osos Wastewater Project Development San Luis Obispo County		
Constituent	**Units**	**Monthly (30-day) Average**	**Daily Maximum**
Settleable Solids	mL/L	0.1	0.5
BOD_5	mg/L	60	100
Suspended Solids	mg/L	60	100
Total Nitrogen	mg/L	7	10
Dissolved Oxygen	mg/L	Minimum 2 at any time	

The WDR also required the discharger to monitor groundwater upgradient and downgradient of the disposal area to ensure that there is no significant increase in mineral constituent concentrations due to the discharge.

WDR Order No. R3-2003-0007

WDR Order No. R3-2003-0007 (Central Coast Regional Water Quality Control Board, 2003) was issued in draft on February 7, 2003 in response to a report of wastewater discharge resulting from Wastewater Facilities Project Final Project Report (Montgomery Watson Americas, March 2001).

The effluent limits described in this WDR were the same as that in the previous WDR Order No. 97-8, with the exception that there was no minimum limit for dissolved oxygen. It was stated in the WDR that the effluent was to be discharged to leachfields. This WDR outlined the effluent limits that are expected to be implemented if leachfields are selected as a disposal option.

In addition to the effluent limits, the WDR lists limits for recycled water that conform to the description of Title 22 Disinfected Tertiary recycled water. The recycled water quality limits are listed in Table 1.6. The WDR did not list any limits for nitrogen in recognition of nitrogen's use as a nutrient in agricultural or landscaping applications.

Table 1.6	Recycled Water Limits from WDR Order No. R3-2003-0007 Los Osos Wastewater Project Development San Luis Obispo County		
Parameter	**Units**	**Monthly Mean**	**Max**
BOD_5	mg/L	30	90
Suspended Solids	mg/L	30	90
Turbidity	NTU	2[1]	5[2]
Total Coliform	MPN/100mL	7 day median not to exceed 2.2	Not to exceed 23 in more than one sample in any 30-days No sample to exceed 240
pH units In range 6.5-8.4			
Notes:			
1) 24-hr mean value			
2) Turbidity must not exceed 5 NTU more than 5% of the time within a 24-hr period and must not exceed 10 NTU			

1.5.3 Groundwater Management

The Los Osos Valley groundwater basin is the sole source for local municipal, private domestic, and agricultural water supply. Under current basin management practices, seawater intrusion is occurring in the lower aquifer due to excessive production, while groundwater in the upper aquifer is underutilized due to nitrate contamination. The Los Osos wastewater project will collect and redistribute a significant portion of the community's water resources. **The project provides an opportunity to begin the process of mitigating seawater intrusion, reducing nitrate contamination, and setting long-term goals for achieving a sustainable water supply.**

This groundwater management summary has been incorporated into the rough screening report to provide information on the main challenges facing the community water supply and to introduce water balance concepts that will be used during fine screening. The groundwater management issues are further discussed in Chapter 2.

1.6 ROUGH SCREENING REPORT - FOLLOWING SECTIONS

The remainder of the report examines the alternatives for the different project components as follows:

Chapter 2: Alternatives for reuse/disposal of wastewater effluent are examined and screened, and potential sites are considered.

Chapter 3: Alternatives for wastewater treatment are examined and screened.

Chapter 4: Alternatives for biosolids treatment and disposal are examined and screened.

Chapter 5: Alternatives for treatment facility sites are examined and screened.

Chapter 6: Alternatives for the collection system are examined.

Chapter 7: Project components that pass through rough screening are merged with other components in order to eliminate non-viable combinations. Next steps are outlined.

EFFLUENT DISPOSAL / REUSE ALTERNATIVES

2.1 PURPOSE

Presented in this chapter is a review of the alternatives for reuse and disposal of wastewater effluent for the future Los Osos wastewater treatment facility. The disposal/reuse alternative that is selected will dictate the level of treatment required and subsequent size of the facility to provide the treatment needed. Each reuse and disposal alternative has its own site requirements and governing regulations. Additionally, each alternative represents a different range of costs and benefits to the community.

The alternatives considered in this report for reuse and disposal were established based on standard industry practice and previous efforts to provide wastewater disposal in Los Osos, including previous facilities plans prepared by the County, Montgomery Watson and Ripley Pacific. The disposal/reuse alternatives that are under consideration are:

- Unrestricted Reuse (Agricultural and Urban)
- Percolation Ponds
- Leachfields
- Spray Fields
- Surface Water Discharge
- Constructed Terminal Wetlands
- Groundwater Injection

As discussed in Chapter 1, the potential for regional treatment and disposal to the ocean (through use of an existing outfall) were not considered herein, due to the multijurisdictional agreements that would be necessary and the lengthy time required to implement such a plan.

2.2 REGULATIONS AND WATER QUALITY REQUIREMENTS

This section provides an overview of the probable treatment levels required and effluent water quality objectives for the different disposal/reuse alternatives. Effluent water quality limits for wastewater treatment facilities are established by the Regional Water Quality Control Board (RWQCB) in the form of Waste Discharge Requirements (WDRs). Regulations for reuse are also established by California Code of Regulations Title 22. Surface water discharges are regulated by National Pollution Discharge Elimination System (NPDES) permits. Surface water discharges also have additional regulatory constraints such as the California Toxics Rule (CTR), which establishes water quality limits for metals

and organics, and Total Maximum Daily Loads (TMDLs), which can be established to protect impaired water bodies.

Throughout this chapter, the quality effluent is discussed with respect to its level of treatment. These treatment level definitions are summarized in Table 2.1.

Table 2.1 Effluent Treatment Levels
Los Osos Wastewater Project Development
San Luis Obispo County

Treatment Level	Treatment Process	Median Coliforms (MPN/100 ml)
Disinfected Tertiary	Filtered [1] & Disinfected [2]	2.2
Disinfected Secondary - 2.2	Oxidized & Disinfected [2]	2.2
Disinfected Secondary - 23	Oxidized & Disinfected [2]	23

Notes:
1) "Filtered" means an oxidized wastewater that satisfied (a) or (b) below:
   a. Has been coagulated and passed through natural undisturbed soils or filter media with a specified maximum flux rate depending on the type filtration system and does not exceed:
      1. An average of 2 NTU within a 24-hour period,
      2. 5 NTU more than 5 percent of the time within a 24-hour period, and
      3. 10 NTU at any time.
   b. Has been passed through a microfiltration, ultrafiltration, nanofiltration, or reverse osmosis membrane so that the turbidity does not exceed:
      1. 0.2 NTU more than 5 percent of the time within a 24-hour period, and
      2. 0.5 NTU at any time.
2) Disinfected by either:
   a. A chlorine process with a continuous concentration contact time (CT) 450 mg-min/l with a modal contact time $\geq$ 90 minutes (based on peak dry weather design flow).
   b. A process combined with filtration that inactivates and/or removes 99.999% of F- specific bacteriophage MS-2, or polio virus.

Probable effluent limits for the disposal and reuse alternatives were determined through the review of past WDRs for Los Osos and WDRs for other wastewater facilities. These anticipated requirements are summarized in Table 2.2 and discussed in more detail in the following section. While this section outlines probable effluent limits, ultimately it is the prerogative of the RWQCB to impose more stringent limits where they feel it is necessary to protect water quality.

Table 2.2 Anticipated Water Quality Objectives for Disposal/Reuse Alternatives Los Osos Wastewater Project Development San Luis Obispo County

Disposal/Reuse Option	Treatment Level	Suspended Solids (mg/L) monthly mean / daily max	BOD_5 (mg/L) monthly mean / daily max	Total N (mg/L) monthly mean / daily max
Unrestricted Recycled Water Use (Urban or Agriculture) [2, 3]	Disinfected tertiary	30/90	30/90	Varies[1]
Percolation Pond/Leachfield[3]	Disinfected Secondary 23 or 2.2	60/100	60/100	7/10
Spray Field[4]	Disinfected Secondary 23	≤ 30[5]	≤ 30[5]	Varies[1]
Creek Discharge[6]	Disinfected tertiary	≤ 30[5]	≤ 30[5]	2.2 (nitrate-N)
Constructed Terminal Wetlands[7]	Disinfected Secondary 23	≤ 30[5]	≤ 30[4]	≤ 10
Direct Groundwater Injection[8]	Disinfected tertiary	≤ 30	<DO	5/10

Notes:

1) Depends on ability of crops to uptake nitrogen.
2) California Code of Regulations Title 22.
3) Central Coast Regional Water Quality Control Board, 2003 WDR for Los Osos.
4) Central Valley Regional Water Quality Control Board, 2003 WDR For East Bay Municipal Utility District, Pardee Center Wastewater Treatment Facility.
5) 30-day average, as per NPDES requirements.
6) Montgomery Watson Americas, Inc., 2001 and Los Osos Creek TMDL.
7) Central Valley Regional Water Quality Control Board, 2004 WDR for Chester Public Utilities District.
8) California Department of Health Services Groundwater Recharge Reuse July 2003 Draft Regulations.

2.3 EFFLUENT DISPOSAL/REUSE ALTERNATIVES

2.3.1 Unrestricted Reuse

Unrestricted reuse is the practice of using treated wastewater to irrigate landscape and food crops in areas where public access is not restricted. Unrestricted reuse is often used to offset potable water uses. Urban reuse requires tertiary disinfected water. For agricultural reuse, a lower quality is allowed for certain crops. However, based on the crop types grown in this area (vegetables, nursery, fruits) tertiary disinfected water would be required.

Urban Reuse: Urban reuse was considered in Wastewater Facilities Project Final Project Report (Montgomery Watson Americas, March 2001) for irrigation of schools, parks and golf courses. The Final Project Report indicated that there are not nearly enough potential sites for water reuse in the community of Los Osos to accept all of the treated effluent. The irrigation flow for large urban water users was estimated to be 132 acre-feet/year. In terms of residential use of reclaimed water, this would be less costly in new developments compared to existing developments due to the difficulty in retrofitting existing plumbing systems with purple pipe (that conveys reclaimed water). However, approximately half of the water use in Los Osos is for outside irrigation, so although running extensive piping to existing development might be expensive, there is significant potential for water reuse. This alternative will be examined along with other general benefits in the next phase of the project.

Urban reuse would provide the general benefit of reducing withdrawals from the lower aquifer for urban use, thus helping with overall groundwater management. However, irrigation is seasonal, occurring predominately in the late spring, summer, and early fall. Given the small urban demand for recycled water, other disposal methods would also be required.

Agricultural Reuse: Agricultural reuse may allow the treatment facility to dispose of higher concentrations of nitrate in its effluent than for other alternatives if it is applied at agronomic rates. However, the use of treated wastewater for crop irrigation requires diligent and ongoing management to ensure the protection of public health from *E. coli* and other waterborne pathogens.

Agricultural reuse was considered by the LOCSD in 2001. The areas considered were in general east of the town, and within or adjacent to the Urban Reserve Line The disposal capacity for the areas they identified was 446 acre-feet /year, which would not be adequate for the total effluent flow. Los Osos Wastewater Management Plan Update (Ripley Pacific Company, July 2006) also considered agricultural reuse and determined that all effluent could be reused east of town at sites both inside and outside of the groundwater basin. The Los Osos Wastewater Management Plan Update estimated that 500 acres of land would be needed for the reuse program and that 120 days (500 acre-feet) of storage would need to be provided for the winter months. Based on studies from other neighboring communities, the requirements could increase to as much as 600 to 800 acres needed and 150 days (650 acre-feet) of storage required if more conservative assumptions are used.

Figure 2.1 shows irrigated properties east of Los Osos Creek that comprise about 500 acres, corresponding to the necessary acreage for disposal identified by the Los Osos Wastewater Management Plan Update. Assuming three acre-feet of irrigation water per acre per year, these properties have the potential to accommodate about 1,500 acre-feet of treated wastewater per year, the anticipated flow of the future wastewater treatment facility. If this approach were used in conjunction with other disposal strategies, the acreage requirements would be lower.

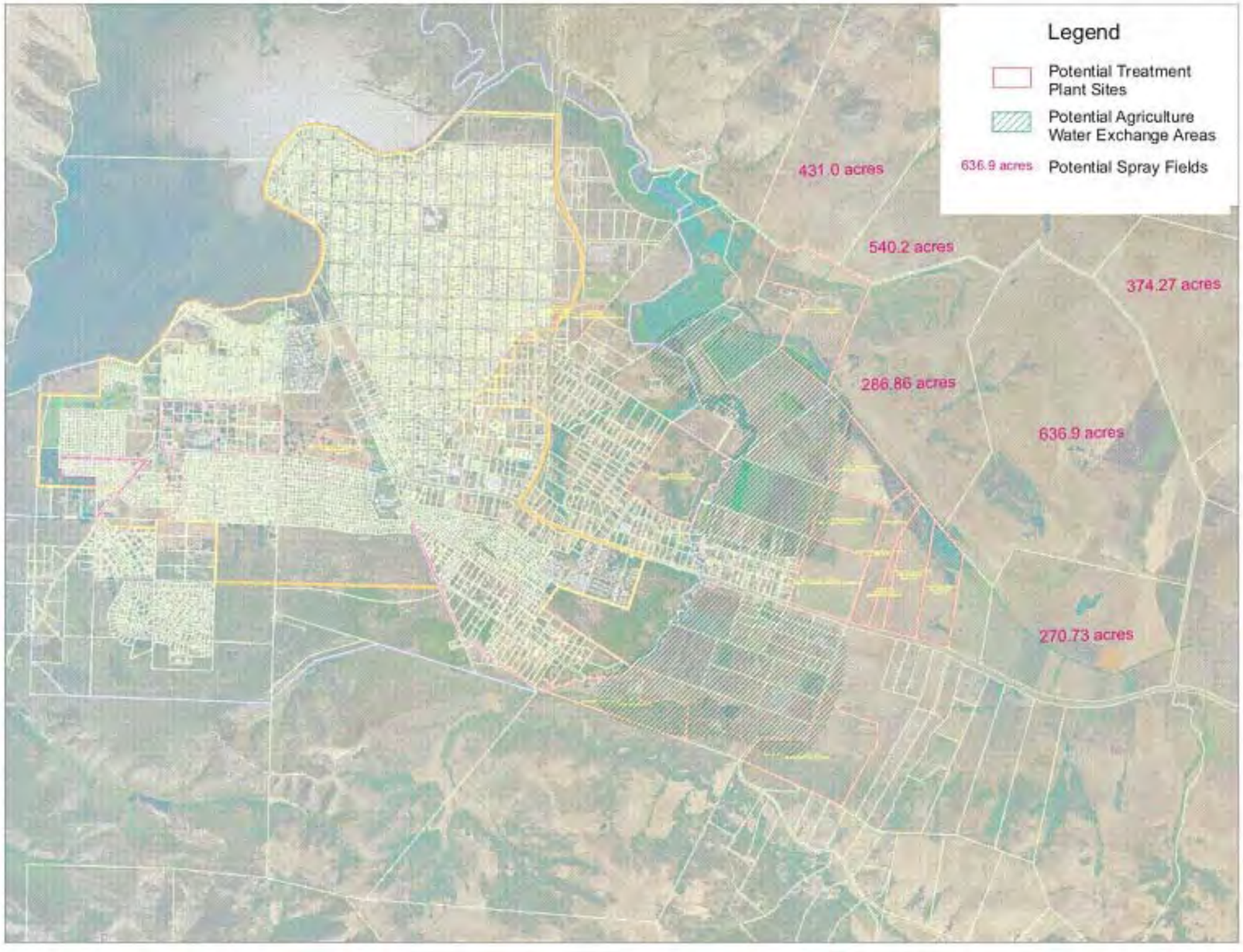

POTENTIAL AREAS FOR SPRAY FIELDS AND AGRICULTURAL WATER EXCHANGE

FIGURE 2.1

SAN LUIS OBISPO COUNTY
LOS OSOS WASTEWATER PROJECT DEVELOPMENT

carollo engineers

The viability of this strategy depends, in part, on the ability to negotiate contractual arrangements for the use/retirement of agricultural wells to offset a sufficient quantity of water demand that would accommodate the desired level of disposal. According to the Los Osos Wastewater Management Plan Update, grower response to the idea of switching to recycled water for irrigation was mixed. Recent publicity o *E. coli* outbreaks in the Salinas Valley, while not related to the use of recycled water has made farmers less receptive to the use of recycled water for consumable crops.

The greatest disadvantage of agricultural reuse is that this alternative transports water out of the Los Osos groundwater basin, exacerbating the problem of seawater intrusion. Under an agricultural water exchange program, wells on agricultural properties would be retired or the water would be diverted for domestic consumption by the residents of Los Osos. This latter option, called agricultural exchange, would help mitigate sea water intrusion. Well water currently used for irrigation would be 'replaced' by treated wastewater during the non-rainy months.

2.3.2 Percolation Ponds and Leachfields

Percolation ponds and leachfields are both methods for disposing of wastewater to the ground through percolation. For either percolation ponds or leachfields, secondary treatment would be required. Based on the previous WDRs developed for Los Osos, both suspended solids and BOD would be limited to a monthly average of 60 mg/L and a daily maximum of 100 mg/L. Total nitrogen would be limited to a monthly average of 7 mg/L and a daily maximum of 10 mg/L. While these are the effluent limits set previously by the RWQCB, they are high compared to those established for leachfield and percolation disposal for other communities. For example, the Central Valley RWQCB WDR Order No. R3-2004-009 (2004) for South County Regional Wastewater Authority, Gilroy-Morgan Hill Regional Wastewater Facility, Cities of Gilroy and Morgan Hill, and Indirect Discharges of Santa Clara County, set effluent limits for land disposal of 30/45 mg/L as the monthly mean/daily mean concentrations for both BOD and TSS, and 5/10 mg/L as the daily mean/daily maximum concentrations for nitrate as N. It is possible that the effluent limits set out in the previous WDRs for Los Osos will be different in future WDRs.

A coliform objective of 2.2 mpn/100 ml was listed in the previous WDRs as a groundwater limit, rather than an effluent limit. If soil aquifer treatment is recognized as a means of reducing coliform concentrations, then it may be possible to use disinfected Secondary-23 as an effluent standard and expect that coliform will be further reduced by natural attenuation in the groundwater.

Groundwater issues are important to consider for any percolation type disposal operation. Regulations are continuing to change and become more restrictive to protect groundwater quality. Considerations such as distance to the nearest well, depth to groundwater and mounding potential must all be considered in addition to water quality. Sizing and siting

requirements for either percolation ponds or leachfields depend on these groundwater issues, the types of soils and the attainable percolation rates.

Percolation Ponds: Percolation ponds are open ponds where water is stored and percolated into the ground. The pond bottoms are managed to maintain percolation rates by drying, ripping and conditioning the soils. Site requirements for this strategy are similar to those for leachfields in that they function best with permeable soil and sufficient depth to groundwater. A percolation pond could be as large as several acres and could be accommodated on several of the potential treatment plant sites identified in Chapter 5.

Due to aesthetic issues, percolation ponds would have to be located downwind, and therefore east, of residential areas. However, except for the sand dunes along the creek, areas that are east of town exhibit poor percolation rates, which means that more land would have to be used for the ponds. Percolation ponds located near the creek would affect surface water quality and would be subject to more stringent regulations. Additionally, the community of Los Osos has in the past been opposed to percolation ponds due to concerns about flooding in the event of a levy breach due to an earthquake. For these reasons, only sites east of town in existing agricultural lands will be considered for percolation ponds.

Construction of a percolation pond involves the excavation of the pond itself and trenches for supply pipes. The area converted to a percolation pond would be permanently lost to agricultural production. Construction of a percolation pond, like any new construction on previously undisturbed land, also has the potential to disrupt previously undiscovered archaeological resources. Should the site for the pond contain sensitive biological resources, construction activities could result in the permanent loss of such resources. On the other hand, standing water can support certain species of sensitive plants and animals, and be beneficial to certain biological resources.

Leachfields: Leachfields are operated by subsurface spreading and percolation, so there is no open water. There are limited areas within the groundwater basin that would be appropriate for subsurface leachfields. The Broderson Site, identified as the disposal option for the Tri W project, has a capacity of 400,000 gpd, which is much less than the effluent flow projected for the future wastewater treatment facility. Harvest wells could be used to increase the site's capacity to 800,000 gpd, but this route requires a separate plan for collecting, treating and disposing of the harvest water. Additional potential leachfield sites could be constructed on ranch and agricultural lands east of the community in the vicinity of the potential treatment plant locations.

If the treatment facility is located east of town, then there will be an additional cost to transport the effluent to the Broderson Site, which is on the west side of town. However, the fact that the Broderson Site is closer to the coast means that its use as a leachfield would help to mitigate seawater intrusion.

The capacity of a disposal leachfield greatly depends on the permeability of the soil and the depth to the underlying groundwater. For example, the Broderson Site was identified as a favorable location because of the permeability of the underlying soils (mostly dune sand) and its connectivity with the shallow aquifer. By contrast, soils associated with agricultural fields generally exhibit slower percolation rates.

Construction of a leachfield involves the excavation of trenches and the installation of percolation and supply pipe. Once installed, the leachfield must be protected from compression that might occur from farm machinery and other motor vehicles. Accordingly, if a potential leachfield site was currently used for crop production, the overlying soils would be lost to crop production to the extent that it involves the use of heavy farm machinery. The vegetation overlying a disposal leachfield must be chosen to ensure that the root systems do not interfere with the percolation capacity of the field. Moreover, leachfields need to be periodically renovated over the life of the fields, which necessitates removing the overlying groundcover.

Should the site for the leachfield contain sensitive biological resources, construction activities could result in the permanent loss of such resources. Should the area be re-vegetated, it would still be subject to periodic removal for maintenance of the field. Leachfield construction, like any new construction on previously undisturbed land, has the potential to disrupt previously undiscovered archaeological resources.

2.3.3 Spray Field

Spray field disposal is the practice of spraying effluent on lands not to grow a particular crop, but to dispose of the water. Water is disposed through evapotranspiration and percolation. Care must be taken to ensure that runoff is reduced and contained. Spray field disposal will probably require Disinfected Secondary-23 treatment. The discharge will likely have to meet groundwater limits of 10 mg/L nitrate and, since all forms of nitrogen can be converted to nitrate, total nitrogen groundwater limits may be required to be less than 10 mg/L.

Several WDRs illustrate the potential water quality requirements that the RWQCB may impose. In the Central Valley RWQCB WDR Order No. R5-2002-0088 (2002) for Donner Summit Public Utilities District Wastewater Treatment Plant, disinfected Secondary-23 effluent was allowed for spray field disposal. In the Central Valley RWQCB WDR Order No. R5-2003-0119 (2003) Requirements For East Bay Municipal Utility District, Pardee Center Wastewater Treatment Facility, disinfected Secondary-23 effluent was allowed for spray field disposal and, besides total coliform, there were no effluent limits imposed. With respect to nitrogen requirements, the Central Coast RWQCB WDR Order No. 01-100 (2001) for the Cambria Community Services District did not include an effluent limit for nitrogen, but states that the discharge “will not cause nitrate concentrations in the groundwater downgradient of the disposal area to exceed 10 mg/L (as N).” The Central Coast RWQCB WDR Order No. 01-042 (2001) for Laguna County Sanitation District cited

the local nitrogen water quality objectives from the Basin Plan, and stated that “[h]ydraulic and constituent (Nitrogen etc.) loading rates for reclamation uses shall be based on crop consumption and tolerance and shall not be exceed what is reasonable production for the crop.” The use of spray fields may allow the treatment facility to dispose of higher concentrations of nitrate in its effluent than for other disposal/reuse alternatives if it is applied at agronomic rates.

The capacity of spray fields to accept treated wastewater would be greatest during the dry season. Spraying of fields during the rainy season would accelerate erosion and sedimentation as well as the volume of runoff conveyed by natural drainage courses. Additionally, most WDRs prohibit spraying immediately before, during, or immediately after a rainfall event. Since the capacity of the spray fields is reduced during the rainy season, a portion of the treated wastewater would need to be stored.

One of the results of artificially watering normally dry acreage would be that native and non-native grasses and other vegetation would be present all year. During the summer, the irrigated area would continue to be green, which would likely stand in stark contrast to surrounding unirrigated areas. In addition, to the extent that the seasonality of water limits the diversity of plant and animal species during the summer, the removal of this constraint could change the composition of species present in these areas.

The greatest disadvantage of spray field disposal is that this alternative transports water out of the Los Osos groundwater basin, exacerbating the problem of sea water intrusion. Under this strategy, treated wastewater would be sprayed on grazing land east of town where it would percolate into the ground or simply evaporate into the air. If the use of spray fields is the sole disposal strategy, about 600 acres would be needed. Assuming the treated wastewater does not satisfy the water quality standards for crop irrigation, cultivated areas would be excluded. However, there are several large holdings east of the community used for grazing which may be potentially suitable (Figure 2.1).

The viability of this strategy depends, in part, on the ability to purchase, or negotiate contractual arrangements for the use of sufficient acreage to accommodate the desired level of disposal.

2.3.4 Creek Discharge

Creek discharge is the practice of disposing wastewater to a surface water body, such as a creek. Discharge to surface waters would be regulated by an NPDES permit and would have to meet the strict requirements of the California Toxics Rule for metals and organics. There are several creeks in the Los Osos area, including Los Osos Creek, which runs along the southern, eastern and northern edges of the community. Los Osos Creek empties into Morro Bay, which borders the community on its western edge. All the creeks in the Los Osos area, as well as Morro Bay, are subject to total maximum daily loads (TMDLs), since they are classified as impaired water bodies. The creeks and Morro Bay are also

designated as having body contact recreation as a beneficial use, which requires Disinfected Tertiary treatment. Due to impairment and the TMDLs, nitrate (as nitrogen) would likely be limited to an average of 2.2 mg/L (Montgomery Watson Americas, Inc., 2001). Since Los Osos Creek has been issued a TMDL for sediments, pathogens, nutrients and dissolved oxygen, the treatment facility would be issued a waste load allocation for these constituents.

Effluent discharge to Los Osos Creek would require treating the effluent to a higher level than would be necessary for discharge to groundwater. In the Wastewater Facilities Project Final Project Report (Montgomery Watson Americas, March 2001), surface water discharge was ruled out since it was expected that nitrogen limits would be much stricter than for other options. In addition, the permitting process for creek discharge is lengthy and involves many state and federal agencies.

The seasonal nature of the creeks could limit their capacity to accept additional water during the rainy season. Thus, if surface disposal were the sole strategy employed, studies would have to be performed to ensure the discharge did not contribute to flooding. Increased flows into the creek, especially during the normally dry season, would likely change the diversity of plant and animal species associated with this habitat. To the extent these species become established they are also afforded the protections of federal and State laws, which would likely require that the increased flow be maintained over the long-term.

Another option is to reserve creek discharge as an option for emergency disposal. However, to get a permit for this, the effluent would always have to be treated to the high standards required for creek discharge. Due to the regulatory restrictions associated with creek discharge, surface water disposal will not be considered for further evaluation.

2.3.5 Constructed Terminal Wetlands

Wetlands serve an important role in improving water quality, providing flood protection and important habitat. Constructed wetlands can be used for treatment, for mitigation for destruction of wetlands elsewhere or for creation of habitat. For this report, wetlands are considered as a disposal method. A terminal wetland has no discharge to surface waters and is designed to evaporate and percolate wastewater effluent for disposal.

A disposal or terminal wetlands is permitted in a WDR issued to the Chester Public Utilities District by the Central Valley RWQCB (2004). The Chester Treatment Plant was not issued effluent limits for either BOD or TSS for the portion of their flow that is discharged to terminal wetlands and secondary treated effluent was permitted.

The LOCSD investigated wetlands as a treatment step, rather than as a disposal alternative (Montgomery Watson Americas Inc., 2001). Wetlands were dismissed as an option without a full analysis because of the large footprint that would be needed for construction. For the purposes of this report, only a disposal or terminal wetlands is considered.

The issues associated with constructed wetlands are similar to those associated with percolation ponds, except that the biological sensitivity of existing wetlands is far greater. In addition, once the wetlands are established, they could have considerable regulatory protections of federal and State laws.

This alternative would provide a general benefit to the community by providing wildlife habitat and a recreation area. This is essentially a variant of the percolation pond strategy in which the pond (or ponds) consists of newly constructed wetlands or the expansion/augmentation of existing wetlands. Wetlands have both aesthetic and biological value, in addition to possessing certain water purifying qualities. A constructed wetland could be combined with larger conservation/restoration efforts such as those undertaken by the Morro Bay Estuary Program or other regional efforts to improve/restore water quality and biodiversity. The most suitable sites, therefore, would be those adjacent to existing wetlands where the opportunity for expansion or augmentation currently exists.

2.3.6 Direct Groundwater Injection

Groundwater injection is the practice of injecting wastewater into a groundwater aquifer, usually deep underground. Groundwater injection can be considered to be water reuse and is regulated by the California of Department of Health Services (DHS). Disinfected Tertiary treatment is required as a minimum. However, all groundwater injection projects that have been implemented in California have been required to add membranes, such as reverse osmosis, to the treatment process.

Based on the DHS published draft regulations for planned direct and indirect recharge of groundwater, BOD will be limited to the concentration of dissolved oxygen in the effluent and total nitrogen will likely be limited to an average of 5 mg/L and a maximum of 10 mg/L. The DHS requires extensive monitoring and testing to protect public health, and there are strict guidelines for distance to nearest wells, time of travel to nearest well, depth to groundwater, percolation rate versus application rate, treatment level and water quality. Direct injection has all of the disadvantages of leachfields, and in addition, it requires a higher level of treatment than do leachfields, so it will not be further considered as a disposal alternative.

2.4 GROUNDWATER BALANCE SUMMARY

The long-term goal of ground water management is to provide a sustainable source of water to serve the community at buildout. The water must also be of sufficiently high quality to meet current and future regulatory standards for all planned uses. During the next phase of work, the fine screening of alternatives, groundwater management will be used as a screening tool. The fine screening will compare each disposal/reuse project with respect to seawater intrusion mitigation, upper aquifer water quality impacts, and progress toward meeting buildout water demand. Projects will be prioritized as follows with respect to their ability to achieve the following goals:

1. Maintain the existing groundwater condition by increasing overdraft; any project that is considered cannot make the situation worse.

2. Achieve a balanced basin with the existing population.

3. Develop a plan to achieve a balanced basin at the buildout population.

4. Halt sea water intrusion.

In this rough screening phase, the issues associated with groundwater management in this area were identified, but not used as a basis to screen alternatives.

2.4.1 Sea Water Intrusion Mitigation

Seawater intrusion is presently occurring in the lower aquifer, which is the primary water supply aquifer for the community. The interface between seawater and fresh water has moved an estimated 1,200 feet inland over the last 20 years, and elevated chloride concentrations have impacted irrigation and community supply wells in the vicinity of the Sea Pines golf course. Precursors of intrusion have been detected as far inland as Palisades Avenue, near downtown Los Osos. It is very difficult to reverse seawater intrusion in a deep aquifer. Those portions of the lower aquifer that have already been intruded are probably permanently lost to the fresh water system. Mitigation efforts will focus on slowing, and ultimately stopping the process of intrusion, which is estimated to require a reduction of pumping of the deep aquifer of 500 to 600 acre-feet per year.

2.4.2 Upper Aquifer Water Quality Impacts

The upper aquifer currently provides approximately 20 percent of the total water supply to the community. Greater use of the resource is restricted, primarily due to nitrate concentrations in excess of the drinking water standards. Groundwater monitoring data at a network of shallow wells indicate that the median nitrate as nitrogen (NO_3-N) concentration for 28 wells tested in October 2006 was 11 milligrams per liter (mg/l). The drinking water standard is 10 mg/l NO_3-N. Nitrogen (along with pathogens) is one of the primary targets for removal from the waste stream (septic system) by a wastewater treatment plant.

Upper aquifer water also contains trace levels of emerging contaminants, including N-nitrosodimethylamine (NDMA), carbamazepine, and sulfamethoxazole (Cleath & Associates, 2006a). NDMA was detected in upper aquifer water above the level at which water customer notification is required, but below the response level at which source removal is recommended. Carbamazepine and sulfamethoxazole (pharmaceuticals) were detected in groundwater at levels several orders of magnitude below prescription levels. No regulatory guidelines have been established for these compounds.

A third area of potential concern for upper aquifer water quality is salt loading. Each cycle of domestic water use adds mineral salts to the groundwater basin from soaps, detergents, water softening equipment, and other sources. Salt loading is also an important

consideration for agricultural land use, due to fertilizer applications and the effects of evapotranspiration. The increased salinity of basin waters due to salt loading can lead to serious water quality problems. To date, salt loading in the groundwater basin has been minimized in the urban area because upper aquifer water is a relatively small portion of the total water supply. As the balance of production shifts from lower to upper aquifer sources, however, the effects of salt loading may become more consequential.

2.4.3 Buildout Water Demand and Safe Yield

Buildout should be a sustainable condition with respect to water resources. Groundwater production at community buildout should not exceed the basin safe yield. There is more than one optimized distribution of wastewater disposal, reuse, and well production, however, which satisfactorily approaches safe yield development. For example, treated wastewater may be applied directly as municipal water reuse, it may be applied to agricultural irrigation and exchanged for groundwater, or it may be percolated into the subsurface and captured by wells. Each of these disposal methods results in wastewater directly or indirectly satisfying basin water demand. Some common objectives for wastewater disposal/reuse projects that would facilitate progress toward the development of basin safe yield include:

- Slowing sea water intrusion.
- Direct reuse of wastewater within groundwater basin.
- Capture of percolated wastewater by wells within the groundwater basin.
- Minimizing export of water resources from the basin.

Current developed yield (groundwater production) in the basin is estimated at 3,350 acre-feet per year (AFY). Basin safe yield under current conditions is estimated at 3,250 AFY, therefore, the basin is currently in overdraft. Although the estimated difference between the developed yield and the safe yield is 100 acre-feet overall, there is 500 to 600 AFY of seawater intrusion occurring since the overdraft is entirely in the lower aquifer.

Basin ground water demand at buildout, as projected under the Estero Area Plan Update (November 2004), has been estimated at 4,000 AFY. Approximately 3,000 AFY is estimated for community municipal demand (including Sea Pines Golf Course), 200 AFY would be for private domestic demand, and 800 AFY would be for agricultural irrigation demand. Safe basin yield with a wastewater project (combined with significant changes in pumping practices) reaches an estimated 3,630 AFY, based on prior work (Cleath & Associates, 2005b). Therefore, even with the basin yield fully developed, there is a 370 AFY deficit in meeting buildout demand.

The focus of subsequent fine screening with respect to basin safe yield will be to compare the assets developed by each alternative wastewater disposal/reuse project. As mentioned above, there is more than one optimized distribution of wastewater disposal, reuse, and

well production that satisfactorily approaches safe yield development. The choice of which distribution is best for the community may be an economic decision. The assets of each project disposal/reuse alternative will be broken down by cost and compared with the benefits gained with respect to restoring the basin water balance (sea water intrusion mitigation) and to water quality impacts (salt loading and nitrate loading). Pros and cons of developing basin safe yield under the various wastewater disposal/reuse projects will also be discussed. These comparisons and discussions will provide a basis for selecting those viable projects that have the best cost-benefit ratio and that provide a suitable foundation toward operating the basin at safe yield.

2.4.4 Wastewater Project Limitations

Achieving the basin safe yield under a wastewater project condition will involve a significant change in current pumping practices, which is not within the purview of a wastewater project. The groundwater basin has historically been managed by community purveyors within the urban services line, and by individual property owners elsewhere. The local water purveyors, Golden State Water Company (formerly Southern California Water Company dba California Cities Water Company), Los Osos Community Services District (formerly County Services Area 9), and S&T Mutual Water Company, comprise the Los Osos Groundwater Technical Advisory Committee (Groundwater TAC).

For many years, the Groundwater TAC met on a regular basis to coordinate efforts on identifying and resolving groundwater basin problems, and to discuss water supply and service issues. The TAC also compiled and organized source information on the groundwater basin, and provided funding for studies, including the development of numerical flow models that were used to investigate seawater intrusion and basin safe yield.

In 2003, a disagreement arose within TAC membership over the long-term implications of the former Tri-W project wastewater disposal plan, and a petition for writ of mandate was filed by California Cities Water Company against the Regional Water Quality Control Board. Legal proceedings were subsequently initiated in 2004 by the Los Osos Community Service District, who were seeking groundwater basin adjudication. To date, no settlement has been reached.

2.5 SUMMARY AND RECOMMENDATIONS FOR FURTHER STUDY

For the rough screening, effluent disposal/reuse alternatives with fatal flaws, and alternatives that are clearly inferior to another alternative were eliminated. However, since multiple disposal/reuse alternatives can be used simultaneously, and because a single alternative may not have sufficient capacity to accommodate all of the effluent flow, redundant alternatives were not be eliminated.

The reuse and disposal alternatives considered in this rough screening report and the issues associated with each are summarized in Table 2.3

2.5.1 Alternatives Eliminated

Groundwater injection and creek disposal were eliminated due to advanced treatment requirements, permitting issues and institutional issues to implementing these options. All other disposal and reuse options will be considered during detailed evaluation.

Table 2.3 Issues for Disposal/Reuse Alternatives
Los Osos Wastewater Project Development
San Luis Obispo County

Disposal/Reuse Alternative	Sufficient Local Capacity for all flow?	Winter Storage Required	Affect on Sea Water Intrusion	Treatment Level	Other Issues
Unrestricted Reuse - Urban	No, 132 ac-ft/yr identified	This alternative can only accommodate small fraction of flow year round	Helps mitigate	Disinfected Tertiary	• Can fit future development with purple pipe • Can be used for nitrogen removal
Unrestricted Reuse - Agriculture	Possibly - depends on local farmers' cooperation and using land outside basin Need 500 - 800 acres	Yes, 500 to 650 ac-ft	Helps mitigate if applied within basin, to a lesser degree than urban reuse	Disinfected Tertiary	• Farmers' response to idea has been mixed • Possibility of in-lieu exchange of reuse water for Agricultural well water • Can be used for nitrogen removal
Percolation Pond	Yes	No	Helps mitigate if located within basin	Disinfected Secondary 23 or 2.2	• Must be downwind of residential areas • Area lost to agriculture • Possible loss of biological resources
Leachfield	Not at Broderson Site (limited to 800,000 gpd with harvest wells, 400,000 without harves wells). Would require many sites (more than identified in past reports)	No, if sized for all flow	Helps mitigate if located within basin	Disinfected Secondary 23 or 2.2	• Harvest wells increase capacity, but harvest water disposal is additional issue • Additional cost to transport effluent to west of town (Broderson site) • Area lost to agriculture • Possible loss of biological/archeological resources
Sprayfield	Possibly - depends on using land outside basin Need approximately 600 acres	Yes	Does not address intrusion - most sites outside basin	Disinfected Secondary 23	• Can be used for nitrogen removal • Changes natural wet/dry seasonal cycle, affecting local species
Creek Discharge	Yes	No	Does not address intrusion	Disinfected Tertiary	• Stringent regulations • Species established due to increased flows will be afforded protections
Constructed Terminal Wetlands	Yes	No, if sized for all flow	Helps mitigate if located within basin	Disinfected Secondary 23	• Could be protected by federal and state laws once established • Provides habitat and recreation area

Table 2.3 Issues for Disposal/Reuse Alternatives Los Osos Wastewater Project Development San Luis Obispo County					
Disposal/Reuse Alternative	**Sufficient Local Capacity for all flow?**	**Winter Storage Required**	**Affect on Sea Water Intrusion**	**Treatment Level**	**Other Issues**
Direct Groundwater Injection	Yes	No	Helps mitigate if located within basin	Disinfected Tertiary	• Stringent regulations • Harvest wells increase capacity, but harvest water disposal is additional issue • Possible disruption of biological/archeological resources

2.5.2 Potentially Viable Alternatives for Detailed Evaluation

The reuse and disposal alternatives that passed through rough screening and meet the basic requirements of the WDRs will be included in the basis of special benefits. These disposal alternatives represent the lowest level of treatment required without worsening the existing groundwater balance condition, and likely the lowest costs. The alternatives that will be developed in more detail include:

- Percolation ponds
- Leachfields
- Spray disposal

Alternatives that are more expensive than those identified for the basis of special benefits, but that can achieve general benefits for the community will also be considered during detailed evaluation. These general benefit alternatives include:

- Urban reuse
- Agricultural reuse (with potential water exchange)
- Constructed wetlands

The general benefits that may be gained from these disposal/reuse alternatives include mitigating seawater intrusion, reclaiming water to offset lower aquifer withdrawals, and the creation of a community amenity such as a recreation area.

As discussed above, the site requirements for effluent disposal depend on the particular disposal strategy (or combination of strategies) employed. Leachfields, spray fields, terminal wetlands, and percolation ponds are comparatively land intensive and would therefore have a higher likelihood to adversely impact sensitive resources such as productive agricultural land, biological and archaeological resources. Conversely, the exchange of agricultural water and surface disposal are by definition less land intensive but more constrained by location, regulatory and environmental factors.

2.5.3 RECOMMENDATIONS FOR FURTHER STUDY

During the detailed evaluation process, several key issues need to be examined to fully evaluated the potentially viable disposal/reuse strategies. The issues may have a significant impact on costs, future flexibility, groundwater management, and/or other project components. Key issues include:

- Site minimum capacity to accommodate the volume of disposal water anticipated. For purposes of this analysis, 'capacity' refers to land area, soil type, sub-surface geology, and the absence of biological resources or other physical features that would limit the discharge, storage and/or percolation of disposal water.
- Construction and operational impacts. Construction-related activities will involve the extension of disposal pipes from the treatment plant, the excavation of pipeline trenches and (in the case of wetlands or percolation ponds) grading/excavation operations that would be comparable on a given site.
- Groundwater management considerations and water balance.
- Regulatory requirements of the San Luis Obispo County General Plan/Local Coastal Program and Land Use Ordinance, as well as other State and federal laws relating to the protection of endangered species and archaeological resources.
- Specific biological and archaeological surveys, along with CPT and soil percolation tests.
- Determine landowners' willingness to sell
- Determine farmers' willingness to switch to reclaimed water

TREATMENT TECHNOLOGY ALTERNATIVES

3.1 PURPOSE

This chapter describes and compares potential treatment alternatives for the Los Osos community wastewater project. The alternatives were assessed relative to the ability of the process to meet permit requirements. Previous studies, including the Wastewater Facilities Project Final Project Report (Montgomery Watson Americas, 2001) and Los Osos Wastewater Management Plan Update (Ripley Pacific Company, 2006), also conducted alternatives evaluations and are summarized in this chapter. This memorandum includes an evaluation of the following wastewater treatment processes:

- Suspended-Growth Activated Sludge
  - Extended Aeration Modified Ludzak-Ettinger (MLE)
  - Membrane Bio-reactor (MBR)
  - BIOLAC® Wastewater Treatment Process
  - Sequencing Batch Reactor (SBR)
  - Oxidation Ditch
- Attached-Growth Fixed Media
  - Trickling Filters
  - Rotating Biological Contactors (RBCs)
  - Packed-Bed Filters
- Advanced Wastewater Treatment Ponds
  - Advanced Integrated Wastewater Pond System (AIWPS)®
  - Facultative Ponds with Constructed Wetlands
  - Partially Mixed Facultative Ponds (e.g., Nelson Air Diffusion System (ADS)®, Advanced Integrated Pond System (AIPS)®)

A central treatment facility is assumed to be the most cost effective, expedient approach. Siting and permitting a central treatment facility, centralized solids treatment and handling operations, and economy-of-scale are significant advantages for the Los Osos community wastewater project. While decentralized treatment offers certain advantages to the community, the compact sewered area limits the value engineering opportunities on the collection system - the primary advantage of decentralized treatment.

3.2 WASTEWATER TREATMENT PROCESS ALTERNATIVES

3.2.1 Suspended-Growth Activated Sludge

Suspended growth activated sludge is a two-step process. Removal of organic materials from the raw sewage in the first step results in growth of microorganisms, which must be regularly wasted from the system. Since these micro-organisms are held in suspension by aeration or mechanical mixing in the first stage of the process, the activated sludge process is called a suspended growth process. In the second step, the treatment organisms are separated from the main process flow. Rough screening evaluations are provided for several types of the suspended growth activated sludge processes with potential use in treatment of wastewater.

3.2.1.1 Extended Aeration Modified Ludzak-Ettinger (MLE) Processes

3.2.1.1.1 *Description*

Previous studies have evaluated the extended aeration process. Extended aeration is an activated sludge system for removal of carbonaceous pollutants and conversion of ammonia in the raw wastewater to nitrate. The extended aeration process typically operates without primary sedimentation, using raw wastewater as its source. This system is called “extended aeration” to distinguish it from the conventional activated sludge treatment process, which is usually preceded by primary sedimentation. To meet nitrogen removal objectives of 7 to 10 mg/L required for most reuse/disposal alternatives, the extended aeration process must be modified by addition of anoxic tanks and internal recycle pumping. When modified in this way, this process is called the modified Ludzack-Ettinger (MLE) process, after its inventor. A flow schematic for an extended aeration MLE system is shown in Figure 3.1.

If necessary for the selected disposal/reuse alternative, filtration and disinfection would be required in addition to the extended aeration MLE process to produce Title 22 unrestricted use recycled water.

3.2.1.1.2 *General Evaluation*

Extended aeration MLE has a proven history in wastewater treatment and is capable of meeting BOD, suspended solids, and nitrogen water quality objectives.

The extended aeration MLE process requires approximately 4 to 6 acres. The compact size of the system facilitates siting and minimizes land acquisition costs.

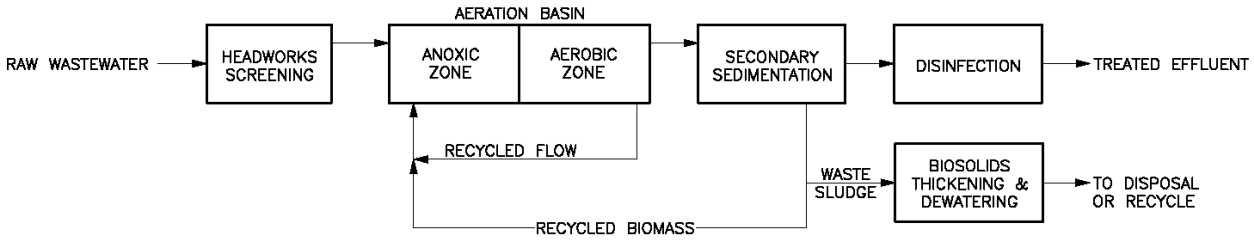

Figure No. 3.1
FLOW SCHEMATIC FOR AN EXTENDED AERATION MLE PROCESS
San Luis Obispo County

3.2.1.2 Membrane Bio-Reactor (MBR)

3.2.1.2.1 *Description*

A membrane bio-reactor (MBR) system, selected as the Tri-W Project treatment alternative due to the compact footprint, is an activated sludge system similar to extended aeration MLE. However, polymeric membranes are used for separation of treatment organisms from the flow stream, instead of gravity sedimentation tanks. A flow schematic for an MBR system is shown in Figure 3.2.

A membrane bio-reactor is used instead of secondary sedimentation tanks to remove the microorganisms from the flow stream. The membranes remove significantly more solids than sedimentation resulting in higher secondary effluent quality. Due to the high quality of the membrane effluent, only disinfection is required in addition to the MBR process to produce Title 22 unrestricted use recycled water.

3.2.1.2.2 *General Evaluation*

MBR facilities have a proven history in wastewater treatment and are capable of meeting BOD, suspended solids, nitrogen, turbidity, and coliform water quality objectives.

The MBR treatment process requires approximately 4 acres, somewhat less than extended aeration MLE. The compact size of the system facilitates siting and minimizes land acquisition costs.

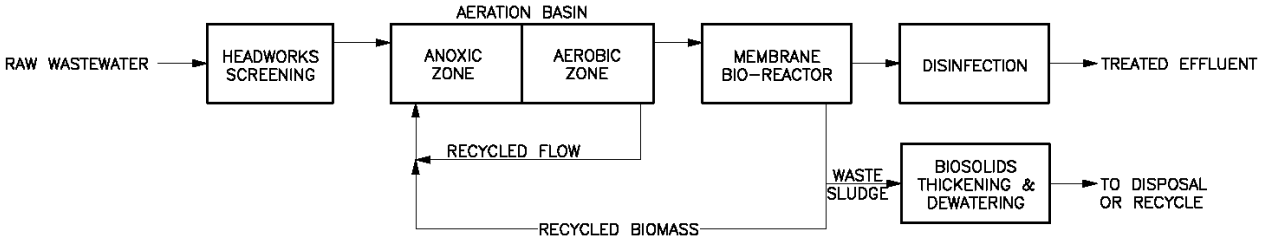

Figure No. 3.2
FLOW SCHEMATIC FOR A MEMBRANE BIO-REACTOR (MBR) PROCESS
San Luis Obispo County

3.2.1.3 BIOLAC® Wastewater Treatment System

3.2.1.3.1 *Description*

The BIOLAC® process is a proprietary activated sludge process developed by Parkson Corporation. The BIOLAC® system is similar to the extended aeration MLE process with multiple “cells” in a large, lined earthen basin to facilitate biological treatment of the wastewater. A flow schematic for a BIOLAC® system is shown in Figure 3.3.

The BIOLAC® system is typically designed for a microorganism solids residence time (SRT) of approximately 50 days compared to an SRT of approximately 6 to 15 days for the MLE process. The longer SRT reduces effluent BOD levels and provides almost complete nitrification/denitrification.

If necessary for the selected disposal/reuse alternative, filtration and disinfection would be required in addition to the BIOLAC® process to produce Title 22 unrestricted use recycled water.

3.2.1.3.2 *General Evaluation*

Parkson Corporation claims over 500 BIOLAC® installations throughout North America treating municipal and industrial wastewater and is likely capable of meeting BOD, suspended solids and nitrogen water quality objectives.

The BIOLAC® treatment process requires approximately 10 acres. The area required and open earthen basins may limit the potential treatment plant sites. As with all treatment options located out-of-town, the land required and transmission facilities could increase the overall project costs.

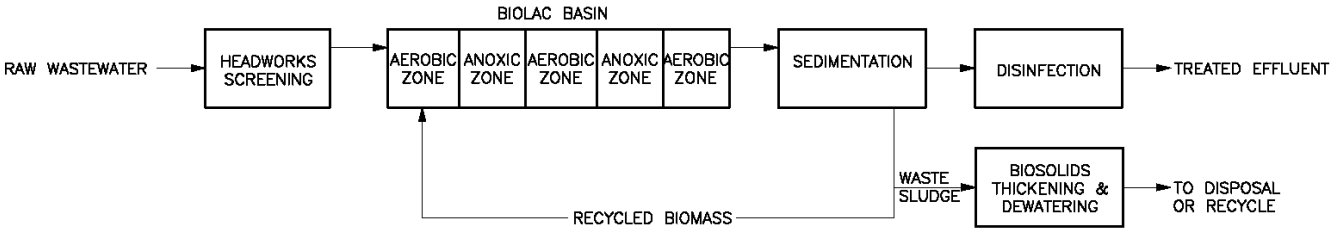

Figure No. 3.3
FLOW SCHEMATIC FOR BIOLAC EXTENDED AERATION PROCESS
San Luis Obispo County

3.2.1.4 Sequencing Batch Reactor (SBR)

3.2.1.4.1 *Description*

A sequencing batch reactor (SBR) is an activated sludge system that relies on a series of tanks. Each tank sequentially fills, aerates, settles and decants the wastewater to achieve the desired water quality objectives. A flow schematic for an SBR system is shown in Figure 3.4.

If necessary for the selected disposal/reuse alternative, filtration and disinfection would be required in addition to the SBR process to produce Title 22 unrestricted use recycled water.

3.2.1.4.2 *General Evaluation*

SBRs have a proven history in wastewater treatment and are capable of meeting BOD, suspended solids and nitrogen water quality objectives. The SBR treatment process requires approximately 6 acres. The compact size of the system facilitates siting and minimizes land acquisition costs.

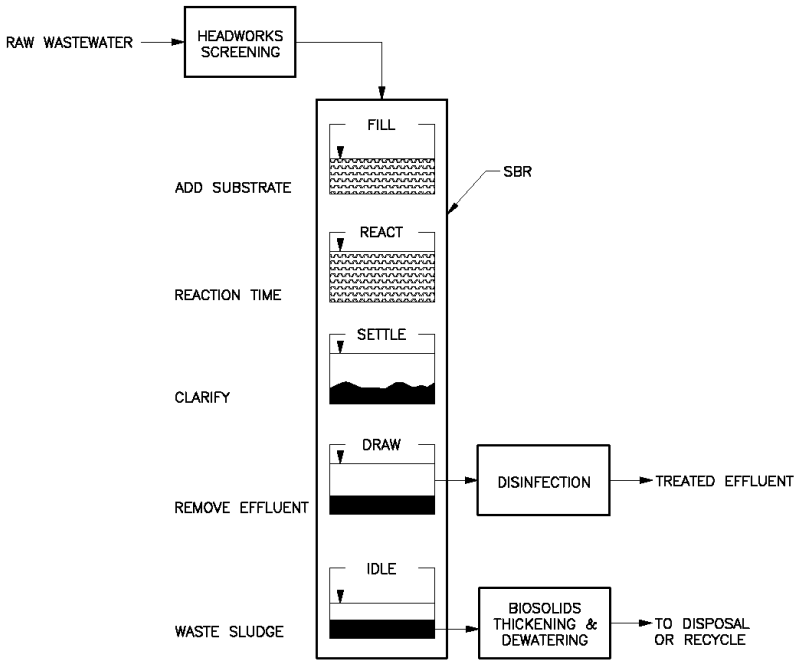

Figure No. 3.4
FLOW SCHEMATIC FOR AN SBR PROCESS
San Luis Obispo County

3.2.1.5 Oxidation Ditch

3.2.1.5.1 *Description*

An oxidation ditch system is an activated sludge system that consists of a ring or oval-shaped channel equipped with mechanical aeration devices. Oxidation ditches typically operate with long detention and solids retention times. A flow schematic for an oxidation ditch system is shown in Figure 3.5.

If necessary for the selected disposal/reuse alternative, filtration and disinfection would be required in addition to the oxidation ditch system to produce Title 22 unrestricted use recycled water.

3.2.1.5.2 *General Evaluation*

The oxidation ditch system has a proven history in wastewater treatment and is capable of meeting BOD, suspended solids, and nitrogen water quality objectives.

The oxidation ditch treatment process requires approximately 8 acres. The land requirement is greater than MLE, MBR, or SBR processes because surface aeration in the oxidation ditch process typically limits tank depth to approximately 12 feet.

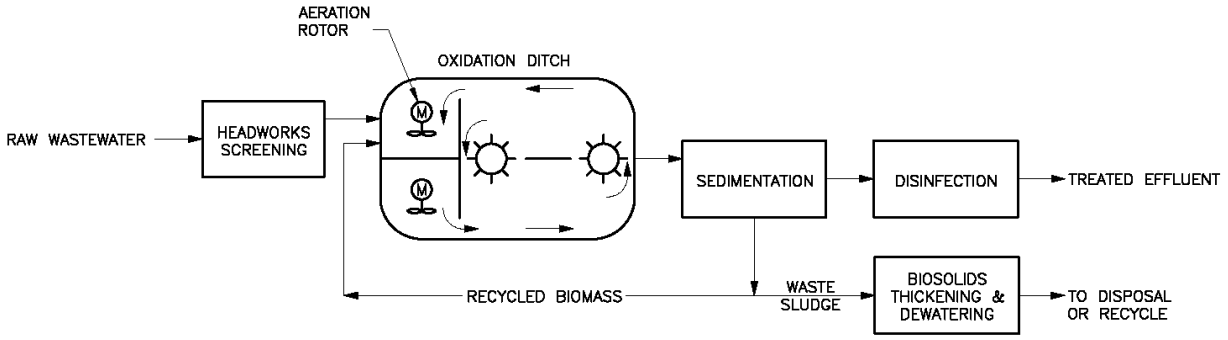

Figure No. 3.5
FLOW SCHEMATIC FOR
AN OXIDATION DITCH PROCESS
San Luis Obispo County

3.2.2 Attached-Growth Fixed Media

Attached-growth fixed media processes use media such as plastic or rock to support microbial growth. Wastewater is spread over the media, where the soluble organic matter is metabolized by the microorganisms and the colloidal organic matter is adsorbed on the film. Rough screening evaluations are provided for several types of attached-growth fixed media processes for potential use in treatment of wastewater.

3.2.2.1 Trickling Filters

3.2.2.1.1 *Description*

Trickling filters are an aerobic attached-growth biological treatment process that may include nitrification (the conversion of ammonia to nitrate) but are not typically employed to obtain low levels of nitrogen. If low levels of effluent nitrogen are required, typically multi-stage filters including methanol addition would be required. A flow schematic for a trickling filter system is shown in Figure 3.6.

3.2.2.1.2 *General Evaluation*

The trickling filter process has a proven history in wastewater treatment and is capable of meeting BOD and suspended solids, but has generally not been used to meet low levels of nitrogen. To meet secondary treatment levels for suspended solids, a supplemental contact tank is usually required. The California Men's Colony facility recently replaced trickling filters with an oxidation ditch system due to compliance issues with disinfection by-products.

The trickling filter process requires approximately five acres. The compact size of the system facilitates siting and minimizes land acquisition costs. The tricking filter process usually includes towers 20 to 30 feet high, which can be a visual obstruction.

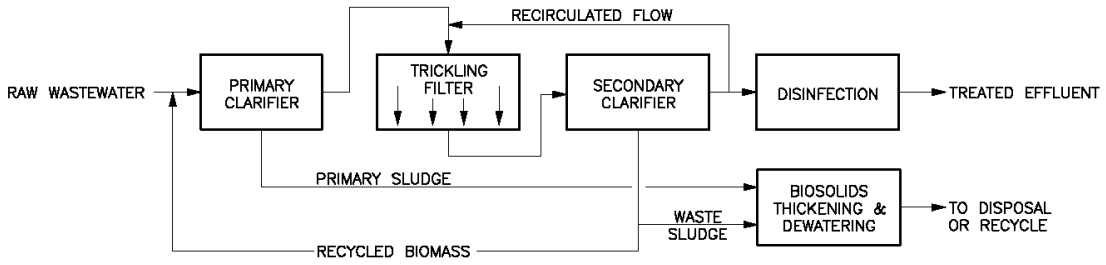

Figure No. 3.6
FLOW SCHEMATIC FOR
A TRICKLING FILTER PROCESS
San Luis Obispo County

3.2.2.2 Rotating Biological Contactors (RBCs)

3.2.2.2.1 *Description*

Rotating biological contactors are an aerobic attached-growth biological treatment process that may include nitrification (the conversion of ammonia to nitrate) but are not typically employed to obtain low levels of nitrogen. RBCs consist of a series of closely spaced circular disks submerged in wastewater and rotated slowly through it. As with trickling filters, clarification is required after the RBCs. A flow schematic for an RBC system is shown in Figure 3.7.

3.2.2.2.2 *General Evaluation*

RBCs have a proven history in wastewater treatment, although historically not as widely used as trickling filters, and are capable of meeting BOD and suspended solids limits. As with trickling filters, RBC systems are generally not capable of meeting low levels of nitrogen.

The RBC process requires approximately 4 to 6 acres. The compact size of the system facilitates siting and minimizes land acquisition costs.

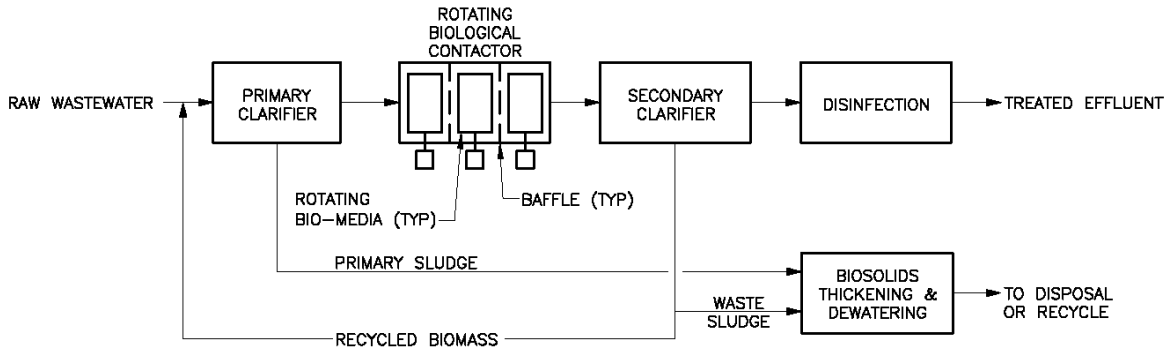

Figure No. 3.7
FLOW SCHEMATIC FOR A ROTATING BIOLOGICAL CONTACTOR PROCESS
San Luis Obispo County

3.2.2.3 Packed-Bed Filters

3.2.2.3.1 *Description*

Packed bed filters utilize hanging synthetic fibers as a fixed substrate for aerobic growth in pre-manufactured fiberglass pods with nominal dimensions of 8 feet by 16 feet. These pod-packed-bed filters are commonly used for commercial and small residential applications that utilize STEP/STEG collection.

3.2.2.3.2 *General Evaluation*

Packed-bed filters are a very new treatment process and there is little experience with long-term operation of this technology in municipal treatment plants. Most experience with the process is with small scale or on-site systems. According to the Los Osos Wastewater Management Plan Update (Ripley Pacific Company, July 2006), approximately 410 pod filters are required to accommodate a flow of 1.3 mgd at an application rate of 25 gallons per day per square foot (gpd/sf). A packed-bed filter system requires approximately 4 to 6 acres. The report concluded that the cost to distribute and collect process flow from this quantity of filters is impractical and result in a relatively high construction costs.

3.2.3 Advanced Wastewater Treatment Ponds

Advanced wastewater treatment ponds is a broad term to classify large earthen or concrete basins used to stabilized domestic wastewater by natural biological processes that occur in shallow ponds. Numerous variations of treatment ponds exist to optimize suspended solids, BOD, fecal microorganisms and ammonia removal. Rough screening evaluations are provided for several types of relatively common pond systems.

3.2.3.1 Advanced Integrated Wastewater Pond System (AIWPS®)

3.2.3.1.1 *Description*

The Advanced Integrated Wastewater Pond System was assessed in the Wastewater Facilities Project, Draft Project Report (Oswald Engineering Associates, January 2000). A flow schematic for an AIWPS® process is shown in Figure 3.8. AIWPS is generally differentiated from AIPS technology by including shallow high-rate algal ponds. AIPS is similar to partially mixed facultative ponds with some adjustments. Partially mixed facultative ponds are discussed later in this chapter.

The advanced facultative and initial high rate ponds remove about 40 percent of the plant influent nitrogen by incorporation into algae. The algal mass is removed in the algal settling pond and dissolved air flotation unit. The flow is then conveyed to another set of high rate ponds where approximately 55 percent of the plant influent nitrogen is removed by another algal biomass. A second set of settling ponds and dissolved air flotation are required to remove this algal biomass. Effluent nitrogen is predicted to be approximately 8 mg/L.

Filtration would be required to achieve the water quality objective of 7 mg/L total nitrogen (Oswald Engineering Associates, January 2000).

If necessary for the selected disposal/reuse alternative, disinfection would be required in addition to the AIWPS® process and filtration to produce Title 22 unrestricted use recycled water.

3.2.3.1.2 *General Evaluation*

Advanced Integrated Wastewater Pond Systems have a proven history of BOD and suspended solids removal, but have generally not been used to meet low levels of nitrogen. Documented nitrogen removal performance data is limited and acceptance by the RWQCB to meet the waste discharge requirements is questionable.

The AIWPS® treatment process requires approximately 64 acres for the treatment ponds and emergency storage ponds as recommended by Oswald Engineering Associates, Inc. The significant area required, assuming nitrogen removal is required at some point in time, would severely limit the potential treatment plant sites.

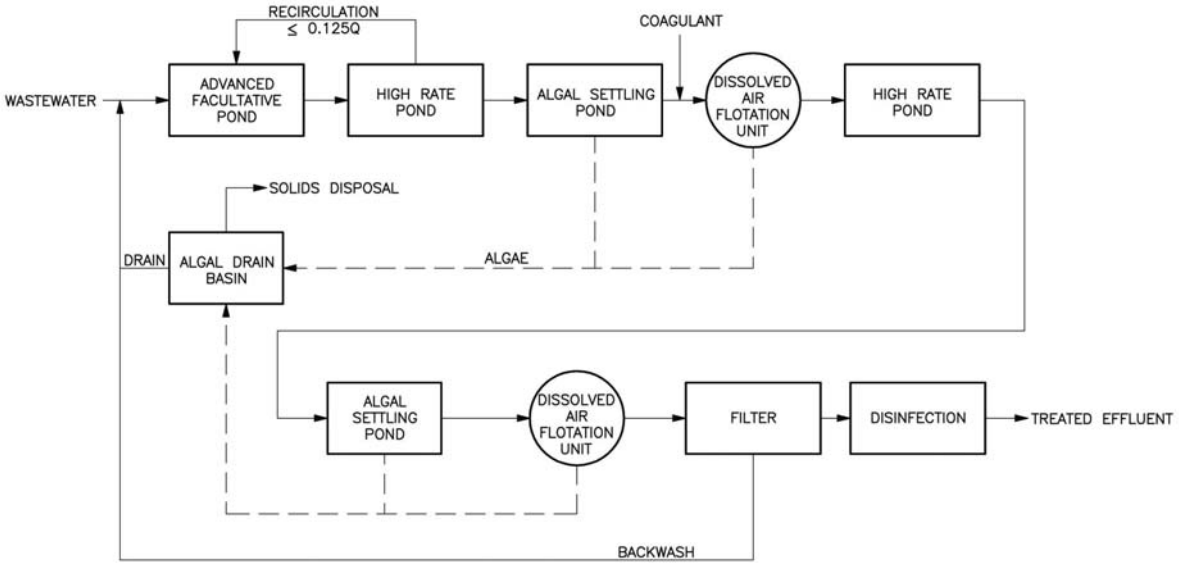

Figure No. 3.8
FLOW SCHEMATIC FOR AN ADVANCED INTEGRATED WASTEWATER POND SYSTEM
San Luis Obispo County

3.2.3.2 Facultative Ponds with Constructed Wetlands

3.2.3.2.1 *Description*

Facultative organisms function with or without dissolved oxygen. Facultative ponds are generally aerobic, however, these ponds do operate in a facultative manner and have an anaerobic zone. Dissolved oxygen is supplied by algae living within the pond and atmospheric transfer through wind action.

Treatment in a facultative pond is provided by settling of solids and reduction of organic oxygen demanding material by bacterial activity. Facultative ponds are usually four to eight feet in depth and can be viewed as having three layers. The top six to eighteen inches is aerobic where aerobic bacteria and algae exist in a symbiotic relationship. The aerobic layer is important in maintaining an oxidizing environment in which gases and other compounds leaving the lower anaerobic layer are oxidized. The middle two to four feet is partly aerobic and partly anaerobic, in which facultative bacteria decompose organic material. The bottom one to two feet is where accumulated solids are decomposed by anaerobic bacteria.

Aerobic reactions in facultative ponds are limited because they do not have mechanical aeration. Facultative and anaerobic reactions need more time than aerobic reactions to provide the same degree of treatment. The detention time of facultative ponds is typically over 120 days.

This process utilizes constructed wetlands for the final step to provide nitrogen removal. Filtration and disinfection would also be required to meet Title 22 requirements for unrestricted use, if necessary for the selected disposal/reuse alternative.

3.2.3.2.2 *General Evaluation*

This system has been used at many facilities to meet BOD and suspended solids requirements for all disposal/reuse alternatives. However, the wetlands provide limited control and have water quality impacts resulting from wildlife contact. Nitrogen levels of 8 to 10 mg/L may be achieved but filtration would be required to comply with turbidity limits for reuse alternatives and achieve nitrogen levels of approximately 7 mg/L. Permitting this system would be problematic for most reuse/disposal alternatives due to the limited control and likely variations in effluent quality.

The facultative ponds and constructed wetlands treatment process requires approximately 60 to 90 acres. The area required limits the potential treatment plant sites.

3.2.3.3 Partially Mixed Facultative Ponds

3.2.3.3.1 *Description*

A flow schematic for a partially mixed facultative pond process is shown in Figure 3.10. Partially mixed facultative ponds include proprietary designs such as Nelson Air Diffusion System (ADS)® and Advanced Integrated Pond System (AIPS)®. Specific design requirements will be considered during detailed evaluation and design, if applicable.

Partially mixed facultative ponds can be viewed as a combined biological process that oxidizes organic oxygen demanding material and a physical operation that allows settling of organic and inorganic solids. Mechanical aeration provides dissolved oxygen needed for aerobic organisms in the pond to convert and oxidize the organic material in the wastewater. It also provides the physical mixing necessary to distribute dissolved oxygen, suspend the organic material and bring the organisms into contact with the organic material. Mixing must not be so great as to prevent the settling of solids for both sedimentation and for facultative and anaerobic degradation.

Partially mixed facultative ponds provided with adequate aeration can be deeper and smaller than facultative ponds. Typical partial mix ponds are 10 to 16 feet deep and have a detention time of 30 to 60 days.

3.2.3.3.2 *General Evaluation*

This system has been used at many facilities to meet BOD and suspended solids requirements for all disposal/reuse alternatives. Nitrogen levels of 8 to 10 mg/L may be achieved but the system offers limited control. Filtration would be required to comply with turbidity limits for reuse alternatives and achieve nitrogen levels of approximately 7 mg/L.

The partially mixed facultative pond treatment process requires approximately 20 acres. A dual power aerated lagoon would require slightly less area. The area may limit the potential treatment plant sites.

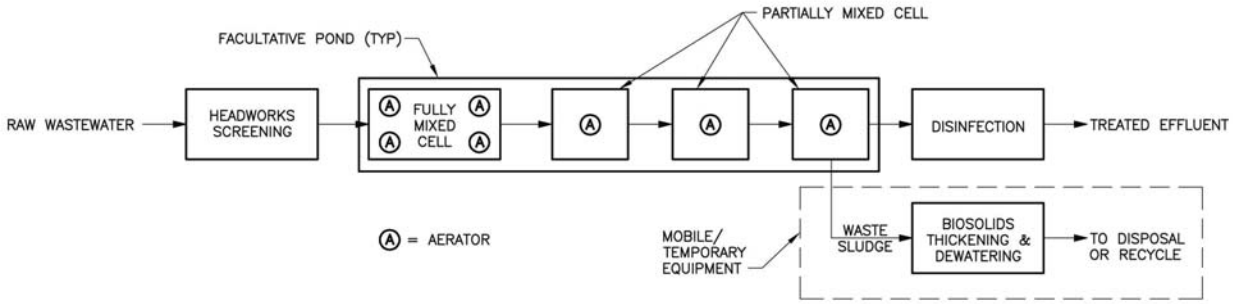

Figure No. 3.9
FLOW SCHEMATIC FOR A PARTIALLY MIXED FACULTATIVE POND SYSTEM
San Luis Obispo County

3.2.4 Summary of Wastewater Treatment Process Alternatives

Table 3.1 is a summary of wastewater treatment processes evaluated. The table includes quantitative information on previously estimated construction costs, acreage required, and energy usage. It also summarizes qualitative information discussed in previous reports. This qualitative information includes the ability of the system to achieve low nitrogen levels required by certain disposal alternatives, “good neighbor” features (such as low noise, odor treatment feasibility, and the ability to cover the facility), and if significant proprietary technology is required.

3.3 SUPPORT FACILITIES

Any treatment option selected for Los Osos requires ancillary facilities and common features including:

- Headworks Screening/Primary Treatment. (Note: specific requirements depend on treatment option and collection system.)
- Septage Receiving
- Solids Thickening and Treatment (Refer to Chapter 4 - Biosolids Disposal Alternatives). (Note: Permanent facilities are not required for Advanced Wastewater Treatment Ponds due to infrequent sludge removal and treatment. Sludge removal is typically done with mobile, temporary equipment.)
- Disinfection
- Odor Control Facilities
- Effluent Distribution Pump Station
- Operations Building
- Aesthetic Features (Architecture/Landscaping)
- Standby Power
- SCADA (Supervisory Control and Data Acquisition)
- Site Work/Yard Piping

These facilities will be impacted by the collection system, treatment process, site and reuse/disposal alternative evaluated. Each ancillary facility and common feature will be included with the detailed evaluation of potentially viable project alternatives to assess any impacts on project costs, site footprint, regulatory compliance, community acceptance and other evaluation criteria.

Table 3.1 Summary of Wastewater Treatment Process Alternatives
Los Osos Wastewater Project Development
San Luis Obispo County

Treatment Alternative	Relative Construction Cost	Relative O & M Cost	Estimated Acreage Required [1,2] (Acres)	Approximate Nitrogen Removal Capabilities (mg/L)[(4)]	Relative Energy Usage	"Good Neighbor" Features
Suspended Growth Activated Sludge						
Extended Aeration MLE	Moderate	Moderate	6	Probably less than10	Moderate	• Odor treatment as necessary • Low noise/enclosable equipment • Covered facility not cost-effective
Membrane Bio-Reactor (MBR)	High	Moderate	4[3]	Probably less than10	High	• Odor treatment as necessary • Low noise/enclosable equipment • Covered facility for multi-use options feasible
BIOLAC®	Low	Low	10	Probably less than10	Low	• Basin size prohibits odor control • Low noise/enclosable equipment • Covered facility not feasible
Sequencing Batch Reactor (SBR)	Moderate	Moderate	6	Probably less than10	Moderate	• Odor treatment as necessary • Low noise/enclosable equipment • Covered facility not cost-effective
Oxidation Ditch	Moderate	Moderate	8	Probably less than10	Moderate	• Odor control as necessary but costly for oxidation ditch • Low noise/enclosable equipment • Covered facility not feasible
Attached-Growth Fixed Media						
Trickling Filters	Moderate	Moderate	5	Probably greater than 10	Low	• Odor control as necessary • Low noise • Covered facility not feasible
Rotating Biological Contactors (RBCs)	Moderate	Moderate	4-6	Probably greater than 10	Low	• Odor treatment as necessary • Low noise • Covered facility not cost-effective
Packed Bed Filters	High	Moderate	4-6	Probably greater than 10	Low	• Odor control as necessary • Low noise • Covered facility not feasible

Table 3.1 Summary of Wastewater Treatment Process Alternatives
Los Osos Wastewater Project Development
San Luis Obispo County

Treatment Alternative	Relative Construction Cost	Relative O & M Cost	Estimated Acreage Required [1,2] (Acres)	Approximate Nitrogen Removal Capabilities (mg/L)[(4)]	Relative Energy Usage	"Good Neighbor" Features
Advanced Wastewater Treatment Ponds						
Advanced Integrated Wastewater Pond System (AIWPS®)	Low	Moderate	64	Probably greater than 10	Low	• Pond size prohibits odor control • Low noise/enclosable equipment • Covered facility not feasible
Facultative Ponds and Constructed Wetlands	Low	Low	60-90	Questionable /Limited Control (Probably greater than 10)	Low	• Limited control of water quality in wetlands • Pond size prohibits odor control • Low noise/enclosable equipment • Covered facility not feasible
Partially Mixed Facultative Ponds	Low	Low	20[(6)]	Questionable /Limited Control (Probably greater than 10)	Low	• Pond size prohibits odor control • Low noise/enclosable equipment • Covered facility not feasible

Notes:

1) Based on Los Osos Wastewater Management Plan Update (Ripley Pacific Team, 2006).
2) Based on Final Project Report (Montgomery Watson Americas, 2001).
3) TRI-W site was 8 acres. However, a significant portion of the space is necessary for community amenities. Acreage estimated is for general MBR facility to be consistent with extended aeration MLE and other alternatives.
4) Processes evaluated are not acceptable for extremely low nitrogen levels required for creek discharge and groundwater injection. A process such as Bardenpho Aeration would be required to achieve sufficient nutrient removal.
5) Costs are relative to an Extended Aeration MLE facility. Conceptual level costs will be developed as part of the detailed evaluation process.
6) Estimated acreage not presented in previous studies. Estimate is based on information from the Wallace Group.

3.4 SUMMARY AND RECOMMENDATIONS FOR FURTHER STUDY

3.4.1 Screening Approach

The main purpose of this report is to identify a set of potentially viable project alternatives to compare to the Tri-W Project. As outlined in Chapter 1, the approach to the rough screening analysis for treatment process alternatives includes:

- Fatal Flaw Analysis - An alternative will be removed from consideration if it has a characteristic that will clearly impede its implementation, from either a cost, regulatory, institutional or technical standpoint.
- Elimination of Redundancy - An alternative will be removed from consideration if it is equivalent to the alternative that has already been developed for the Tri-W Project.
- Removal of Equivalent Alternatives - An alternative will be removed from consideration if there is another alternative that is clearly superior in one respect, even if they are otherwise comparable.

3.4.2 Potentially Viable Alternatives for Detailed Evaluation

Based on the rough screening analysis, **potentially viable treatment processes for detailed evaluation are:**

- **Suspended-Growth Activated Sludge**
  - **Extended Aeration Modified Ludzak-Ettinger (MLE)**
  - **BIOLAC® Wastewater Treatment Process**
  - **Sequencing Batch Reactor (SBR)**
  - **Oxidation Ditch**
- **Attached-Growth Fixed Media**
  - **Trickling Filters**
- **Advanced Wastewater Treatment Ponds**
  - **Partially Mixed Facultative Ponds**

The screening approach for treatment processes evaluated relative effluent nitrogen limits, compatibility with Title 22 Disinfected Tertiary implementation (either initially or in the future), acreage requirements, and urban compatibility in addition to other general evaluation criteria.

An MBR system is viewed as the only treatment alternative that is urban compatible. It is relatively easy to cover and screen compared to the other alternatives. MBRs are not cost effective where land and urban mitigation are not project drivers. **Therefore, MBR technology is viewed as the appropriate choice for the Tri-W Project but will not be considered for the potentially viable alternatives.**

RBCs and packed bed filters have no distinct advantage over trickling filters and will not be considered further. RBC systems are generally not capable with meeting low levels of nitrogen. Packed-bed filters are a relatively new treatment process and there is little experience with long-term operation of this technology in municipal treatment plants. Most experience with the process is with small scale or on-site systems. The Wastewater Management Plan Update concluded that the cost to distribute and collect process flow from the quantity of filters required

is impractical and results in a relatively high construction costs. **Therefore, only trickling filters will be considered further as an attached growth treatment process.**

Two options, AIWPS and Facultative Ponds with Constructed Wetlands (for treatment), have significant land requirements and are unlikely to meet the nitrogen limits of the reuse/disposal options. A partially mixed facultative pond system is the only pond alternative with limited nitrogen control and a reasonable land requirement and, therefore, is the only pond system to be carried forward to detailed evaluation.

3.4.3 Recommendations for Further Study

During the detailed evaluation process, several key issues need to be examined to fully evaluate the potentially viable treatment processes. The issues may have a significant impact on costs, future flexibility, acreage requirements and/or other project components. Key issues include:

- Confirmation of nitrogen removal limits and control
- Impact of nitrogen removal capabilities on reuse/disposal alternatives
- Storage requirements, including acreage, for various reuse/disposal alternatives
- Wet weather storage requirements
- Additional processes required for production of Title 22 Disinfected Tertiary effluent.
- Impacts on solids treatment and disposal alternatives
- Impact of collection system (influent water quality) on treatment process design including septage handling
- Impact on disinfection and odor control requirements
- General benefit alternative impacts including acreage requirements (e.g. filter requirements for Title 22 Disinfected Tertiary) for Proposition 218 evaluation
- Consistency with other goals of the project such as reuse or balancing the groundwater basin

SOLIDS TREATMENT AND DISPOSAL ALTERNATIVES

4.1 PURPOSE

This chapter describes and compares potential biosolids treatment and disposal alternatives for the Los Osos community wastewater project. The alternatives described focus on common biosolids treatment utilized in the United States. Alternatives evaluated in previous studies, including the Wastewater Facilities Project Final Project Report (Montgomery Watson Americas, 2001) and Los Osos Wastewater Management Plan Update (Ripley Pacific Company, 2006), are also summarized.

4.2 REGULATIONS

4.2.1 Federal

Federal regulations mandated by the Environmental Protection Agency (EPA) require that biosolids must be processed in a manner as to not cause adverse effects on public health or the environment prior to land application or surface disposal (Federal Register 40 CFR Part 503, 1993). These regulations specify various alternatives to meet the pathogen reduction requirements preventing regrowth and vector attraction reduction. The Part 503 Rule separates biosolids into Class A, Class B, and not yet meeting Class B (sub-Class B) classifications. Class A biosolids are safe for public use and meet either one of the following criteria:

- Fecal coliform density of less than 1000 Most Probable Number (MPN) per gram of total dry solids.
- *Salmonella sp*. density of less than three MPN per four grams of total dry solids.

The Class A biosolids must meet one of six pathogen reduction criteria and one of eight vector reduction attraction criteria. Application of Class B biosolids is typically restricted to agricultural lands for recycling or disposal. Class B biosolids must meet either a:

- Fecal coliform density of less than 2.0×10^6 MPN per gram of total dry solids.
- Fecal coliform density of less than 2.0×10^6 Colony Forming Units (CFU) per gram of total dry solids.

The Class B biosolids must meet one of three pathogen reduction criteria to demonstrate significant reduction of pathogens. Biosolids that do not meet Class B requirements must be further processed prior to final disposal and/or recycling.

In addition, the Part 503 Rule contains pollutant-ceiling concentrations for metals that define the maximum allowable concentrations for any biosolids to be land applied (40 CFR 503.13 Table 1). In addition, there is a set of lower pollutant limits for biosolids to be classified as “exceptional quality” (EQ) biosolids (40 CFR 503.13 Table 3). Biosolids with pollutants above the Table 1 ceiling limits cannot be applied to land. Biosolids with pollutants below

the Table 1 ceiling limits, but above the Table 3 limits, can be applied to land but are subject to annual and cumulative pollutant loading limits. Biosolids below the Table 3 limits can be applied to land without regard to the annual or cumulative loading limits.

4.2.2 State and Local

In 2004, the State Water Resources Control Board (SWRCB) adopted general Waste Discharge Requirements (WDR) for the discharge of biosolids as a soil amendment that go beyond the requirements of the Part 503 Rule (1993). The WDR is contained in Water Quality Order No. 2004 - 0012 - DWQ (General Order) and intended to streamline the regulatory process for land application sites statewide. In addition, the biosolids quality must meet the Biosolids Ordinance(s) in any county where the biosolids are land applied.

Biosolids in San Luis Obispo County are currently governed by a 48-month moratorium ordinance (No. 3080) that restricts the land application of Class A biosolids. One caveat of this ordinance is that composted or commercially packaged biosolids products are exempt from this limitation. Due to this ordinance, nearby municipalities such as Morro Bay have responded by developing a beneficial reuse program for the biosolids generated through a program of composting.

4.3 TREATMENT AND DISPOSAL OBJECTIVES

Residual solids wasted from biological processes typically encompass the majority of the facility's disposal requirements. Biosolids processing includes a series of steps to reduce pathogens and vector attraction. The stabilization step reduces the volatile fraction while providing pathogen destruction, and biosolids conditioning in an aerobic and/or anaerobic manner. Common stabilization processes include digestion, composting, and alkaline addition to achieve Class A or Class B biosolids. Conditioning and dewatering steps reduce the stabilized biosolids volume by increasing the solids content up to 30 percent prior to disposal. Heat drying or drying beds can further reduce the solids volume up to 95 percent prior to disposal.

This chapter includes an evaluation of the following biosolids treatment and disposal objectives:

- Class A Treatment Options with Local Recycling.
- Class B Treatment Options with Off-Site Disposal/Recycling.
- Sub-Class B Treatment with Off-Site Disposal/Recycling.
- Local Land Disposal.

4.4 DESIGN CRITERIA

4.4.1 Biosolids Production Projections

The quantity of biosolids produced depends on the type of collection system, influent flow estimates, and treatment technology implemented for the Los Osos facility. The Final

Project Report (Montgomery Watson Americas, 2001) estimated biosolids production assuming a gravity collection system and ranged from 1250 to 2700 pounds per day (dry weight). The Los Osos Wastewater Management Plan Update (Ripley Pacific Company, 2006) estimated biosolids production for the Tri-W Membrane Bio-reactor facility at 3,200 pounds per day (dry weight) assuming a gravity collection system. Both reports assumed an average dry weather flow of 1.3 mgd.

A STEP/STEG collection system results in much lower biosolids production rates since a large percentage of solids remain in the septic tank until the tank is pumped out. The reductions in BOD, suspended solids and inorganic matter at the treatment plant are attributable to settling and anaerobic pretreatment provided in the STEP/STEG tanks. The Los Osos Wastewater Management Plan Update (Ripley Pacific Company, 2006) estimated biosolids production at 550 pounds per day (dry weight) assuming STEP collection. In addition, septic tanks will need to be pumped out once every five years. Assuming five septic loads per day to service the community and level the treatment sizing an additional 250 pounds per day (dry weight) are estimated for treatment and disposal.

Biosolids production will be confirmed during detailed evaluation of potentially viable project alternatives to assess the impacts of collection system and treatment technology evaluated.

4.4.2 Biosolids Characteristics

For the purpose of the biosolids analysis, it is assumed that the Los Osos facility will provide a minimum of secondary treatment. The biosolids evaluation includes wasted sludge characteristics from two common treatment process sublevel types: conventional secondary processes that result in unstabilized waste activated sludge (WAS) (conventional secondary) and extended secondary processes that result in partially stabilized WAS (extended secondary). For these two options, treatment practices producing either an EPA Class A or B biosolids product are discussed.

Conventional secondary treatment has relatively short retention times. Conventional secondary processes recommended in Chapter 3 for further evaluation include trickling filters. This sludge is not stabilized and is highly odorous.

An extended secondary process such as oxidation ditches or SBR will produce a higher quality effluent but results in the production of more solids. With an extended solids retention time (SRT), the solids are generally well stabilized and additional stabilization may not be necessary prior to disposal.

4.5 BIOSOLIDS TREATMENT AND DISPOSAL PROCESSES

This preliminary evaluation examines the range of solids treatment and disposal processes typically practiced in the United States and its applicability to the Los Osos facility. Regardless of type of secondary treatment selected, the Los Osos facility is capable of achieving either Class A or Class B biosolids on-site. For the purpose of this analysis, it is

assumed that a treatment process capable of attaining the next level of EPA biosolids classification will be designed as such. For example, undigested biosolids that are only dewatered are considered sub-Class B. Solar drying beds will be designed for a minimum of 90 days retention to allow undigested biosolids to meet Class B requirements.

Figures 4.1 and 4.2 summarize the alternatives and the processes evaluated in this chapter.

4.5.1 Thickening

Proper treatment of biological solids includes processes for both mass and volume reduction. Biosolids thickening processes include gravity thickening, dissolved air flotation, gravity-belt thickening (GBT), rotary-drum thickening, and centrifugation. Thickening generally increases waste activated sludge to a typical range of 3 to 6 percent solids (Metcalf and Eddy, 2003), reducing the size requirements of downstream processes. Gravity thickeners have large footprints with odor generation being a significant potential cause of concern. Dissolved air flotation processes are effective, but have higher operating costs. Centrifuges and rotary-drum thickeners are generally used in larger facilities. GBTs are generally recommended as the most suitable for smaller facilities.

4.5.2 Stabilization Alternatives

4.5.2.1 Digestion

Class A and Class B digestion technology exists for biosolids stabilization. Through biological decomposition or conversion, up to 50 percent of the volatile suspended solids in the sludge are destroyed. Therefore, digestion can significantly decrease the amount of total solids sent to subsequent treatment processes and disposal. Aerobic digestion can provide the means for significant volatile solids reduction in a method that minimizes odor production. Aerobic digestion is most frequently used in smaller wastewater treatment plants (less than 5 mgd capacity) for stabilization and conditioning of secondary waste biosolids. Anaerobic digestion is more commonly the appropriate process for larger facilities and facilities with primary clarifiers.

Design and operating parameters associated with digesters are constrained by the volatile solids loading and retention time. For aerobic digesters, there are also minimum oxygen requirements. Establishment of recommended SRT and volatile suspended solids (VSS) loading rates will be dependent on the amount and condition of sludge sent to the digesters and the applicable effluent requirements (Class A or Class B).

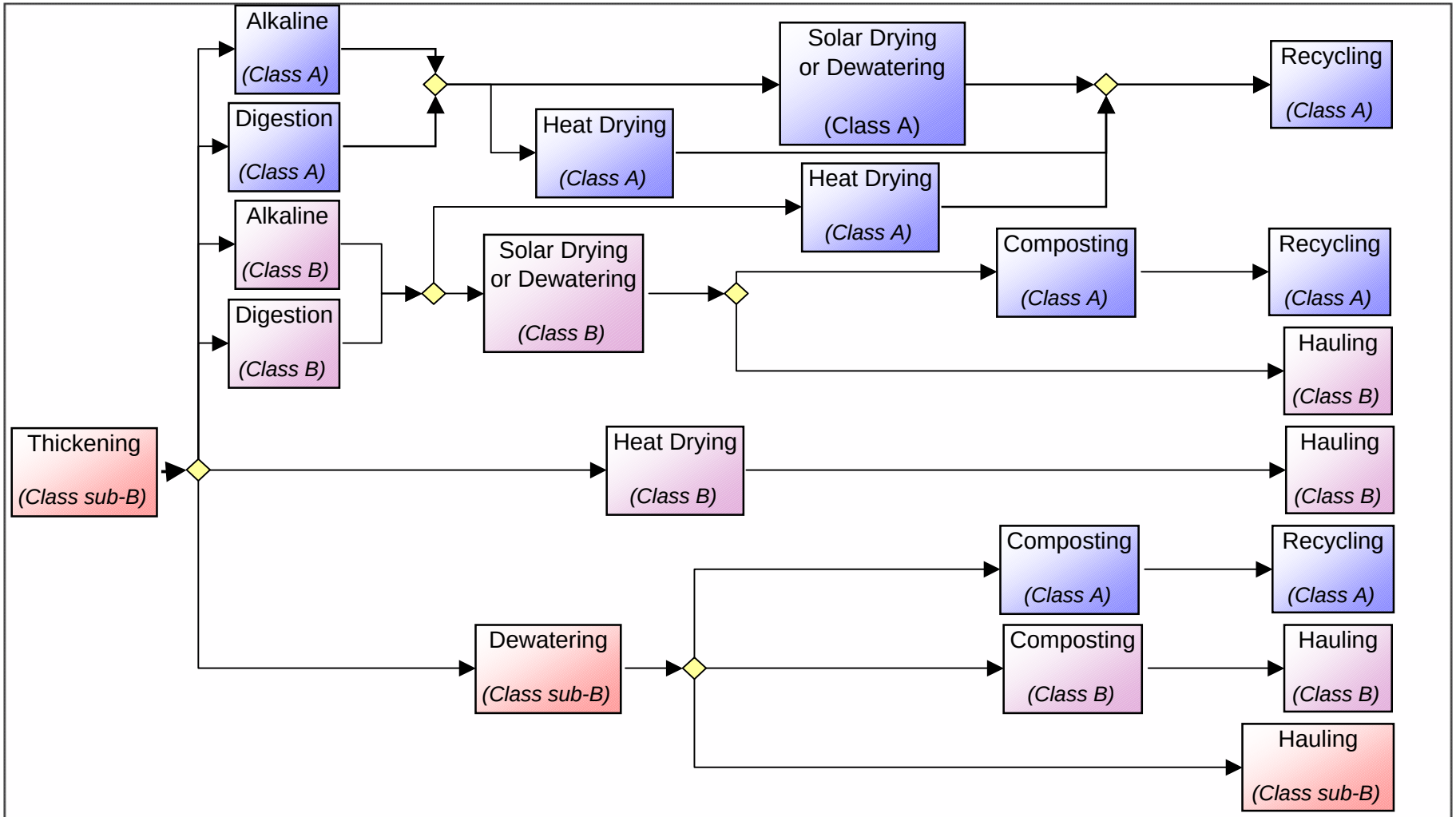

BIOSOLIDS ALTERNATIVES -
EXTENDED SECONDARY WAS

FIGURE 4.1

SAN LUIS OBISPO COUNTY
LOS OSOS WASTEWATER PROJECT DEVELOPMENT

carollo engineers

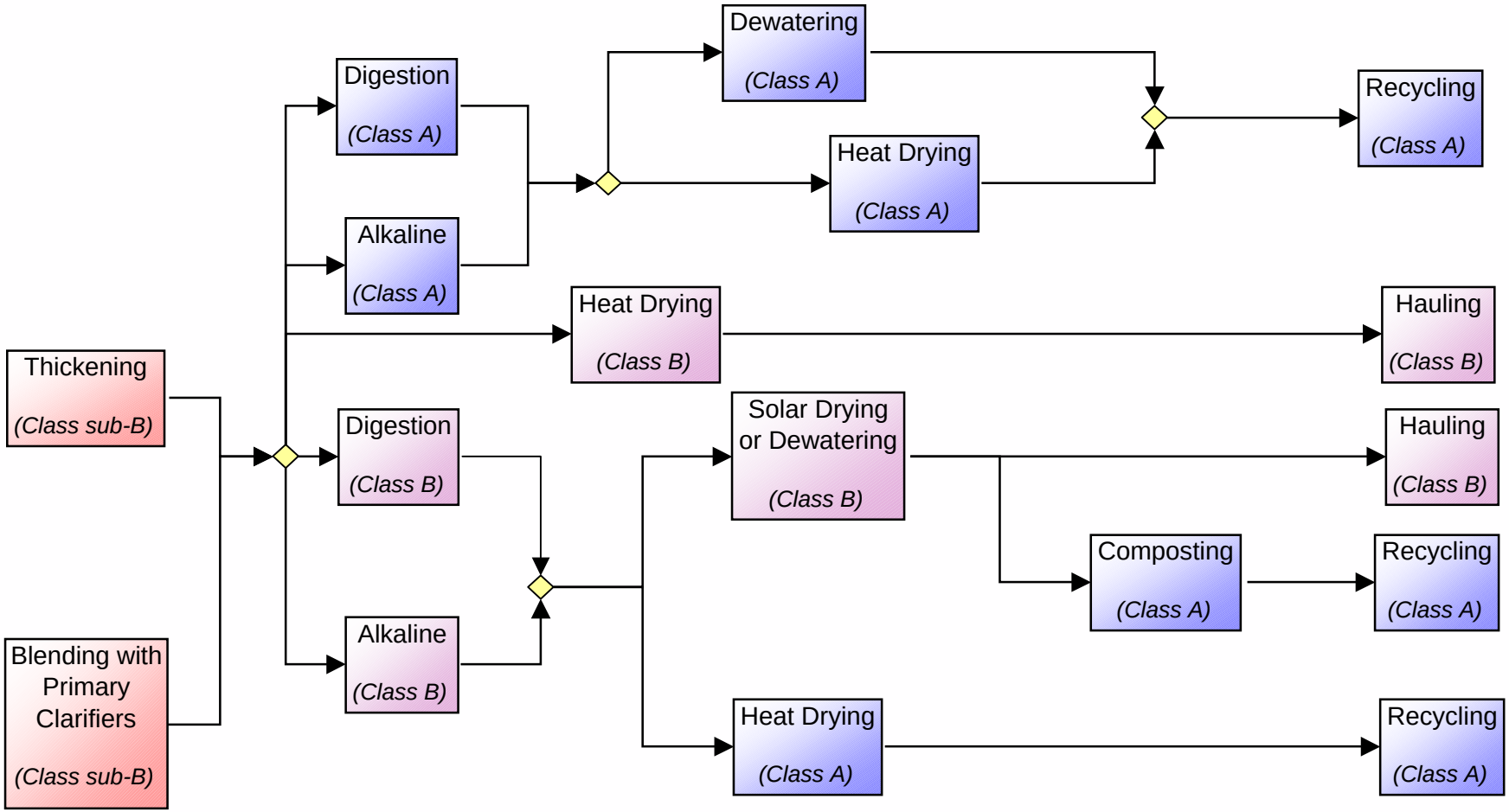

BIOSOLIDS ALTERNATIVES -
CONVENTIONAL SECONDARY WAS

FIGURE 4.2

SAN LUIS OBISPO COUNTY
LOS OSOS WASTEWATER PROJECT DEVELOPMENT

carollo engineers

4.5.2.2 Alkaline Stabilization

In lieu of digestion, wasted sludge can be stabilized either to Class A or B standards with the addition of alkaline material. In a vessel, agitated sludge is raised to a minimum of pH 12 for a minimum duration and temperature. Benefits of alkaline stabilization include minimal energy use and higher solids concentrations. Drawbacks of the process include a significant usage of alkaline chemicals thereby increasing the biosolids volume.

Recycling locations for alkaline stabilized biosolids would be limited to areas with low pH soil. In addition, distribution of high pH biosolids is considered difficult to permit and potentially very expensive to mitigate. This process would require high pH chemicals to be transported, regular handling of chemicals by staff, and transport of the high pH biosolids for local recycling or further treatment.

4.5.3 Dewatering Alternatives

4.5.3.1 Mechanical Dewatering

Mechanical dewatering processes include centrifuges, filter presses, drying beds, and lagoons. There are many process benefits to dewatering stabilized biosolids prior to disposal. Dewatering digested sludge further reduces the sludge volume following the stabilization process, therefore reducing the costs for chemicals, hauling, and disposal. In addition, dewatered sludge is easier to transport as it may be handled as a solid. Finally, dewatering sludge reduces odors, and minimizes leachate potential.

4.5.3.2 Solar Drying

Solar drying of sludge is a simple yet time consuming method of sludge dewatering. This method relies on the slow, sun-induced process of moisture evaporation from the sludge into the overlying atmosphere. There are four categories of sludge drying beds: conventional sand, paved, artificial media, and vacuum-assisted. Of these four, the first two are the most widely used for communities similar in size to Los Osos as the latter are more mechanically intensive and require higher capital and operating costs. To prevent percolation to the ground, paved sludge drying beds are generally required by the RWQCB in lieu of conventional sand beds. Biosolids, which are solar dried at least 90 days, meet Class B pathogen requirements but odor concerns limit the use of sludge beds for siting the Los Osos facility in close proximity to residential development.

Morro Bay has successfully used this method to produce a solids content of approximately 80 percent using a sludge bed design loading criteria of 16 pounds of dry solids per square foot per year (lbs. dry solids/ft^2-year).

4.5.3.3 Heat Drying

Heat drying reduces the moisture content and the pathogens in the biosolids by evaporation, producing a Class A or Class B biosolids product that is comparable to

composting. Heat drying may be accomplished by indirect and/or direct means, referring to whether or not the biosolids come into direct contact with the heat source. Heat drying has advantages to composting including much smaller land requirements and achieves significantly more volume reduction since it does not require the addition of mulch. In a period of hours, heat dryers are capable of producing a product with up to 95 percent dry solids content. The process has primarily been used in large facilities in the northeast United States. However, facilities are becoming more common as the process gains acceptance and the biosolids rules become more stringent.

4.5.4 Recycling/Disposal Processes

4.5.4.1 Composting

Composting is a proven technology following stabilization and dewatering with a demonstrated operating history to produce a soil conditioner. Production of Class A biosolids through composting requires the temperature of the biosolids to be raised to a minimum of 104 degrees Fahrenheit for 5 days with a minimum of 131 degrees Fahrenheit for 4 hours. Three common types of composting processes are windrows, aerated piles, and in-vessel systems. Green waste or wood chips are most commonly used as bulking agents and carbon sources for the process. The windrow system is the most common form of composting, where the biosolids and bulking agents are formed into long, open-air piles that are turned frequently. Aerated piles are rectangular piles of compost mixture that are supplied with air through blowers connected to perforated pipes running under the piles. In-vessel systems are enclosed reactors and have the benefit of strict odor, process, and emission controls.

Composting the biosolids with green waste such as tree trimmings and yard wastes was evaluated in the Final Project Report (Montgomery Watson Americas, 2001). The biosolids would require mechanical dewatering and combination with mulched green waste. The report assumed a windrow process for composting. The process was estimated to take 20 to 40 days and require a 2-acre site to produce Class A biosolids.

The City of Morro Bay has been windrow-composting a small portion of their biosolids with green waste generated in the local community. Due to space constraints at the plant, only one windrow (consisting of between 120 and 180 cubic yards of material) is constructed and managed at any given time. The biosolids composted onsite are distributed to both public and private entities for use on public parks and private flowerbeds.

4.5.4.2 Hauling

Based on the type of biosolids produced by the future facility several options for offsite disposal will be available. Although the biosolids are expected to be high quality due to the residential character of the community, the Los Osos facility must comply with the 40 CFR 503 regulations as they pertain to biosolids generators and the WDR specifications for proper treatment and disposal (WDR Sludge Specifications, Provision D). Several options

for offsite disposal of Class B biosolids were identified in previous studies including (Montgomery Watson Americas, 2001):

- McCarthy Farms (associated with the San Joaquin Composting facility) - Located in Kings County, McCarthy Farms will haul and land apply Class B biosolids.
- Yakima - Yakima will haul and land apply Class B biosolids to their site in Buttonwillow.
- Cold Canyon Landfill - Cold Canyon Landfill will accept 20 percent Class B biosolids.
- Chicago Grade Landfill - Chicago Grade Landfill will accept 50 percent Class B biosolids.

At an estimated current cost of $46 per wet ton, the San Joaquin Compost facility will accept dewatered WAS and/or sludge that has undergone anaerobic digestion but lacks sufficient treatment to meet EPA Class B regulations. This operation has been fully permitted to compost biosolids since 1995. To adhere to the EPA 40 CFR 503 Regulations, the biosolids undergo further pathogen and vector reduction at the composting facilities to achieve either Class A or Class B sludge characteristics.

The San Joaquin Composting facility is also fully permitted to receive any Class B biosolids, and currently charges approximately $42.00 per wet ton for hauling and tipping. Morro Bay currently produces a Class B sludge that is handled by San Joaquin Composting and directly land applied at McCarthy Farms.

4.5.4.3 Recycling

While Class B biosolids require the least treatment for direct land application by the EPA, this category of biosolids will likely be unaccepted in any nearby county. Development of a more regional market for a Class B product would escalate associated hauling costs and recent experience in other areas indicates that concerns of general public acceptance is being raised as well. Therefore, recycling of Class B biosolids will not be considered further.

Class A composted biosolids have a high marketing value for urban areas but extensive research will have to be completed to consider issues such as the current supply to demand ratio, potential market, and likely direction of future regulations. Implementation of a recycling program will require the development, monitoring, and application of cost effective Exceptional Quality (EQ) compost that meets the metals standards and is available to the public for use as a high quality soil amendment.

4.5.5 Additional Considerations

4.5.5.1 Local Land Disposal

Disposal of biosolids at a dedicated site within the community was considered unfeasible in the Final Project Report (Montgomery Watson Americas, 2001). It was considered difficult to obtain approval from state and regulatory agencies, potentially very expensive to mitigate and difficult to site due to significant sensitive species habitat, prime agricultural land and archeological sites in the Los Osos area. In addition, disposal did not comply with the

community desire to recycle. Due to these potential issues, this alternative will not be considered further.

4.5.5.2 Storage

Long term stockpiling is advantageous as a storage mechanism until the biosolids can be transported off the site for hauling or beneficial land application. Storage basins or lagoons can be operated to allow treatment to continue although the application of partially treated biosolids will likely increase nuisance odors. Storage areas should be lined or paved in order to prevent drainage and percolation problems. Morro Bay currently has approximately 3,150 square feet of stockpile area on site capable of storing their total current annual production of biosolids.

4.6 SUMMARY AND RECOMMENDATIONS FOR FURTHER STUDY

4.6.1 Screening Approach

A continuing trend throughout California is the elimination of biosolids land application. Counties that have banned, or practically banned, all biosolids applications. Other counties, such as Fresno, Kings, and Riverside have passed ordinances banning land application of Class B biosolids. Kern County has recently banned all biosolids application except on incorporated land.

Based on the uncertainty of the direction of the biosolids disposal regulations at the state and local levels, it is imperative that the Los Osos facility be designed in a manner that allows for the greatest treatment and disposal flexibility. At the same time, this flexibility must be sensitive of environmental constraints, community values, footprint availability, energy usage, continued operations and maintenance requirements, and capital cost. The following provides the basis for selection of the biosolids alternatives for further evaluation.

- **Class A biosolids production should include composting. Other options for long-term Class A production and management would pose a significant acceptance risk.**
- **Due to a local ordinance, non-composted Class A biosolids must either be hauled off-site or land applied at a regional location. The transportation costs and tipping fees do not favor hauling Class A over that of Class B. Therefore, there is no perceived benefit to the production of non-composted Class A biosolids.**
- **Alkaline stabilization will not be pursued due to the likely difficulties associated with regulatory approval and mitigation requirements while limiting the biosolids market.**

Based on these criteria, potentially viable alternatives for solids treatment and disposal are shown in Figure 4.3 and 4.4 for extended secondary WAS and conventional secondary WAS, respectively.

4.6.2 Potentially Viable Extended Secondary Alternatives

Six potentially viable alternatives have been selected for further evaluation with extended secondary type WAS. Figure 4.3 summarizes the biosolids treatment and disposal alternatives recommended for further evaluation.

4.6.2.1 Recycling of Digested/Composted Class A Biosolids

Since 2002, Morro Bay has produced EQ Class A composted biosolids through a combination of digestion and composting. Digestion may be utilized to provide stabilization to Class B standards. Composting Class B biosolids in lieu of sub-Class B greatly reduces the required retention time and space for the process. Conversely, this alternative has an increased operations complexity, requiring separate thickening, digestion, dewatering or solar drying, and composting. If local recycling is pursued, marketability and public acceptance of the biosolids products should be investigated as part of the planning process.

4.6.2.2 Hauling of Digested Class B Biosolids

Digestion is one of the most common technologies for producing a Class B biosolids product on-site. This alternative was evaluated in the Final Project Report (Montgomery Watson Americas, 2001). The report estimated solids processing would consist of gravity belt thickeners, aerobic digesters, and belt filter presses (mechanical dewatering) to produce a Class B biosolids. Depending on the site selected, solar drying beds may be considered as an alternative route to mechanical dewatering. Solar drying beds require less energy but significantly more space.

4.6.2.3 Hauling of Heat Dried Class B Biosolids

Although a newer technology, heat dryers can provide a large biosolids volume reduction within a relatively small amount of time. This alternative would consist of providing two 1-meter gravity belt thickeners and heat dryers for redundancy purposes. Heat drying can serve to meet the Class B biosolids criteria prior to hauling off-site while potentially containing odors within an enclosed structure.

4.6.2.4 Recycling of Composted Class A Biosolids

Presently, composting is the acceptable method for onsite production of Class A biosolids. The production of a Class A biosolids product on-site would include two, 1-meter gravity belt thickeners and mechanical dewatering processes for redundancy purposes. Solar beds can be substituted in lieu of mechanical dewatering. The biosolids would then be treated to Class A pathogen elimination standards through composting. If local recycling is pursued, marketability and public acceptance of the biosolids products should be investigated as part of the planning process.

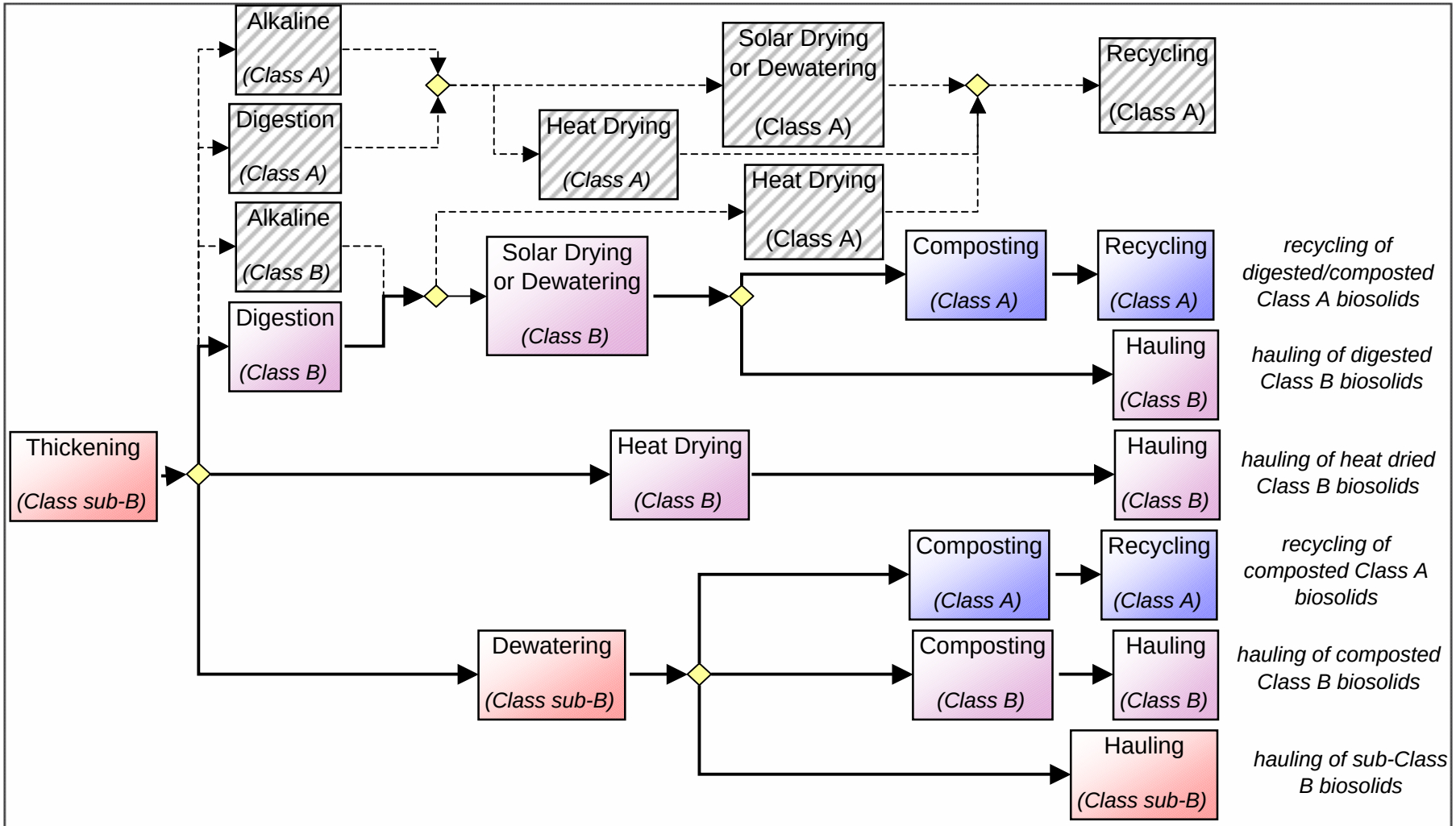

POTENTIALLY VIABLE BIOSOLIDS ALTERNATIVES - EXTENDED SECONDARY WAS

FIGURE 4.3

SAN LUIS OBISPO COUNTY
LOS OSOS WASTEWATER PROJECT DEVELOPMENT

carollo engineers

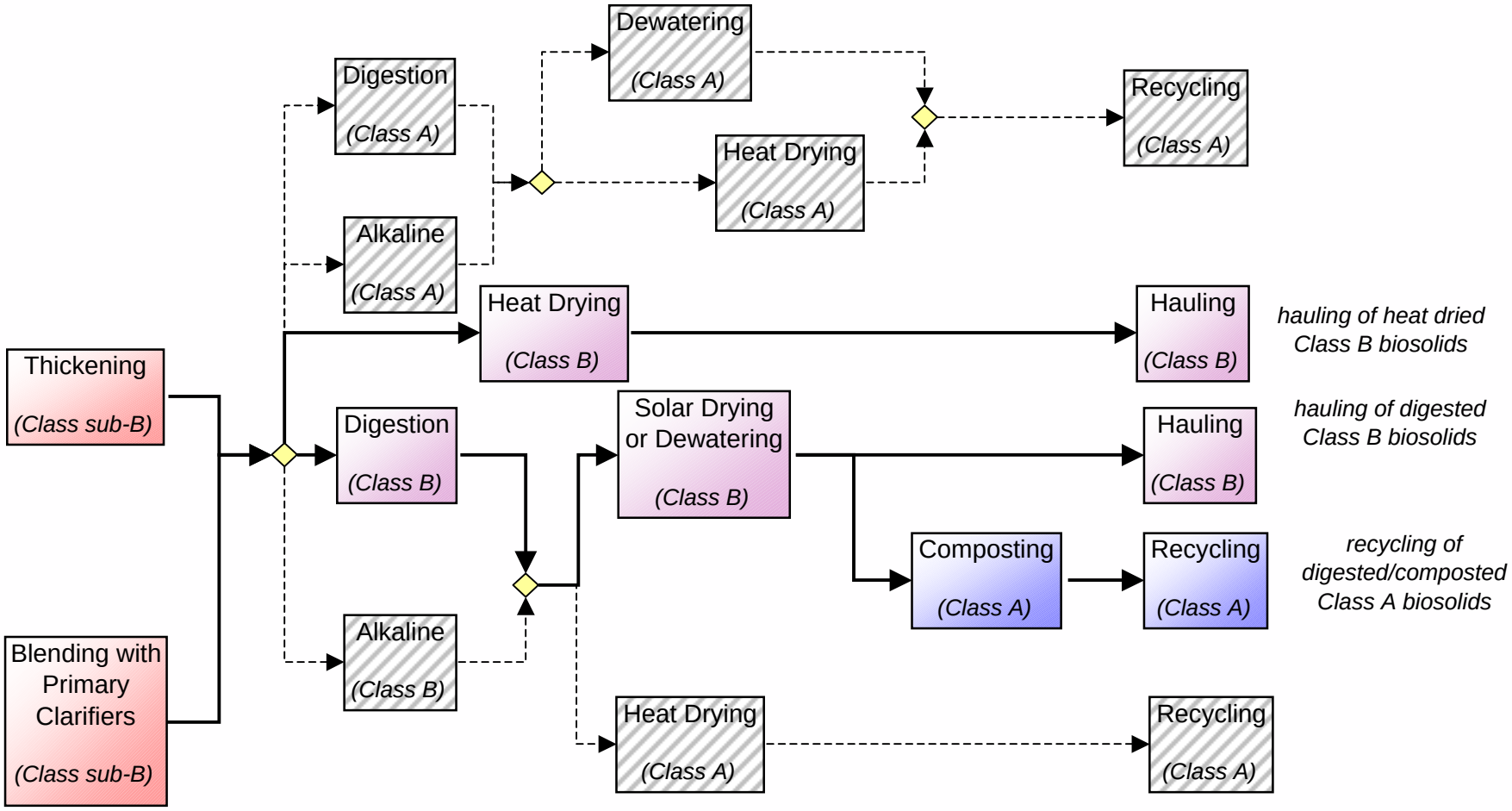

POTENTIALLY VIABLE BIOSOLIDS ALTERNATIVES - CONVENTIONAL SECONDARY WAS

FIGURE 4.4

SAN LUIS OBISPO COUNTY
LOS OSOS WASTEWATER PROJECT DEVELOPMENT

carollo engineers

4.6.2.5 Hauling of Composted Class B Biosolids

Composting represents the current locally accepted method for biosolids processing to be utilized for recycling within the County. This alternative would be composed of providing two 1-meter gravity belt thickeners and mechanical dewatering (belt filter presses) for redundancy purposes. Solar beds can be substituted in lieu of mechanical dewatering. The biosolids would then be sent to an on-site composting location to undergo pathogen and vector reduction to achieve Class B status prior to hauling.

4.6.2.6 Hauling of sub-Class B Dewatered Biosolids

As discussed previously, the WAS from an extended secondary process is typically well stabilized. Therefore, one of the benefits of this type of secondary process is that additional solids stabilization is not a necessary component of treatment prior to disposal. However, the production of biosolids not meeting the requirements for Class B results in an increased tipping fee charged by off-site facilities. Since the product is sub-Class B, it cannot be directly land applied and must first be processed further at an off-site facility.

This alternative results in minimal construction of on-site biosolids facilities but increases disposal costs. The biosolids facility may include two 1-meter gravity belt thickeners and mechanical dewatering or heat drying. Without stabilization facilities, the process footprint would likely require half of the building footprint estimated in the Wastewater Facilities Project Final Project Report (Montgomery Watson Americas, 2001). Depending on the site selected, solar drying beds may be considered as an alternative route to mechanical dewatering.

4.6.3 Potentially Viable Conventional Secondary Alternatives

Three potentially viable alternatives have been selected for further evaluation with WAS from conventional secondary processes. In lieu of gravity belt thickeners, the Los Osos facility may choose to blend the solids from the secondary process with wasted solids from a primary treatment process such as primary clarifiers. Figure 4.4 summarizes the biosolids treatment and disposal alternatives recommended for further evaluation. Hauling of Digested Class B Biosolids

As mentioned previously, any biosolids produced from a conventional secondary process must first be thickened and stabilized prior to hauling or undergoing further processing. The digesters will serve to contain the odors from unstabilized biosolids. This alternative is similar to hauling of digested Class B biosolids for extended secondary alternative footprints.

4.6.3.1 Hauling of Heat Dried Class B Biosolids

Heat dryers can stabilize raw sludge from secondary processes within a relatively small amount of time. This alternative would consist of providing thickened or unthickened biosolids to two heat dryers (for redundancy purposes). Heat drying can serve to meet the

Class B biosolids criteria prior to hauling off-site while containing odors within an enclosed structure. Without stabilization facilities, the process footprint would likely require about to half of the building footprint estimated in the Wastewater Facilities Project Final Project Report (Montgomery Watson Americas, 2001).

4.6.3.2 Recycling of Digested/Composted Class A Biosolids

Similar to the extended secondary type alternative, EQ Class A composted biosolids can be produced through a combination of on-site digestion and composting. As compared to the extended secondary type process, all biosolids stabilization will be provided by the digesters and composting. Digestion may be utilized to provide stabilization to Class B standards prior to composting. This alternative has comparable operations complexity to the parallel alternative described for extended secondary processes.

4.6.4 Recommendations for Further Study

Several key issues need to be examined during the detailed evaluation process to fully evaluation potentially viable solids treatment and disposal alternatives. The issues may have a significant impact on costs, future flexibility, acreage requirements, and/or other project components. Key issues include:

- Confirmation of projected biosolids production.
- Impact and treatment technology on solids treatment requirements.
- Future flexibility and options.
- Impact on odor control requirements.
- Life-cycle costs.
- General benefit alternative impacts including acreage requirements.
- Land requirements/impact on site selection.

TREATMENT FACILITY SITING ALTERNATIVES

5.1 PURPOSE

Each iteration of wastewater projects proposed for Los Osos since the late 1980's has included an assessment of potential sites suitable for the placement of a wastewater treatment plant, as shown on Figure 5.1. Because of the finite number of suitable sites in and around the community, many have been considered more than once, resulting in a wealth of existing information.

As stated in Chapter 1, the purpose of this most recent assessment of potential sites is to:

- Identify suitable locations for a wastewater treatment plant that enables the County to satisfy the mandates of the Regional Water Quality Control Board.
- Provide an assessment of alternate treatment plant locations to the previously approved site (also know as the Tri-W Site).
- Provide the basis for an assessment vote in accordance with Proposition 218 which will help pay for the project.

5.2 SITE REQUIREMENTS AND ISSUES

For purposes of this assessment, the siting requirements for a treatment plant are indicated in Table 5.1. Specific issues for each requirement pertaining to the Los Osos treatment facility siting are noted in the table and will be used to evaluate the alternatives throughout project alternative development.

Table 5.1 Site Requirements and Issues
Los Osos Wastewater Project Development
San Luis Obispo County

Siting Requirements	Issues
Acreage and Topography	• Must be of sufficient size and level topography to accommodate all of the facilities associated with a particular treatment technology. • More land intensive technologies have a higher potential to adversely affect sensitive biological, archaeological and/or agricultural resources.
Flood Hazard	• A suitable site for a wastewater treatment plant must avoid, or be protected from, the potential affects of flooding. • A treatment plant location should not contribute to downstream flooding or worsen an existing drainage problem. • Areas near Los Osos Creek and its tributaries are subject to flooding during major storm events (See Section 5.3.2).
Access to Infrastructure	• A suitable site must be accessible to supporting infrastructure – Roadways of sufficient size and capacity to accommodate the types of service vehicles and level of traffic anticipated. – A stable source of water and electricity.

Table 5.1 Site Requirements and Issues
Los Osos Wastewater Project Development
San Luis Obispo County

Siting Requirements	Issues
Sensitive Resources	
Agricultural Land	• Farmland suitability classifications for the properties as mapped by the California Department of Conservation (See Section 5.3.2). • The California Land Conservation Act (California Government Code Section 51290 et seq.) encourages the conservation of agricultural lands by providing a tax incentive to land owners who contract with the County to restrict land uses to agriculture and compatible uses. – Properties subject to an LCA contract must remain in agricultural use for the duration of the contract, a minimum of ten years. – A property owner may cancel the contract by filing a Notice of Non-renewal and the contract is terminated at the end of ten years. – The law provides for the cancellation of a contract but only under special circumstances and only after the Board of Supervisors makes certain specific findings. – The Gorby and Branin properties are subject to an Agricultural Preserve, making them eligible for an LCA contract.
Biological Resources	• The Los Osos area provides habitat for a number of special status species, as well as other sensitive biological resources that include riparian corridors (Los Osos Creek) and wetlands. Special-status species are plants and animals that are either listed as 'endangered' or 'threatened' under the Federal or California Endangered Species Acts, listed as 'rare' under the California Native Plant Protection Act, or considered to be rare (but not formally listed) by resource agencies, professional organizations, and the scientific community. • The area contains Environmentally Sensitive Habitat Areas (ESHA), which are subject to additional protections prescribed by the California Coastal Act.
Archaeological Resources	• Over 60 archaeological sites have been identified among the stabilized dunes of Los Osos and extending to the east along both sides of Los Osos Creek and beyond. • The potential to un-earth previously undiscovered archaeological resources should be considered high, especially for sites near Los Osos Creek.
Hydro-Geology, Soils and Geological Hazards	• Geologic constraints that could affect the suitability of a site for treatment facilities include: – The presence of an active fault trace. – The presence of unstable or expansive soils. – Shallow groundwater. – Slope instability. • The Paso Robles Formation comprises the plateau and gently rolling hill area east of the alluvial deposits adjacent to Los Osos Creek where the majority of potential sites are located. Sediments of the Paso Robles Formation are generally equivalent to stiff to hard cohesive soils and medium dense to very dense granular soils that are less suitable for farming but are suitable for building sites (See Section 5.3.2). • The Los Osos fault is considered 'active' and a portion of the fault zone near the intersection of Los Osos Valley Road and Foothill Boulevard, about 7 miles to the southeast, lies within a Seismic Special Study Zone as prescribed by the State of California Alquist-Priolo Special Studies Zones Act. The potential exists for fault rupture to affect sites in the vicinity.

Table 5.1 Site Requirements and Issues
Los Osos Wastewater Project Development
San Luis Obispo County

Siting Requirements	Issues
Visual Resources	• The placement of treatment facilities along these corridors will need to include architectural and landscape mitigation to prevent adversely impacting scenic resources.
Proximity of Sensitive Receptors	• The design of a treatment plant must consider the management of odors and impacts to surrounding sensitive receptors, which include residential neighborhoods, farms and ranches, businesses, and public/quasi-public facilities (schools, churches, etc.).
Regulatory Issues	• Land use within the unincorporated County is governed by the San Luis Obispo County General Plan and Land Use Ordinance. • An Agriculture and Open Space Element has been adapted by the County to guide the protection of significant agricultural resources. • The community of Los Osos and the area inland of Los Osos Creek fall within the Coastal Zone as defined by the California Coastal Act of 1976. Provisions of the Coastal Act are aimed at protecting important coastal resources and 'environmentally sensitive habitat areas'. Policies of the Coastal Act establish fairly precise criteria to govern the location and design of a 'wastewater treatment works' within the Coastal Zone. • The federal Clean Water Act establishes standards for water quality as well as governing activities that may impact 'waters of the United States', such as perennial streams and estuaries. • And lastly, the Los Osos area is known to support habitat for a number of species listed in accordance with the California and federal Endangered Species Acts. These laws address direct and indirect impacts to special status plant and animal species and set forth a process through which these species are to be protected from land development activities.
Proximity to Collection Service Area and Disposal Sites	• The more distant the treatment plant is from the collection area, the greater is the potential for construction and operational impacts associated with the collection main that conveys wastewater to the plant.
Other Site-Specific Factors	• Other factors to be considered include (but are not limited to) easements or other private restrictions on the title of a given site.

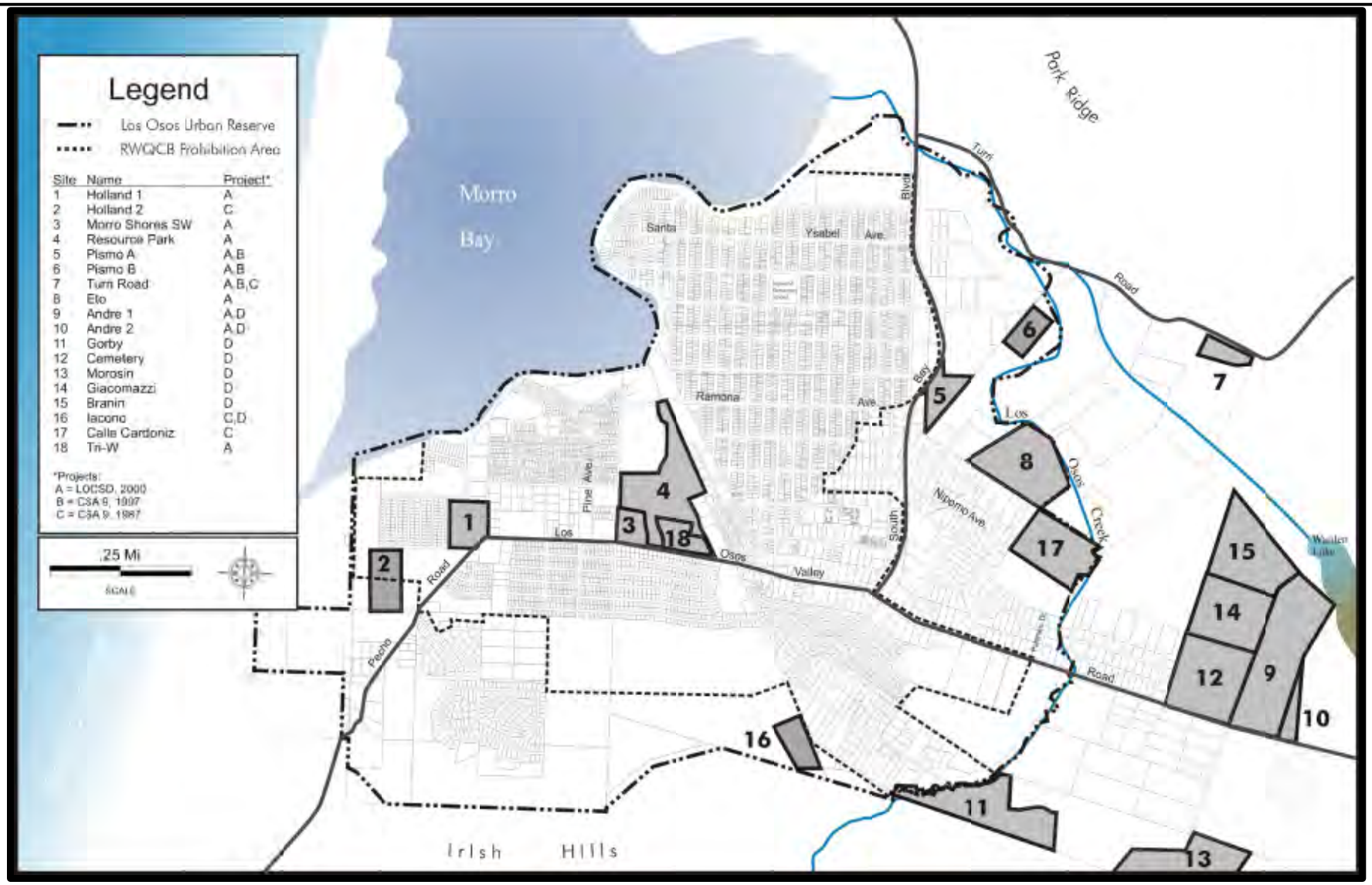

Figure No.5.1
Sites Previously Considered for A Treatment Plant
LOS OSOS WASTEWATER PROJECT DEVELOPMENT
San Luis Obispo County

Figure Provided By
Crawford, Multari & Clark Associates

carollo engineers

5.3 SUMMARY AND RECOMMENDATIONS FOR FURTHER STUDY

5.3.1 Screening Approach

The previous assessments of potential treatment plant sites considered a similar range of constraints, guided by the particular project objectives. Previous plant sites were chosen to afford a broad range of locational options, with at least one site located centrally in the community, at least one located on the edge, and at least one site located outside the community (see Figure 5.1). Over time, however, the environmental, regulatory, social and economic circumstances affecting the design and placement of a treatment plant in Los Osos have changed significantly, which in turn has resulted in far more stringent locational constraints relating to:

- The protection of water quality (surface and groundwater, and the Morro Bay estuary)
- The known presence of federally protected plant and animal species
- The protection of archaeological resources
- The protection of resources governed by the California Coastal Acts

5.3.2 Potentially Viable Alternatives for Detailed Evaluation

In light of these considerable regulatory and environmental constraints, the previous "center-edge-out" of town approach appears to no longer be practical. Moreover, previous investigations of the remaining undeveloped sites within the Los Osos urban area west of Los Osos Creek (Figure 5.1) have shown them all to be constrained by one or more of these environmental and regulatory factors. **Therefore, the remaining sites within, or on the edge of, the urban area that provide no substantial environmental or regulatory advantage over the Tri-W site, such as the Iacano, Eto, and Walker properties, have been excluded from further consideration.**

The 32.4-acre Andre 1 property (APN 067-031-008) was also eliminated from further consideration because a power line easement owned by Pacific Gas and Electric Company prohibits structures, which would make construction of a treatment plant on the remaining portion infeasible.

The remaining properties are all located outside of the Los Osos urban area east of Los Osos Creek on properties used primarily for agricultural operations. Recognizing the agricultural value of these properties, a further screening criteria was to favor sites comprised of less productive farm land, which is generally located on the ridge east of the prime agricultural soils located along the alluvial plain adjoining Los Osos Creek (Figure 5.3). There is one exception: the northerly portion of the Gorby property (APN 074-225-009), which is also prime agricultural land. However, a treatment facility may be located in place of existing buildings.

The screening criteria yielded the properties shown on Figure 5.2. Figure 5.3 is a close up aerial of each study site including topography. Table 5.2 summarizes the constraints for each site.

Figure 5.4 shows areas subject to flooding and geologic constraints. Areas near Los Osos Creek and its tributaries are subject to flooding during major storm events.

Figure 5.5 shows the farmland suitability classifications for the purposes under consideration. Soils on all of the properties are Class III (if irrigated), based on the definitions used by the Natural Resources Conservation Service (NRCS). Class III soils have severe limitations that reduce the choice of plants or require special conservation practices, or both. San Luis Obispo County considers these soils to be Class III only if irrigation is provided. The northerly portions of the Gorby property (APN 074-225-009) is mapped as Class I, which is the highest (most productive) farmland classification.

Figure 5.6 shows soil types and regional geology. Sediments of the Pas Robles Formation, where the majority of the potential sites are located, are generally equivalent to stiff to hard cohesive soils and medium dense to very dense granular soils that are less suitable for farming but are suitable for building sites.

5.3.3 Recommendations for Further Study

During the detailed evaluation process, several key issues need to be examined to fully evaluated the potentially viable treatment facility siting alternatives. The issues may have a significant impact on costs, permitting, and environmental mitigation and/or project components. The potentially viable sites should be subjected to site-specific constraints analyses that include at least the following:

- A complete title report.
- Biological assessment to identify the presence and extent of sensitive habitats (especially wetlands) and to determine the presence or absence of special status plant and animal species.
- Phase I archaeological assessment.
- Geotechnical assessment to determine the presence or absence of the Los Osos fault, any slope stability issues, depth to groundwater, liquefaction, and the expansiveness and percolation capacity of soils.
- Assessment of applicable regulatory requirements, and especially those relating to the protection of Environmentally Sensitive Habitat Areas (ESHA).
- An assessment of potential drainage issues.
- Traffic/circulation issues and accessibility.
- An assessment of potential impacts to productive agricultural resources.
- An assessment of potential visual impacts.
- An assessment of potential impacts to sensitive receptors.

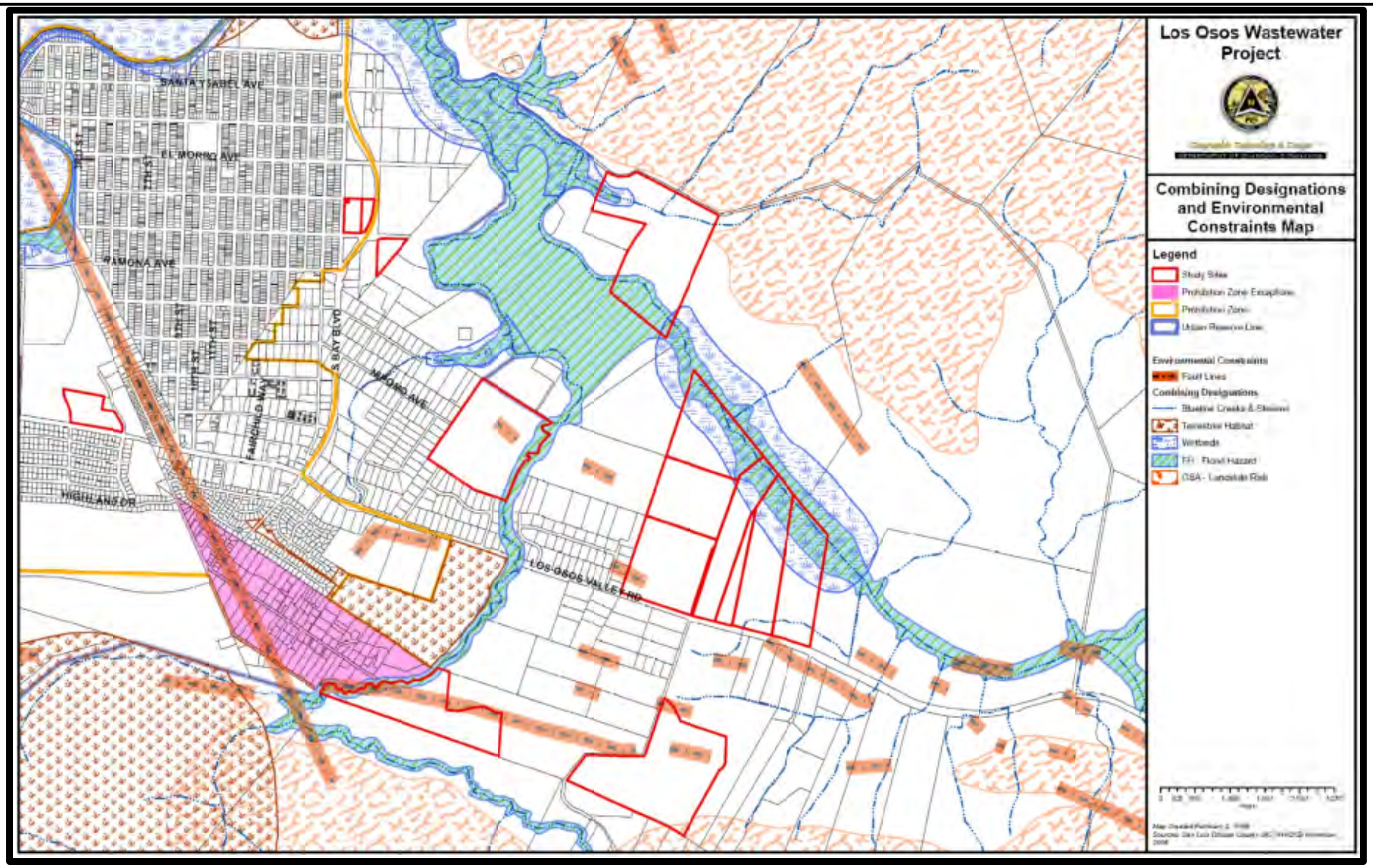

Figure No.5.2
Areas Subject To Flooding and Geologic Constraints
LOS OSOS WASTEWATER PROJECT DEVELOPMENT
San Luis Obispo County

Figure Provided By
Crawford, Multari & Clark Associates

carollo engineers

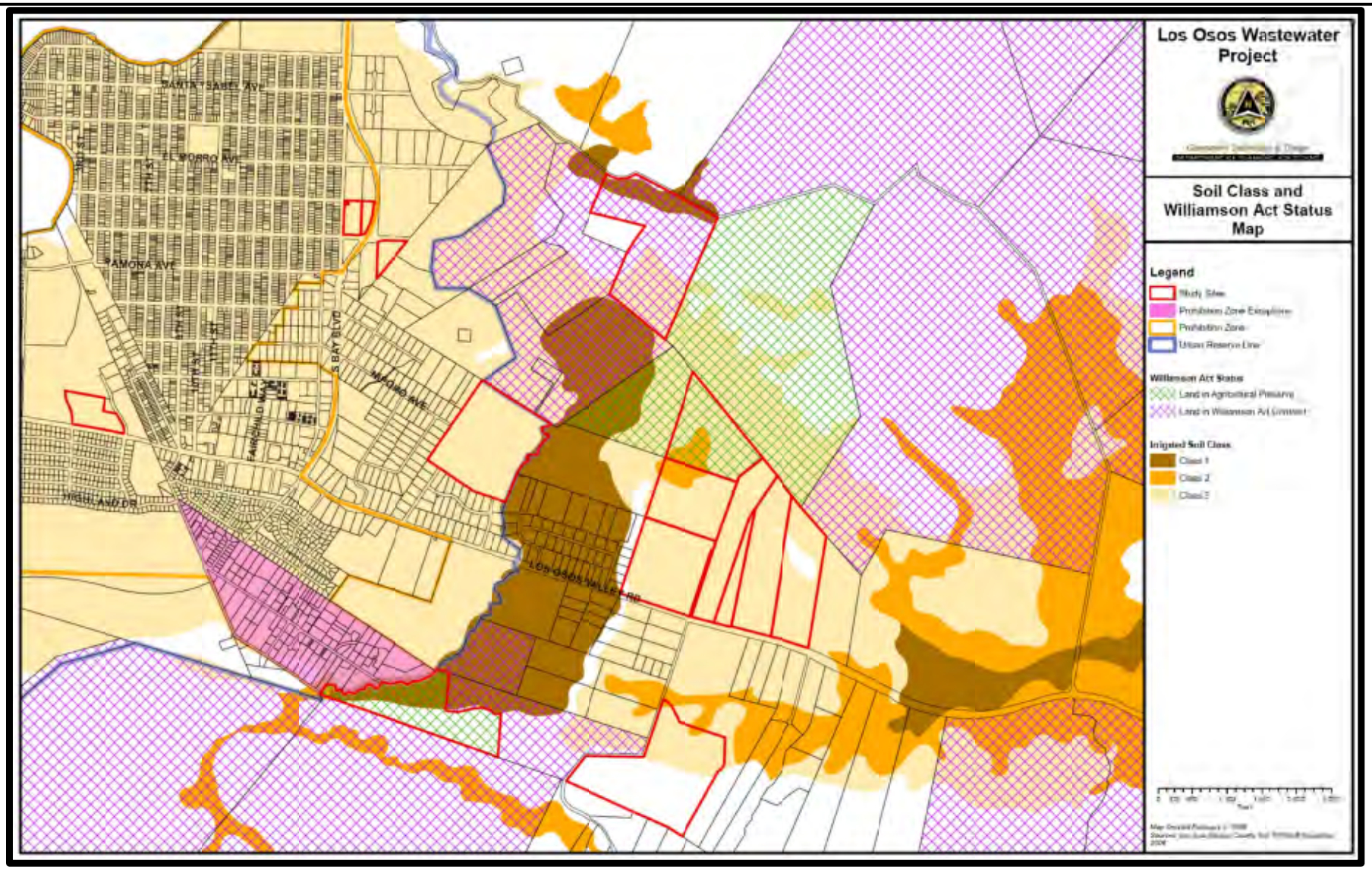

Figure No.5.3
Agricultural Land Classifications and Conservation Status
LOS OSOS WASTEWATER PROJECT DEVELOPMENT
San Luis Obispo County

Figure Provided By
Crawford, Multari & Clark Associates

carollo engineers

Table 5.2 Summary Assessment of Potentially Viable Treatment Sites
Los Osos Wastewater Project Development
San Luis Obispo County

Property	APN	Acre-age	Description/ Topography	Flood Hazard	Access to Infrastructure	Agricultural Land	Biological Resources	Archaeological Resources	Hydro-Geology, Soils and Geologic Hazards	Visual Resources	Proximity of Sensitive Receptors	Proximity to Collection Area and Disposal Sites	Other Site-Specific factors	Advantages	Disadvantages
Cemetery Property	074-222-014	48.1	Rectangular parcel that slopes gently downward to the north; westerly boundary slopes downward to the west to a dirt road that provides access to surrounding farming operations; southerly third of the site is used for a cemetery, about 7 acres in the northwest corner is cultivated with row crops, with the remainder fallow; no trees, or other natural features; useable portion of site is about 22 acres.	• None	• Close to LOVR, with level, unimproved road bordering on the east that intersects LOVR opposite Clark Valley Road • No public water supply • Electricity at LOVR?	• Class III • Northwest portion appears irrigated • No LCA contract	• No apparent habitat value	• Previously identified archaeological site (site 25)	• Soils are suitable for building • No landslides • Potential for Los Osos fault	• Site is close to LOVR and visible to passing motorists • Gently sloping terrain may help reduce apparent height /prominence of buildings	• Cemetery immediately adjacent to the south • Residences on five-acre lots adjacent to the west • Surrounding properties are ag operations	• Useable portion of site is within one eighth mile of LOVR • Site appears large enough to support some level of on-site disposal	• No known easements or other restrictions	• Effective size of the site (about 22 acres) is sufficient to accommodate a wide range of treatment technologies and on-site disposal • Accessible from LOVR via intersection with Clark Valley Road • No apparent habitat value • No known private easement constraints • Topography may allow for screening from LOVR • Close to service area • Less prime farm land, no LCA contract • No potential for flooding.	• Archaeological resources on property • Close to cemetery and closer to residences to the west • Expansion plans of cemetery are unknown and may affect availability • Los Osos fault may be present • Expansion plans for cemetery unknown
Giacomazzi	067-011-022	37.1	Rectangular parcel that slopes gently downward to the north and east toward an ephemeral drainage that extends along the easterly portion of the site to Warden Lake (offsite); collection of farm-related buildings along the western border; level areas have been cultivated with row crops (irrigation?); numerous tall trees around the buildings and in the drainage channel; useable portion of site is about 20 acres.	• None; however, drainage channel conveys seasonal runoff	• Close to LOVR, with level, unimproved road bordering on the east that intersects LOVR opposite Clark Valley Road • No public water supply • Electricity at LOVR?	• Class III • No LCA contract	• Ephemeral drainage and surrounding sloping (uncultivated) areas support native and non-native grasses • Numerous tall trees in channel and adjacent to buildings • Drainage channel may support riparian species	• Previously identified archaeological site (site 25) may extend onto this site	• Soils are suitable for building • No landslides • Potential for Los Osos fault	• Site is about one third mile from LOVR and partially visible to passing motorists • Gently sloping terrain may help reduce apparent height /prominence of buildings	• Cemetery is about one quarter mile to the south • Residences on five-acre lots adjacent to the south and west • Surrounding properties are ag operations	• Useable portion of site is within one eighth mile of LOVR • Site appears large enough to support some level of on-site disposal	• No known easements or other restrictions	• Effective size of the site (about 20 acres) is sufficient to accommodate a wide range of treatment technologies and on-site disposal • Accessible from LOVR via intersection with Clark Valley Road • No known private easement constraints • Topography may allow for screening from LOVR • Close to service area • Less prime farm land, no LCA contract • More removed from receptors and visibility from LOVR.	• Ephemeral drainages may pose drainage issues with design and may support sensitive biological resources • Archaeological resources may extend onto property from the south • Los Osos fault may be present • Requires access over intervening properties.

Table 5.2 Summary Assessment of Potentially Viable Treatment Sites
Los Osos Wastewater Project Development
San Luis Obispo County

Property	APN	Acre-age	Description/ Topography	Flood Hazard	Access to Infrastructure	Agricultural Land	Biological Resources	Archaeological Resources	Hydro-Geology, Soils and Geologic Hazards	Visual Resources	Proximity of Sensitive Receptors	Proximity to Collection Area and Disposal Sites	Other Site-Specific factors	Advantages	Disadvantages
Andre 2	067-031-011	9.87	Narrow, triangular shaped parcel bordering LOVR; site slopes gently downward to the north; one small building; access provided from adjacent parcel in common ownership; one group of large trees that follows an ephemeral drainage that crosses the northerly portion of the site; useable area of site is about 9 acres, but narrow triangular shape limits development flexibility.	• None; however, drainage channel conveys seasonal runoff	• Borders LOVR, with level, unimproved road providing access from adjacent property to the west that intersects LOVR east of Clark Valley Road • No public water supply • Electricity at LOVR?	• Class III • No LCA contract	• Site supports native and non-native grasses • Ephemeral drainage contains numerous tall trees in channel	• No known archaeological sites	• Soils are suitable for building • No landslides • Potential for Los Osos fault	• Site is adjacent to LOVR where the largest developable area is also located • Would be highly visible to passing motorists • Gently sloping terrain may help reduce apparent height /prominence of buildings, but site boundaries narrow to the north	• Cemetery is about one quarter mile to the west • Residences on five-acre lots are about one-half mile to the west and to the south • Cluster ag-related buildings (including two residences) on properties to the east • Church is located along LOVR about one-quarter mile to the west • Surrounding properties are ag operations	• Most useable portion of site is adjacent to LOVR • Site appears too small and irregularly shaped to support on-site disposal	• No known easements or other restrictions	• Directly accessible from LOVR • No known private easement constraints • Topography may allow for screening from LOVR • Slightly farther from service area but abuts LOVR • Less prime farm land, no LCA contract • More removed from receptors • No known archaeological resources	• Effective size (about 9 acres) and triangular shape may limit the types of treatment and/or disposal technologies. • Useable portion of site is fairly visible from LOVR. • Ephemeral drainage may support some habitat value. • Vehicle speeds on LOVR are high in this area, which would likely require channelization (east-bound left turn lane, west-bound deceleration lane) for vehicle access.
Morosin /FEA	067-171-084	81.2	Irregularly shaped parcel located south of LOVR on the east side of Clark Valley Road at the base of the Irish Hills; southerly half of the site slopes upward into the foothills and is composed of native vegetation; northerly half of site is relatively flat and has been cultivated with row crops; site contains a church with parking and access road on a small knoll at the northerly border of the site; cluster of ag-related buildings located at the base of the foothills; water tank is located about 100 meters upslope from the ag buildings; useable area of site is about 35 acres.	• None	• Close to LOVR, with level, borders Clark Valley Road, which is a paved, two-lane county road • No public water supply • Electricity?	• Class III on the northerly 35 acres • Native soils and vegetation on the remainder • No LCA contract on site • Property adjacent to the west is governed by an LCA contract	• Southerly (and un-buildable) portion of the site is composed of native vegetation which may support special status plant and animals species • Cultivated area appears to have no habitat value • No creeks or ephemeral drainages	• No known archaeological sites	• Soils on level portion of site are suitable for building • No landslides • Potential for Los Osos fault	• Site borders Clark Valley Road which provides access to a small number of ranches and farms in the Clark Valley to the south • Site is about one-half mile from LOVR and would be at least partially visible to passing motorists • Intervening properties are mostly level and cultivated periodically with row crops	• Church located on site • Various farming /equestrian operations on surrounding properties of varying size • Residences on five-acre site located about one mile to the west	• Useable portion of site is within one half mile of LOVR • Site appears large enough to support some level of on-site disposal	• PG&E easement affects westerly 420 feet of site where buildings are prohibited • Property immediately adjacent to the north is subject to a conservation easement	• Effective size of the site (about 35 acres) is sufficient to accommodate a wide range of treatment technologies and on-site disposal • Accessible from LOVR via intersection with Clark Valley Road • Less visible from LOVR which may reduce need for screening • Less prime farm land, no LCA contract • More removed from receptors • No known archaeological resources • No flooding issues	• Los Osos fault may be present • Somewhat farther to service area than other sites • Church and housing located on property • Sensitive biological resources upslope to the south • PG&E electrical transmission line easement affects the westerly 420 feet of site where buildings would not be allowed.

Table 5.2 Summary Assessment of Potentially Viable Treatment Sites
Los Osos Wastewater Project Development
San Luis Obispo County

Property	APN	Acre-age	Description/ Topography	Flood Hazard	Access to Infrastructure	Agricultural Land	Biological Resources	Archaeological Resources	Hydro-Geology, Soils and Geologic Hazards	Visual Resources	Proximity of Sensitive Receptors	Proximity to Collection Area and Disposal Sites	Other Site-Specific factors	Advantages	Disadvantages
Branin	067-011-020	42.2	Irregularly shaped lot north of LOVR and adjacent to Warden Lake which consists of native wetland and riparian vegetation; site slopes to the north toward Warden lake and contains two ephemeral drainages; useable portion of the site appears to be periodically cultivated and consists of 15 - 25 acres.	• Northerly third of site lies within the flood plain of Los Osos Creek /Warden Lake	• Close to LOVR, but no apparent improved access • No public water supply • Electricity at LOVR?	• Class III on the southerly 25 acres • Native soils and wetland /riparian vegetation on the remainder • No LCA contract on site	• Northerly third of the site is composed of native vegetation which may support special status plant and animals species • Cultivated area appears to have no habitat value • Ephemeral drainages appear to have limited habitat	• Previously identified archaeological site (site 13) extends onto this site	• Soils on level portion of site are suitable for building • May be potential for landslides on slopes leading down to Warden Lake • Potential for Los Osos fault	• Site is about two- thirds mile from LOVR and marginally visible to passing motorists • Sloping terrain may help reduce apparent height /prominence of buildings	• Cemetery is about two-thirds mile to the south • Residences on five-acre lots located about two-thirds mile to the south and west • Surrounding properties are ag operations	• Useable portion of site is about two-thirds mile from LOVR, but appears to have no improved access • Site appears large enough to support some level of on-site disposal	• No known easements or other restrictions	• Effective size of the site (about 15 - 25 acres) is sufficient to accommodate a wide range of treatment technologies and some on-site disposal • Topography may allow for screening from LOVR • Less prime farm land, no LCA contract • More removed from receptors and visibility from LOVR	• Ephemeral drainages may pose drainage issues with design and may support sensitive biological resources • Site drains toward Warden lake, a tributary of Los Osos Creek • Los Osos fault may be present • Northerly portion of site (Warden Lake area) is subject to flooding • Subject to agricultural preserve • Requires access over intervening properties
Gorby	074-225-009	51.7	Irregularly-shaped lot located south of LOVR adjacent to the east side of Los Osos Creek; southerly half of the site slopes upward into the foothills of the Irish Hills and contains native vegetation; the north-westerly portion is level and contains a dwelling and equestrian facilities that include horse paddocks and riding areas. Several ornamental trees occupy the northwesterly portion of the site; level buildable portion of the site is triangular and consists of about 20 – 25 acres.	• Site borders Los Osos Creek which is subject to periodic flooding in major storm events • Buildable area appears to be outside the 100 year flood plain	• Two lane dirt road provides access to LOVR opposite Lariat Drive • No public water supply • Electricity?	• Class I on level area • No LCA contract	• Southerly (and un-buildable) portion of the site is composed of native vegetation which may support special status plant and animals species • Los Osos Creek supports mature native riparian vegetation • Equestrian area appears to have no habitat value	• Numerous archaeological sites have been identified along Los Osos Creek which have been mapped to this property	• Soils on level portion of site are suitable for building • No landslides • Ootential for Los Osos fault	• Site is about two- thirds mile from LOVR and marginally visible to passing motorists • Shape of lot and intervening vegetation may help reduce prominence of buildings	• Dwellings on five-plus acre lots located immediately to the west of Los Osos Creek • Mobile home park located within one-quarter mile to the northwest • To the north are large-lot subdivisions with ag-related operations • To the east is a church	• Useable portion of site is about two-thirds mile from LOVR with access provided by unimproved road which also serves the intervening agricultural operations • Site may be large enough to support some level of on-site disposal, including creek discharge	• No known easements or other restrictions	• Buildable area of the site (about 6 - 8 acres) is sufficient to accommodate some of the treatment technologies • May be accessible from LOVR • Less visible from LOVR	• Los Osos fault may be present • Los Osos creek is subject to flooding • Buildable area is Class I agricultural land and subject to agricultural preserve unless currently developed area used (6 - 8 acres) • Sensitive receptors to the west of creek • Vehicle speeds on LOVR are high in this area, which would likely require channelization (west-bound left turn lane, east-bound deceleration lane) for vehicle access; Creek and upland area support sensitive biological resources • Known unwilling seller

Table 5.2 Summary Assessment of Potentially Viable Treatment Sites
Los Osos Wastewater Project Development
San Luis Obispo County

Property	APN	Acre-age	Description/ Topography	Flood Hazard	Access to Infrastructure	Agricultural Land	Biological Resources	Archaeological Resources	Hydro-Geology, Soils and Geologic Hazards	Visual Resources	Proximity of Sensitive Receptors	Proximity to Collection Area and Disposal Sites	Other Site-Specific factors	Advantages	Disadvantages
Robbins 1	067-031-037	41.1	Mostly rectangular-shaped lot abutting the north side of LOVR east of Clark Valley Road; site contains at least one dwelling and slopes to the north toward Warden Lake; large mature trees surround the farm buildings; site may be used for grazing; buildable portion of the site is about 30 acres.	• Northerly portion of site lies within the flood plain of Warden Lake	• Site abuts LOVR • No public water supply • Electricity?	• Class III on the southerly 30 acres • Native soils and wetland /riparian vegetation on the remainder • No LCA contract on site	• Northerly portion of the site is composed of native vegetation /wetlands which may support special status plant and animals species • Fallow area appears to have limited habitat value	• No known archaeological sites	• Soils on level portion of site are suitable for building • No landslides • Potential for Los Osos fault	• Site is adjacent to LOVR, and would be fairly visible to passing motorists • Gently sloping terrain may help reduce apparent height /prominence of buildings	• Cemetery and residences on five-acre lots are about one mile to the west • One building (residence) on property to the east • Church is located along south side of LOVR about one-half mile to the west • Surrounding properties are ag operations	• Site abuts LOVR and appears large enough to support some level of on-site disposal	• No known easements or other restrictions	• Effective size of the site (about 30 acres) is sufficient to accommodate a wide range of treatment technologies and on-site disposal • Directly accessible from LOVR • No known private easement constraints or archaeological resources • Topography may allow for screening from LOVR • Less prime farm land, no LCA contract • More removed from receptors and visibility from LOVR	• Site drains toward Warden lake, a tributary of Los Osos Creek • Los Osos fault may be present • Northerly portion of site (Warden lake area) is subject to flooding • Vehicle speeds on LOVR are high in this area, which would likely require channelization (east-bound left turn lane, west-bound deceleration lane) for vehicle access • Furthest property east of service area
Robbins 2	067-031-38	43.5	Mostly rectangular-shaped lot abutting the north side of LOVR east of Clark Valley Road; site slopes to the north toward Warden Lake; site may be used for grazing; buildable portion of the site is about 35 acres.	• Northerly portion of site lies within the flood plain of Warden Lake	• Site abuts LOVR • No public water supply • Electricity?	• Class III on the southerly 35 acres; native soils and wetland/riparian vegetation on the remainder • No LCA contract on site	• Northerly portion of the site is composed of native vegetation /wetlands which may support special status plant and animals species • Fallow area appears to have limited habitat value	• No known archaeological sites	• Soils on level portion of site are suitable for building • No landslides • Potential for Los Osos fault	• Site is adjacent to LOVR, and would be fairly visible to passing motorists • Gently sloping terrain may help reduce apparent height /prominence of buildings	• Cemetery and residences on five-acre lots are about one mile to the west; at least two buildings (residences) on property to the east • Church is located along south side of LOVR about one-half mile to the west • Surrounding properties are ag operations	• Site abuts LOVR and appears large enough to support some level of on-site disposal	• No known easements or other restrictions	• Effective size of the site (about 35 acres) is sufficient to accommodate a wide range of treatment technologies and on-site disposal • Directly accessible from LOVR • No known private easement constraints or archaeological resources • Topography may allow for screening from LOVR • Less prime farm land, no LCA contract • More removed from receptors and visibility from LOVR	• Less level than other sites; undulating topography. Site drains toward Warden lake, a tributary of Los Osos Creek • Los Osos fault may be present • Northerly portion of site (Warden lake area) is subject to flooding • Vehicle speeds on LOVR are high in this area, which would likely require channelization (east-bound left turn lane, west-bound deceleration lane) for vehicle access • Second furthest property east of service area

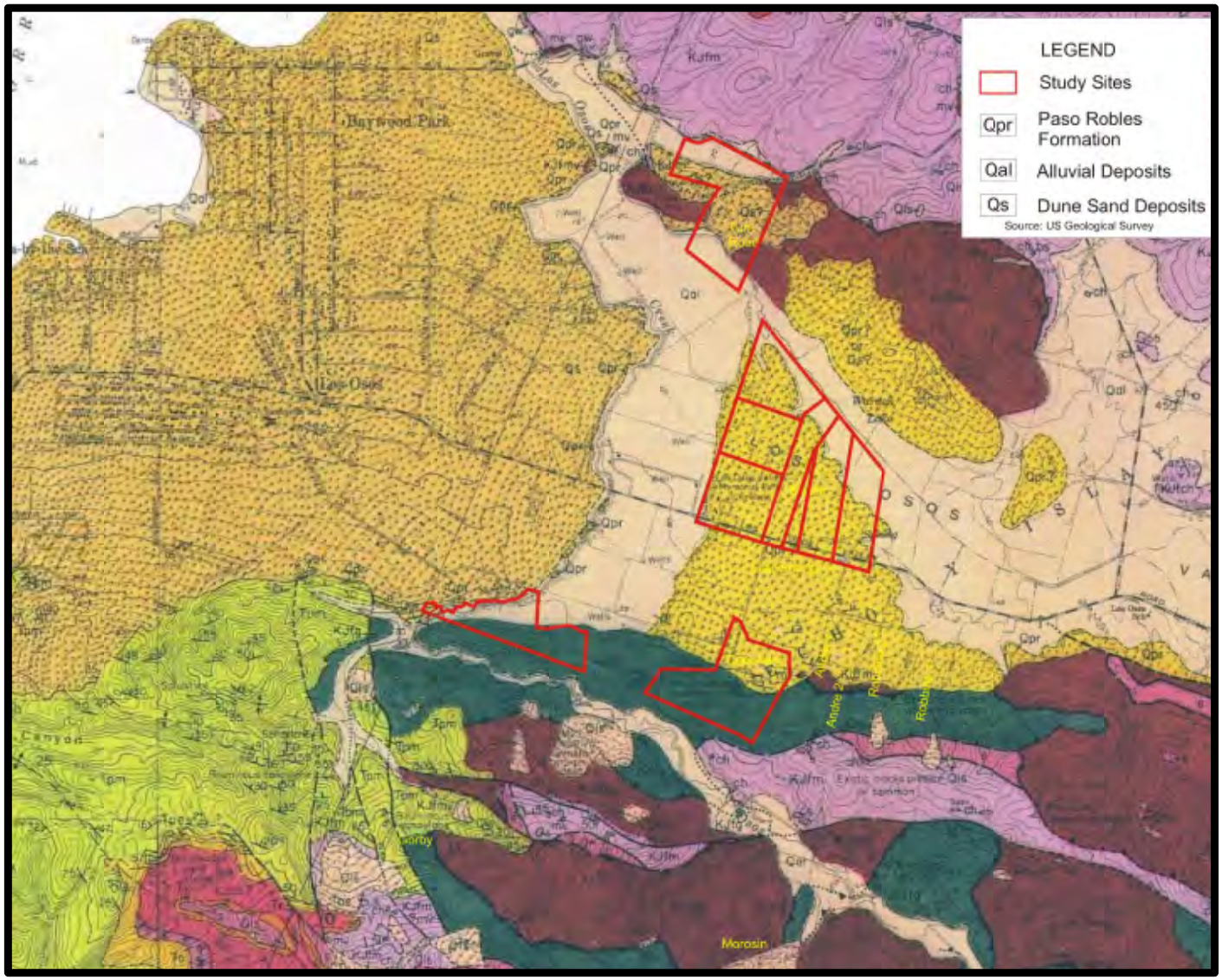

Figure No.5.4
Soil Types and Regional Geology
LOS OSOS WASTEWATER PROJECT DEVELOPMENT
San Luis Obispo County

Figure Provided By
Crawford, Multari & Clark Associates

carollo engineers

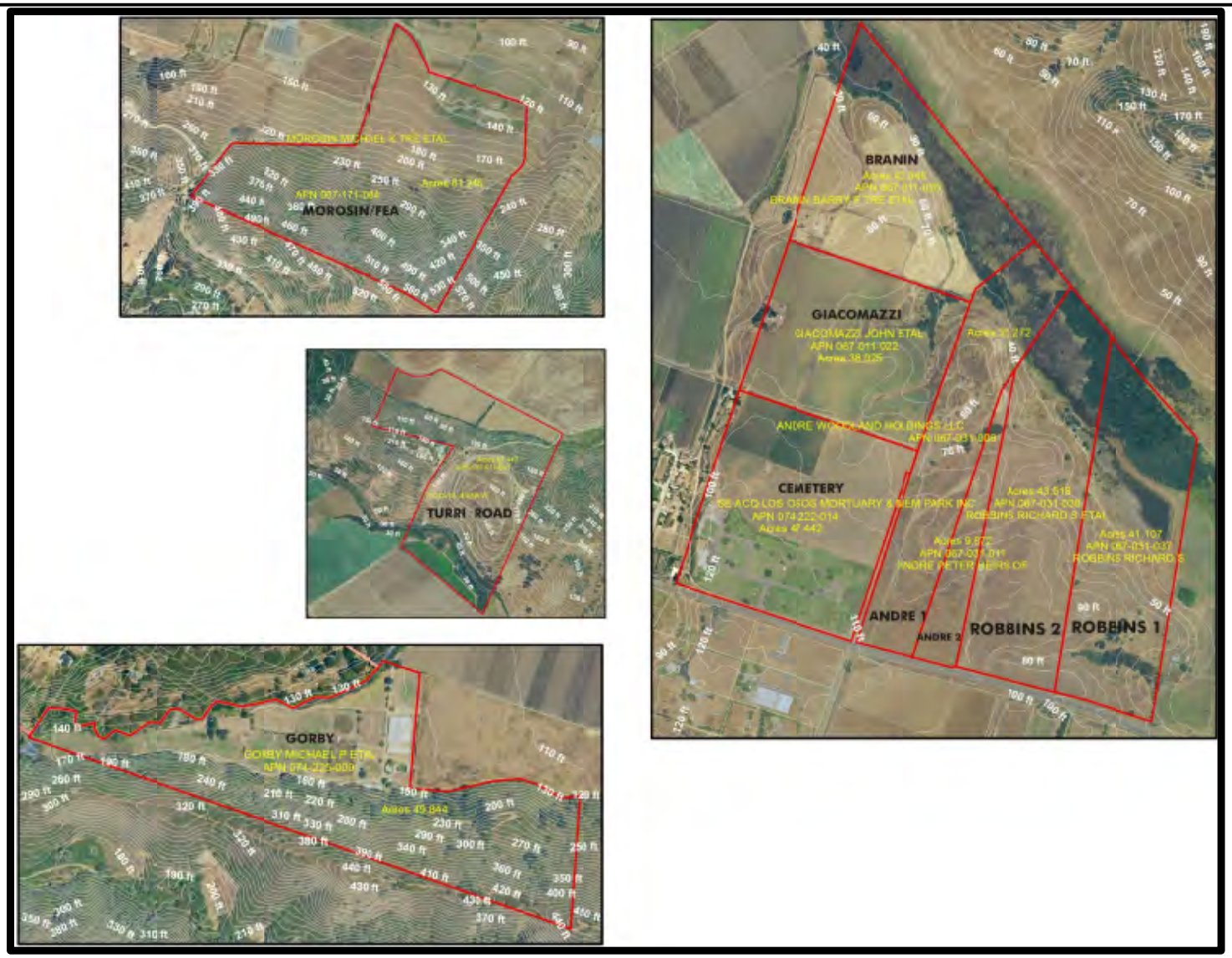

Figure No.5.5
Study Sites
LOS OSOS WASTEWATER PROJECT DEVELOPMENT
San Luis Obispo County

Figure Provided By
Crawford, Multari & Clark Associates

carollo engineers

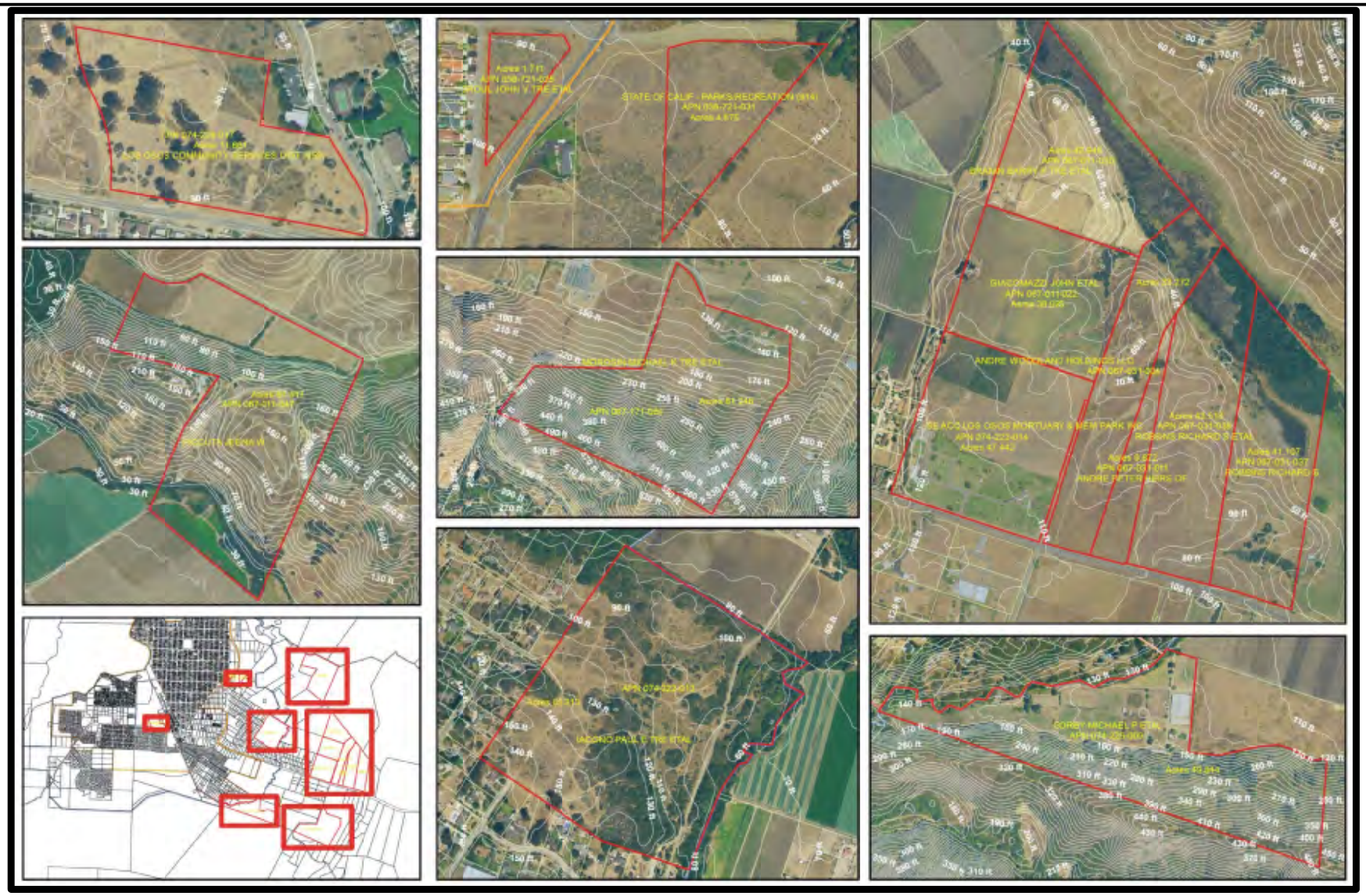

Figure No.5.6
Topography of Study Sites
LOS OSOS WASTEWATER PROJECT DEVELOPMENT
San Luis Obispo County

Figure Provided By
Crawford, Multari & Clark Associates

carollo engineers

COLLECTION SYSTEM ALTERNATIVES

6.1 PURPOSE

The purpose of this chapter is to summarize collection system alternatives for the Los Osos community wastewater project. Five types of collection systems are described as potential alternatives for this project. The Tri-W project included a conventional gravity system that serves as a basis of comparison for the other alternatives. The alternatives investigated include Septic Tank Effluent Pumping/Septic Tank Effluent Gravity (STEP/STEG) recommended in the Los Osos Wastewater Plan Update (Ripley Pacific Company, 2006), vacuum, low pressure, and a combined gravity/vacuum/low pressure system. Combining STEP/STEG with other collection systems is not investigated in depth due to odor and corrosion concerns with a combined system.

6.2 COLLECTION SYSTEM ALTERNATIVES

6.2.1 Conventional Gravity Collection System

A conventional gravity system was designed and permitted as part of the previous Tri-W Project. The system is a mostly passive central sewer system that uses gravity to move waste to the treatment facility. Based on topography, it is necessary to employ lift stations throughout the collection system. Because of the waste stream solids, larger diameter pipes are required to convey the waste to the in-street collection system, which also require larger diameter pipes.

6.2.2 Septic Tank Effluent Pumping/Septic Tank Effluent Gravity (STEP/STEG) Collection System

A STEP/STEG collection system retains the use of septic tanks. The septic tanks serve to settle solids and provide a primary level of treatment. The effluent from the tanks is conveyed to an in-street collection system via pumping (STEP system) or gravity (STEG system) through small diameter pipes. The in-street collection system also has relatively small diameter pipes because the waste stream is relatively free of solids. STEP/STEG wastewater lacks any dissolved oxygen (anaerobic). Wastewater collected by other systems includes a small amount of dissolved oxygen (aerobic).

6.2.3 Vacuum System Collection System

Vacuum sewer systems rely on gravity only to move wastewater from homes to a vacuum valve pit package and then use a pressure differential, instead of gravity, to move wastewater to a vacuum station and on to the treatment plant. Differential air pressure is used as the motive force to transport sewage. The main lines are under a vacuum of 16 to

20-inches mercury (-0.5 to –0.7 bar) created by vacuum pumps located at the vacuum station.

The vacuum system requires a normally closed vacuum/gravity interface valve at each entry point to seal the lines so that vacuum is maintained. The interface valves, located in a valve pit, open when a predetermined amount of sewage accumulates in the collecting sump. When the valve is opened, the pressure differential between atmospheric pressure and the vacuum in the mains provides the energy required to open the vacuum interface valves, evacuate the sump contents, and propel the sewage toward the vacuum station. The NWRI panel identified this system as an alternative that may be desirable in high groundwater areas.

6.2.4 Low Pressure Collection System

A low pressure collection system consists of individual sumps that collect waste and contain a grinder pump at each customer location. The low pressure system is also classified as a central sewer system. The ground waste is conveyed in smaller diameter pipes to an in-street pressure collection system that conveys the waste to the treatment facility. The in-street collection system also consists of smaller diameter pipes.

6.2.5 Combined Gravity, Vacuum, and Low Pressure Collection System

The combined system consists of gravity, vacuum, and low pressure collection systems depending on the localized topography throughout the system. The combined system allows for optimization of construction and operation and maintenance costs as compared to a dedicated system. The previous designed gravity system would serve as the starting point for this option. Vacuum and low pressure would be incorporated in locations where topography, groundwater, or other site-specific conditions dictate.

6.2.6 Summary of Collection System Alternatives

Table 6.1 is a summary of collection system alternatives including conventional gravity and STEP/STEG systems evaluated in previous reports. The table includes qualitative information on advantages/disadvantages and operations and maintenance issues.

Table 6.1 Collection System Alternatives
Los Osos Wastewater Project Development
San Luis Obispo County

Collection System	Advantages	Disadvantages	Operations & Maintenance Issues
Conventional Gravity	• Limited infrastructure and construction disturbance to individual properties • Reserve hydraulic capacity • Power required only at pump stations • Designed as part of Tri-W project • No proprietary technology	• Several lift stations required • Deep excavations for pipe installation • Requires larger pipes and manholes • Significant I/I	• Lift stations must be maintained • Reduced septage handling
STEP/STEG	• May utilizes existing septic systems if in acceptable condition (no off-site pump stations required) • Shallow excavation for pipe installation • Small pipes and no manholes • Minimal I/I	• Significant infrastructure and construction disturbance to individual properties (septic tanks are typically replaced because of I&I and previous studies have estimated 85 to 100% of tanks to be replaced) • Dedicated power supply required at individual properties • Limited hydraulic capacity	• Recurring disturbance to inspect and maintain septic tanks and pumps on individual properties (Blanket easement likely required) • Increased septage handling • Privatization option may reduce costs • RWQCB may impose monitoring system and additional maintenance requirements not accounted for in previous studies/estimates
Vacuum	• Limited infrastructure and construction disturbance to individual properties • Shallow excavation for pipe installation • Small pipes and no manholes • Minimal I/I • Power only required at the vacuum stations	• Only one manufacturer of vacuum systems (AIRVAC) • Collection chambers and several vacuum stations required • Limited hydraulic capacity	• Vacuum stations and interface valves must be maintained • Reduced septage handling
Low Pressure	• Minimized clogging because of grinder pumps • Shallow excavation for pipe installation • Small pipes and no manholes • Minimal I/I	• Significant infrastructure and construction disturbance to individual properties • Primary and back-up power supply required at individual properties • Limited hydraulic capacity • Lift stations may be required	• Recurring disturbance to maintain pumps and power source on individual properties (Blanket easement likely required) • Reduced septage handling • Privatization options to be investigated
Combined (Gravity/Vacuum/Low Pressure)	• Can optimize technology for localized conditions • Previously designed gravity system serves as design basis	• Similar to individual collection systems • Non-uniformity of design and construction	• Multiple techniques required to operate and maintain system

6.3 COLLECTION SYSTEM CASE STUDIES

Case studies of potential collection system alternatives to conventional gravity were assembled to document issues that need to be explored during detailed evaluation. The case studies for STEP/STEG, vacuum, and low pressure collection are summarized below.

6.3.1 STEP/STEG Collection System Case Studies

6.3.1.1 STEP Case Studies

Six municipal utilities that have installed STEP sewers were contacted to gain a better understanding of issues associated with design, construction, operation and maintenance of these systems. The utilities and a summary of their system are presented in Table 6.2.

Table 6.2 Utilities Interviewed for STEP Sewer Case Studies
Los Osos Wastewater Project Development
San Luis Obispo County

Utility	State	No. of STEP Connections	Average Lot Size	Retrofit of Septic System or New Development
Southwest Barry County Sewer Authority	MI	1,500	50 ft X 100 ft	Retrofit
Douglas County Natural Resources at Glide	OR	850	Varies greatly	Retrofit
Steven's County PUD District	WA	1,400	50 ft X 100 ft to several acres	Retrofit
Charlotte County Utility Authority	FL	5,000	80 ft x 125 ft	Retrofit
South Alabama Utilities	AL	400	15,000 sq ft	Retrofit
City of Olympia Public Works Department	WA	1,700	Variable, generally larger than 50 ft x 100 ft	New (addition to existing gravity system)

Except for the Charlotte County, Florida system, all of the STEP sewers were provided by Orenco Systems, Inc and have been operational for 30 years or less.

Reasons given for initially installing STEP sewers included low up-front capital costs as well as difficulties associated with the installation of conventional sewers such as high-relief terrain, residences located near lakes or canals and high groundwater.

With the exception of the City of Olympia, the communities served by STEP sewers are satisfied with their systems. For example, the Manager of Operations at the Southwest Barry County Sewer Authority called their system “low maintenance, user friendly and easy to trouble-shoot.” The Charlotte County Construction Manager also cited low inflow/infiltration as another benefit to the system. Charlotte County, Douglas County, Steven’s Creek and South Alabama Utilities are all expanding their systems.

In Olympia, however, odor and corrosion are significant issues where the STEP effluent connects to the gravity system. They have had to replace pipes and provide odor control systems at these interfaces. They are concerned because operations and maintenance are considerably more costly than their conventional sewers. Residents consider STEP a "second rate system" and are annoyed by the alarms, STEP space requirements, septic trucks and maintenance crews.

Only Douglas County and Steven’s County provided any information about their treatment facilities. In Douglas County, septic tank effluent is delivered to oxidation ditches, which are operated and maintained by Orenco Systems. They attribute their ability to maintain the small size of their treatment facilities to the use of the STEP system. Steven’s County’s treatment facilities include one recycled sand filter to drainfield, two aerated lagoons, and disposal by spray irrigation.

6.3.1.2 Construction

South Alabama Utilities and the City of Olympia installed STEP systems for new residences. The other agencies retrofitted existing developments with STEP sewers and had to replace most or all of the existing septic tanks, with the exception of Charlotte County. Charlotte County replaced approximately 30 percent of the existing tanks after inspecting them to determine whether they were still in serviceable condition. For tanks that were retained, there were two options for the retrofit. The first option was employed if there was 6 inches of cover above the tank. In these instances, a fiberglass pump tank was inserted into the septic tank from the top and connected to the pressure line discharge, and was then covered with 40-pound stone or tile slab. The second option consisted of the addition of a 200-gallon pump tank connected to the pressure discharge on the side of tank leading to the leach field. In Douglas County, the decanting and pumping compartment of the STEP connection was installed through the top of the septic tanks that were retained.

None of the utilities that were contacted reported the cost of performing a retrofit. South Alabama Utilities used open-cut construction for laying the sewer pipe, and the other utilities did not report any details about construction of the sewer system. Both Olympia and Southwest Barry County mentioned some trouble with the installation of septic tanks on the lots. At Southwest Barry County, cranes were used in some cases to lift the tanks over

houses, and plastic tanks were installed where workers had to manually lift tanks over obstacles at some homes.

6.3.1.3 Operations and Maintenance (O&M)

Homeowners are alerted to problems with the tank or pump by an audible and/or visible alarm. The homeowners are then responsible for contacting the utility. Routine pumping is used as an opportunity to inspect and replace faulty pumps, floats, or other parts. The utility owns the tank and pump, and for all of the utilities that reported on the subject, there was either a blanket easement or other agreement allowing the utility to access equipment on private property.

As previously mentioned, there are problems with corrosion and odors where Olympia's STEP system interfaces with their conventional gravity system. However, both Southwest Barry County and Douglas County also have sections where the STEP sewer feeds into a conventional sewer, and neither of those utilities report problems in these areas.

In general, the O&M for STEP sewers is significantly more costly and work-intensive than for conventional sewers. At the City of Olympia, one person on their field crew is dedicated to maintaining 1700 STEP systems while the remaining three personnel maintain 13,000 gravity connections.

Information about the pumping schedule and maintenance staff is presented in Table 6.3.

Table 6.3 Operations and Maintenance Requirements for STEP Sewers Los Osos Wastewater Project Development San Luis Obispo County

Utility	Pumping Frequency (years)	Instigates Pumping[1]	# Maintenance Personnel
Southwest Barry County Sewer Authority	5-6	Utility	Not reported
Douglas County Natural Resources at Glide	As required	Utility	1
Steven's County PUD District	2-15	Homeowner	2.5
Charlotte County Utility Authority	3-25	Varies[2]	Not reported
South Alabama Utilities	N/A[3]	Homeowner	Not reported
City of Olympia Public Works Department	5	Utility	1

Notes:

1. Paid for by utility in each case.
2. Depending on who becomes aware of the problem.
3. System is 4 years old; no tanks have been pumped.

6.3.2 Vacuum Collection System Case Studies

6.3.2.1 Vacuum Sewer Case Studies

Five municipal utilities that have installed AIRVAC, Inc. vacuum sewers were contacted to gain a better understanding of issues associated with design, construction, and operation and maintenance. The utilities and a summary of their vacuum sewer systems are presented in Table 6.4.

Table 6.4 Utilities Interviewed for Vacuum Sewer Case Studies
Los Osos Wastewater Project Development
San Luis Obispo County

Utility	State	No. of Connections	No. of Valve Pits	No. of Vacuum Stations	Retrofit of Septic System or New Development
City of Albuquerque Public Works Department	NM	6800	3000	12	Retrofit
Englewood Water District	FL	7500	2600	5	Retrofit
City of Ocean Shores	WA	10,000	5400	7	Retrofit
County of York Department of Environmental Services	VA	2600	1200	6	New
City of Whitehouse	TN	1300	650	18	Retrofit

In York County, vacuum sewers were installed for new construction. All of the other communities had previously relied on septic tanks for wastewater treatment. Except for Whitehouse, whose vacuum sewer system was installed beginning in 1983, all of these systems were installed in the mid-1990s. The four newer systems listed high groundwater as their reason for choosing an alternative sewer system. Englewood determined that vacuum sewers would be the least expensive option for both capital costs and operations and maintenance. Ocean Shores initially tried using grinder/pressure sewers and found that they required a substantial amount of maintenance. Whitehouse chose AIRVAC because it was inexpensive and they were able to secure funding from the EPA for vacuum sewer construction.

Since the quality of the wastewater is not changed by vacuum sewerage, there are no problems where the vacuum sewers interface with the conventional gravity sewers in any of

these communities. The wastewater treatment facilities are not impacted by this collection system either.

At Englewood, between five and seven houses are connected by gravity to each 55-gallon valve pit. Wastewater is pulled out of the pit when it reaches a level that activates a mechanical signal. Each valve pit has between two and five valves. Wastewater travels for up to a mile to one of five vacuum stations. From there, it is conveyed by pressure into a force main to the gravity system that conveys the sewage to the wastewater treatment plant. All of the piping is PVC. The other utilities did not provide this level of detail about their systems.

Englewood, Ocean Shores and the County of York are satisfied with their vacuum sewers. These three entities will use vacuum sewers for all their future expansion. At Englewood, the District Operations Manager likes that the vacuum sewer is a “closed system” where operations and maintenance staff need to have very little contact with the sewage. He feels that vacuum stations are preferable to lift stations for reasons that he did not enumerate. He also liked that that there are no electrical components at the individual connections, so the majority of the maintenance occurs at the pump stations, rather than at the houses. At Ocean Shores, the operations manager was very enthusiastic about their system, mainly due to its ease of troubleshooting and maintenance. He has worked with the AIRVAC system for over 11 years and calls it “the most forgiving of the alternative sewer systems. He also cited the lack of inflow/infiltration as a large benefit of vacuum sewers. The project engineer at York County said that AIRVAC has been a good company to work with.

Both Ocean Shores and York County use biofilters for odor control. Neither Englewood, Ocean Shores, nor York County has experienced any problems related to odor.

In Albuquerque, the vacuum system was neglected for approximately ten years after installation. There has been high employee turnover at the Public Works Department and much of the knowledge about the system and its maintenance has been lost. Over the past two years, the field operations supervisor has been re-learning the system, and has been attending to deferred maintenance and familiarizing the staff with the system. During the time that the system was neglected, its power costs rose significantly because it was no longer well sealed and the vacuum was compromised. They have also had odor problems at the vacuum stations. Albuquerque will not continue to expand its vacuum system since they can install conventional gravity sewers in the areas that are being developed.

In Whitehouse, where they have vacuum, low pressure and gravity connections, the Utilities Supervisor reported a general dissatisfaction with the amount of resources required for the operations and maintenance of their vacuum system. It can take up to half a day to locate a sticky valve, although valve replacement is simple once the source of the problem is found. The replacement parts are proprietary. Additionally, the power requirements for their vacuum sewer are proportionately higher than for their low pressure or gravity sewers. The Utilities Supervisor feels that the system is poorly designed for maintenance and is planning

on gradually converting all of the connections to low pressure, with which they have had better experience, and to gravity. Both Albuquerque and Ocean Shores report that they prefer the vacuum system to gravity sewers on the basis of cost, and to low pressure systems with respect to maintenance.

6.3.2.2 Construction

In Englewood, open cut installation of sewer pipe was used except in areas where it was not feasible. Existing septic tanks were crushed and filled in. Open cut installation was used in Ocean Shores, York County and Whitehouse. The field operations supervisor at Albuquerque did not work for the Utility when construction occurred and does not have any information about the system installation.

6.3.2.3 Operations and Maintenance (O&M)

At Ocean Shores, York County and Whitehouse, three, two and six maintenance personnel, respectively, are required for the upkeep of their vacuum systems. Neither Englewood nor Albuquerque was able to quantify the number of staff that is required to maintain their vacuum sewers, since in both cases the vacuum component is a small portion of a mixed system.

All of the utilities reported problems with sticky valves at valve pits, but no problems with the vacuum piping itself. Maintenance is performed at vacuum stations where workers do not have contact with the sewage.

The operations manager at Ocean Shores gave a great deal of detail about the maintenance of their vacuum sewers. Ocean Shores does their own maintenance and rarely contacts AIRVAC except to get spare parts. They check the integrity of their vacuum by monitoring their power consumption, but rapid drops in vacuum are signaled by an alarm. Generally, operators must respond to between zero and five or six incidents per month. Most of these incidents involve water getting into a valve controller and hanging the valve open. This type of failure does not cause backups and is generally fixed in under two hours. There have been three total system shutdowns, each of which was remedied in under an hour, and were all related to failures in the electrical system (two from system bugs and one from operator error). There have been a few instances of debris in the valve pits which may either block the pit or cause a vacuum leak by holding open the valve. This can be avoided by inspecting new pits for debris and educating local plumbers and contractors. The valves themselves seem to be fairly impervious to wear; only two of the several thousand valves in the system have had to be replaced for this reason.

6.3.3 Low Pressure Collection System Case Studies

6.3.3.1 Low Pressure Sewer Case Studies

Six municipal utilities that have installed low pressure sewers were contacted to gain a better understanding of issues associated with their design, construction, and operation and

maintenance. There are two companies that provide low pressure sewers: eOne Corporation and Hydromatic. The utilities and a summary of their low pressure sewer systems are presented in Table 6.5.

Table 6.5 Utilities Interviewed for Low Pressure Sewer Case Studies
Los Osos Wastewater Project Development
San Luis Obispo County

Utility	State	No. of Connections	Year Installed	Company	Retrofit of Septic System or New Development
City of Bloomingdale	GA	1000	1983-present	eOne	Retrofit
Holiday Shores Sanitary District	IL	1000	1991-present	eOne	New
Fairfield Glade Resort	TN	3000	1975-present	eOne	New
Horseshoe Bay Utility District	TX	3000	1973-present	Hydromatic and eOne	New
Hot Springs Village	AR	6000	1983-present	Hydromatic	New
City of Whitehouse	TN	2500	1983-2006	Hydromatic and eOne	Retrofit

Bloomingdale and Whitehouse had previously relied on septic tanks for wastewater treatment and selected low pressure sewers because of the reduced capital cost compared to conventional sewers. In the other four communities, low pressure sewers were installed for new construction because they were unable to install conventional sewers due to their proximity to lakes and to high-relief terrain.

Since the quality of the wastewater is not changed by low pressure sewerage, there are no problems where the low pressure sewers interface with the conventional gravity sewers in any of these communities. The wastewater treatment facilities are not impacted by this collection system either.

All of these communities are either somewhat satisfied or very satisfied with their low pressure sewer systems. They are all continuing to use low pressure sewers for at least

part of their new development. The wastewater manager at Hot Springs has experience with both gravity and STEP sewer systems and says that the low pressure sewer is the easiest to maintain of all these.

Both Fairfield Glade and Holiday Shores have pressure switches rather than float switches. The operations manager at Holiday Shores claims that float switches are unreliable and prone to getting clogged with grease.

These communities have a variety of arrangements regarding ownership of the equipment and financing maintenance. At Holiday Shores, Fairfield Glade and Horseshoe Bay, the homeowner pays for the system when the home is built and pays a monthly fee thereafter for its upkeep, but it is owned and operated by the utility, which has a blanket easement to access it for maintenance. At Hot Springs, the homeowner owns the system and pays for the power and service calls. At Bloomingdale, the homeowner owns the system but the City has responsibility for its maintenance, and has a blanket easement to access it. In Whitehouse, the city owns the system, and has an easement to the pump vault.

6.3.3.2 Construction

Open cut installation was used in all of these communities. At Bloomingdale, where they had previously been using septic tanks, the tanks were emptied and filled. At Whitehouse, the septic tanks were crushed in place.

6.3.3.3 Operations and Maintenance (O&M)

The number of maintenance personnel required for the communities' low pressure sewers is listed in Table 6.6.

Table 6.6 Maintenance Personnel Required for Low Pressure Sewers Los Osos Wastewater Project Development San Luis Obispo County

Utility	Number of Maintenance Personnel
City of Bloomingdale	2
Holiday Shores Sanitary District	4 (for all water/wastewater responsibilities)
Fairfield Glade Resort	4 (for all wastewater responsibilities)
Horseshoe Bay Utility District	2
Hot Springs Village	Not reported
City of Whitehouse	6

The utilities supervisor at Whitehouse was the only respondent who didn't describe the initiation of maintenance for their low pressure system connections. In each of the other communities, maintenance is initiated by service calls from homeowners in response to visible/audible alarms.

Unlike STEP/STEG and vacuum sewers, there does not appear to be any particular problem that accounts for the majority of service calls or maintenance needs for low pressure sewers. The wastewater manager at Hot Springs says that many of the problems they have with their Hydromatic system are electrical rather than physical. For the eOne systems, both the operations manager at Holiday Shores and the operations manager at Fairfield Glade reported that some powdered detergents could clog the pressure switches.

Of the two communities that have both eOne and Hydromatic systems, the operations manager at Horseshoe Bay prefers Hydromatic, and the utilities supervisor at Whitehouse prefers eOne. Each of them cites maintenance as the main reason for preferring one company's sewer system over the other.

The operations manager at Fairfield Glade reported very positive experiences with eOne Corporation and their support of system maintenance. The utilities manager at Bloomingdale is very enthusiastic about their eOne system because he says that it doesn't require any preventative maintenance, although the operations manager at Holiday Shores reported that his community does have to perform some preventative maintenance on their system.

6.4 SUMMARY AND RECOMMENDATIONS FOR FURTHER STUDY

6.4.1 Screening Approach

The collection system screening approach identified collection systems and presented summaries of interviews with agencies that currently employ various gravity collection system alternatives. This information was used to develop a list of potentially viable solutions and to eliminate alternatives that have fatal flaws or are equivalent alternatives.

6.4.2 Potentially Viable Alternatives for Detailed Evaluation

It is recommended that the STEP/STEG and combined gravity, vacuum, and low pressure collection systems be further evaluated during detailed evaluation.

Combining STEP/STEG with aerobic flows results in the formation and off-gassing of hydrogen sulfide, an odorous compound, and corrosion. Therefore, combining STEP/STEG with other collection systems is not recommended.

While conventional gravity collection is viable, a combined gravity, vacuum, and low pressure system allows optimization of technology based on localized conditions. Since a

conventional gravity system has already been designed as part of the Tri-W Project, this will serve as the base for optimization during detailed evaluation where use of vacuum and/or low pressure will be investigated to minimize costs and construction impacts. **Vacuum and low pressure systems offer no significant advantages to a combined system and should not be evaluated separately during the detailed evaluation process. Dedicated conventional gravity will be considered as part of the Tri-W Project, but offers no significant advantages to a combined system.**

6.4.3 Recommendations for Further Study

During the detailed evaluation process, several key issues need to be examined to fully evaluate the potentially viable collection systems. The issues may have a significant impact on costs, future flexibility, operations, and maintenance. Key issues include:

- Individual property construction costs and impacts.
- Operation and maintenance costs - including RWQCB monitoring and maintenance requirements for the distributed pumps and tanks.
- Individual property Operation and Maintenance requirements.
- Transmission main installation method and construction costs.
- Life cycle costs from “house to treatment plant.”
- Treatment plant cost variance due to influent wastewater quality (e.g., aeration, sludge management, etc).
- Easement requirements and costs.

SUMMARY AND RECOMMENDATIONS

7.1 PURPOSE

Potential components for viable alternatives are detailed in Chapter 2 through 6. The next step will be to examine combining the individual components into complete potentially viable project alternatives. This chapter summarizes the rough screening of components that will ultimately become part of potentially viable alternatives developed in the next phase of this alternatives analysis (refer to the project flow schematic in Chapter 1). This Chapter also summarizes key issues for the detailed analysis.

7.2 MATRIX OF POTENTIALLY VIABLE PROJECT COMPONENTS

As discussed in Chapter 1, the previous LOCSD project at the Tri-W site will be carried through the screening process for comparison purposes. As part of the Tri-W site alternative, the membrane bio-reactor process was considered a viable treatment alternative. However, it is viewed as only cost effective at the Tri-W Site. The Tri-W site itself passes the screening criteria of being permittable, constructable, and fundable and will therefore also remain on the table through the rough screening process. Table 7.1 shows the components of the Tri-W project.

Table 7.1 Tri-W Project Components
Los Osos Wastewater Project Development
San Luis Obispo County

Treatment Process	Reuse/Disposal Method	Treatment Facility Site	Solids Disposal Method	Collection System
Membrane Bio-Reactor (MBR)	Leach Fields with Harvest Wells	Tri-W	Hauling of Digested Biosolids	Dedicated Gravity System

This rough screening report was the first step in developing alternatives to the Tri-W Project. A matrix of the potentially viable project components is shown in Table 7.2. The matrix was developed based on each viable treatment alternative identified in Chapter 3, since the treatment plant site, solids disposal alternatives and disposal/reuse alternatives are dependent on the treatment technology employed. The table includes all of the viable components identified through the rough screening process. However, certain components are not feasible with each treatment technology and are indicated as such in Table 7.2. There are several reasons for incompatibility of components. For example, land disposal options that require low effluent nitrogen for protection of the groundwater cannot be paired with treatment alternatives that do not provide reliable nitrogen removal to low levels. Some types of treatment require land areas exceeding some sites' useable area. Components that are not feasible are "lined out" in Table 7.2.

Table 7.2 Matrix of Potentially Viable Project Components
Los Osos Wastewater Project Development
San Luis Obispo County

Potential Treatment Process	Potential Reuse/Disposal Alternatives	Potential Siting Alternatives	Potential Solids Disposal Alternatives	Potential Collection System Alternatives
Extended Aeration	• Leach Fields • Percolation • Spray Fields • Agricultural Reuse • Urban Reuse • Constructed Wetlands	• Cemetery • Giacomazzi • ~~Andre 2~~ • Morosin/FEA • Branin • Gorby (LOVE Farm) • Robbins 1 • Robbins 2	• Recycling of Digested/ Composted Class A Biosolids • Recycling of Composted Class A Biosolids • Hauling of Digested Class B Biosolids • Hauling of Composted Class B Biosolids • Hauling of Sub-Class B Dewatered Biosolids	• STEP/STEG • Gravity/ Vacuum/ Low Pressure Combination
Sequencing Batch Reactor (SBR)	• Leach Fields • Percolation • Spray Fields • Agricultural Reuse • Urban Reuse • Constructed Wetlands	• Cemetery • Giacomazzi • Andre 2 • Morosin/FEA • Branin • Gorby (LOVE Farm) • Robbins 1 • Robbins 2		
Oxidation Ditch	• Leach Fields • Percolation • Spray Fields • Agricultural Reuse • Urban Reuse • Constructed Wetlands	• Cemetery • Giacomazzi • ~~Andre 2~~ • Morosin/FEA • Branin • Gorby (LOVE Farm) • Robbins 1 • Robbins 2		
Biolac® Extended Aeration	• Leach Fields • Percolation • Spray Fields • Agricultural Reuse • Urban Reuse • Constructed Wetlands	• Cemetery • Giacomazzi • ~~Andre 2~~ • Morosin/FEA • Branin • Gorby (LOVE Farm) • Robbins 1 • Robbins 2		

Table 7.2 Matrix of Potentially Viable Project Components
Los Osos Wastewater Project Development
San Luis Obispo County

Potential Treatment Process	Potential Reuse/Disposal Alternatives	Potential Siting Alternatives	Potential Solids Disposal Alternatives	Potential Collection System Alternatives
Trickling Filter Solids Contact	• ~~Leach Fields~~ • ~~Percolation~~ • Spray Fields (?) • Agricultural Reuse(?) • Urban Reuse (?) • ~~Constructed Wetlands~~	• Cemetery • Giacomazzi • Andre 2 • Morosin/FEA • Branin • Gorby (LOVE Farm) • Robbins 1 • Robbins 2	• Recycling of Digested /Composted Class A Biosolids • Hauling of Digested Class B Biosolids	• STEP/STEG • Gravity/ Vacuum/ Low Pressure Combination
Partially Mixed Facultative Ponds	• ~~Leach Fields~~ • ~~Percolation~~ • Spray Fields (?) • Agricultural Reuse(?) • Urban Reuse (?) • ~~Constructed Wetlands~~	• Cemetery • Giacomazzi • ~~Andre 2~~ • Morosin/FEA • Branin • ~~Gorby (LOVE Farm)~~ • Robbins 1 • Robbins 2	• Mobile/ Temporary Facilities (as required)	

The Andre 2 site is an 8-acre triangular site off of Los Osos Valley Road. Due to the shape and size of this parcel, oxidation ditches, BIOLAC Extended Aeration and partially mixed facultative ponds are not viable treatment processes for the Andre 2 Site. Partially mixed facultative pond area requirements are also too great for the developed area of the Gorby Site (LOVE Farm). A significant portion of the site is prime agriculture and hillside natural habitat and therefore viewed as not developable for the treatment plant. As a result, the Andre 2 site will not be considered for further evaluation as a treatment plant site, however, it may be viable as a disposal site, e.g. a spray field.

Trickling filter and partially mixed facultative ponds do not reliably reduce effluent nitrogen to less than 7 mg/l. Therefore, these treatment alternatives are not compatible with the leach field, percolation and constructed wetland reuse/disposal alternatives which require low nitrogen into the groundwater. In addition, the other reuse/disposal alternatives may not be compatible with the higher nitrogen levels in the effluent from these treatment processes depending on the actual end use. The nitrogen levels may limit the ability to reuse or dispose of the effluent including the type of crop irrigated and the amount of percolation allowed in conjunction with a spray field. These reuse/disposal alternatives will have to be evaluated further during detailed investigations to confirm the potential viability of these treatment processes.

7.3 NEXT STEPS

7.3.1 Detailed Evaluation

The objective of this report was to perform a rough screening of alternatives for project components including those considered previously. The primary purpose of the rough screening was to develop a “short-list” of component alternatives and eliminate components that had fatal flaws or significantly problematic challenges that make permitting, funding and/or construction of the alternative unlikely.

The next steps (termed the detailed evaluation) are as follows:

1. Fine screening of components passing rough screening
2. Combine components into potentially viable project alternatives
3. Develop and evaluate potentially viable project alternatives
4. Prepare the viable project alternatives report

Fine screening will evaluate the engineering aspects of each alternative project component, such as design criteria, sizing of unit processes, reliability, ease of operation and maintenance, ease of obtaining permits, public acceptability, and environmental impacts. Preliminary layouts of the project components will also be prepared, including conceptual site plans and hydraulic profiles. Conceptual level site plans and cost estimates will be presented so that the Technical Advisory Committee can provide a pro/con evaluation for the Proposition 218 vote. The detailed analysis will also feed into the Assessment Engineering Report that will identify special project benefits for the basis of the Proposition 218 assessment.

The objective of the development and evaluation of potentially viable project alternatives will be to develop the project components that passed the rough screening process into projects. The potentially viable projects will then receive a final screening and a short-list of the final viable project alternatives will be developed. The viable project alternatives will include alternative project sites, collection system alternative configurations, treatment technologies and solids disposal methods, and reuse/disposal methods. The development of final viable project alternatives will be accomplished through 1) a report that is circulated to the Technical Advisory Committee for a pro/con evaluation and other agencies for review and comment, and 2) a staff report, which will be presented to the Board of Supervisors for approval prior to the Board’s direction to proceed with a Proposition 218 election.

7.3.2 Schedule and Cost Estimate Considerations

Project schedule and cost were considered indirectly in the rough screening analysis. The screening approach removed components from consideration that were equivalent alternatives and potentially impeded implementation from a regulatory/permitting and public

acceptance standpoint. The goal of the rough screening process was to eliminate those project components that had the greatest impact on project schedule and costs.

The long-term project schedule and cost issues that may impact project implementation will be outlined in the detailed evaluation phase. Project schedule variation between the potentially viable project alternatives will then be considered in the pro/con analysis conducted by the Technical Advisory Committee. To avoid further Cease and Desist Orders, the RWQCB has stated that the project must be constructed by 2011.

Life-cycle cost estimates will be prepared, including capital cost estimates for initial investment and repair/replacement, and annual operation and maintenance costs for the potentially viable alternatives. Costs will be developed to include estimates for additional permitting, water management, community enhancement or other general benefit costs in addition to the special benefit project requirements. Figure 7.1 shows a conceptual curve of the relationship of costs vs. an increasing inclusion of previously stated project goals. Development of cost curves will allow comparison of alternatives based on:

- Costs to develop a project to meet RWQCB requirements and form the basis of Special Benefits
- Costs to develop a permittable, fundable, and constructible project
- Costs to implement various community requirements and desires

Breakdown of the cost estimates will conform to the requirements of the assessment engineer to facilitate evaluation by the Technical Advisory Committee and County Staff.

7.3.3 Recommendations for Further Study

The detailed evaluation process is critical for the presentation of accurate and complete information needed by the Technical Advisory Committee, Assessment Engineer, and ultimately, Proposition 218 voters. During the detailed evaluation process, several key issues will be examined to fully evaluate the potentially viable treatment processes. Key issues are listed in each chapter and reproduced in Table 7.3. This is not an exhaustive list, but will be used as guidance for the detailed evaluation process.

Table 7.3 Representative Key Issues for Detailed Evaluation Los Osos Wastewater Project Development San Luis Obispo County	
Effluent Disposal / Reuse	• Site minimum capacity to accommodate the volume of disposal water anticipated. For purposes of this analysis, 'capacity' refers to land area, soil type, sub-surface geology, and the absence of biological resources or other physical features that would limit the discharge, storage and/or percolation of disposal water • Construction and operational impacts. Construction-related activities will involve the extension of disposal pipes from the treatment plant, the excavation of pipeline trenches and (in the case of wetlands or percolation ponds) grading/excavation operations that would be comparable on a given site • Groundwater management considerations and water balance • Regulatory requirements of the San Luis Obispo County General Plan/Local Coastal Program and Land Use Ordinance, as well as other State and federal laws relating to the protection of endangered species and archaeological resources • Specific biological and archaeological surveys, along with CPT and soil percolation tests
Treatment Technology	• Confirmation of nitrogen removal limits and control • Impact of nitrogen removal capabilities on reuse/disposal alternatives • Storage requirements, including acreage, for various reuse/disposal alternatives • Wet weather storage requirements • Additional processes required for production of Title 22 Disinfected Tertiary effluent • Impacts on solids treatment and disposal alternatives • Impact of collection system (influent water quality) on treatment process design including septage handling • Impact on disinfection and odor control requirements • General benefit alternative impacts including acreage requirements (e.g. filter requirements for Title 22 Disinfected Tertiary)
Solids Treatment and Disposal	• Confirmation of projected biosolids production • Impact and treatment technology on solids treatment requirements • Future flexibility and options • Impact on odor control requirements • Life-cycle costs • General benefit alternative impacts including acreage requirements

Table 7.3 Representative Key Issues for Detailed Evaluation Los Osos Wastewater Project Development San Luis Obispo County	
Treatment Facility Siting	• A complete title report • Biological assessment to identify the presence and extent of sensitive habitats (especially wetlands) and to determine the presence or absence of special status plant and animal species • Phase I archaeological assessment • Geotechnical assessment to determine the presence or absence of the Los Osos fault, any slope stability issues, depth to groundwater, liquefaction, and the expansiveness and percolation capacity of soils • Assessment of applicable regulatory requirements, and especially those relating to the protection of Environmentally Sensitive Habitat Areas (ESHA) • An assessment of potential drainage issues • Traffic/circulation issues and accessibility • An assessment of potential impacts to productive agricultural resources • An assessment of potential visual impacts • An assessment of potential impacts to sensitive receptors
Collection System	• Individual property construction costs and impacts • Operation and maintenance costs • Individual property Operation and Maintenance requirements • Transmission main installation method and construction costs • Life cycle costs from “house to treatment plant” • Treatment plant cost variance due to influent wastewater quality

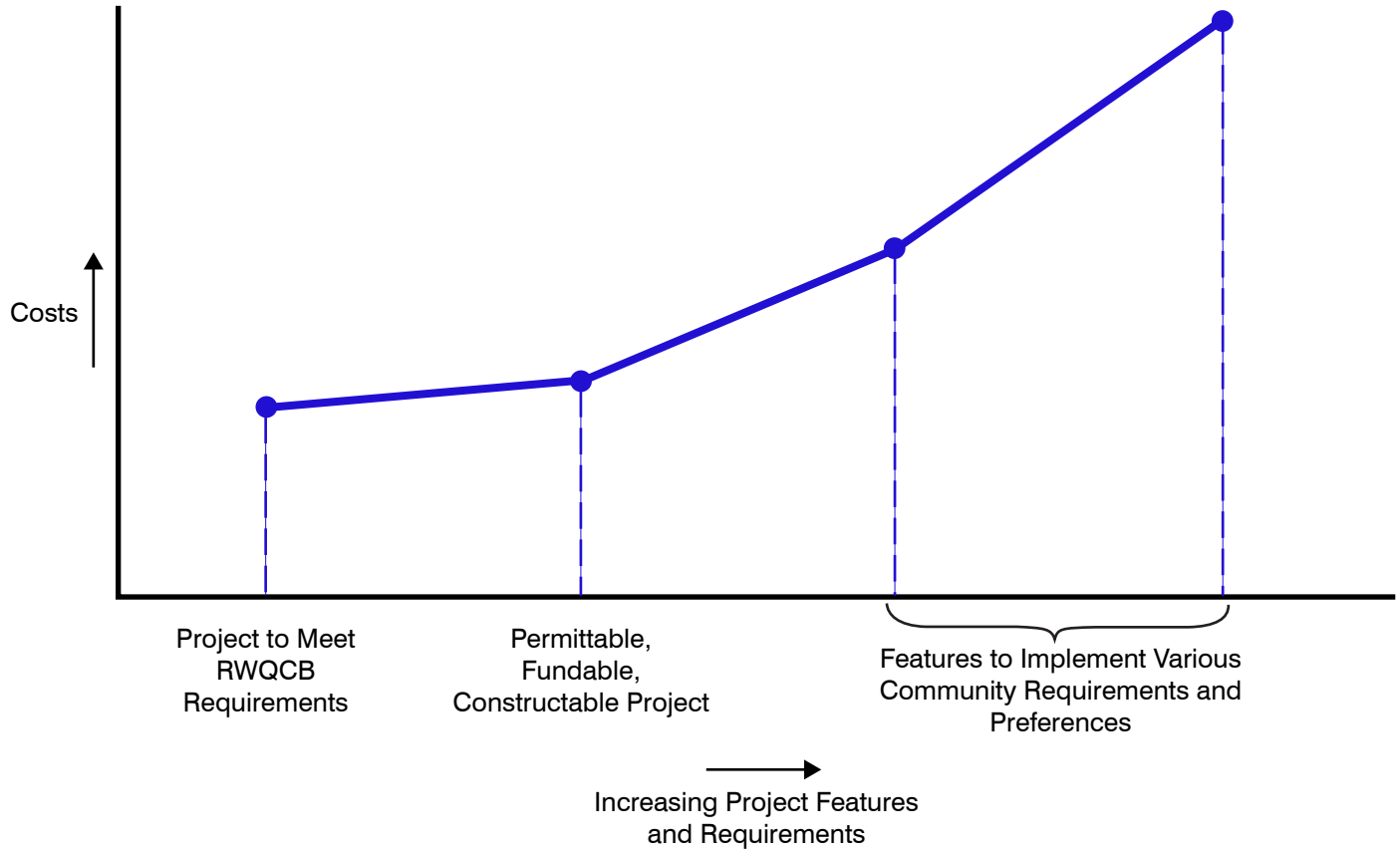

Figure 7.1
CONCEPTUAL VIABLE PROJECT ALTERNATIVE COST CURVES
LOS OSOS WASTEWATER PROJECT DEVELOPMENT
SAN LUIS OBISPO COUNTY

slo307g1-7630.ai