APPENDIX 3-6

Project 6: Goleta Sanitary District, Wastewater Treatment Plant Upgrade

- RWQCB Settlement Agreement
- Facilities Planning Study
- Native American Consultation Letter
- Value Engineering Report
- Fault Investigation Report
- Compaction Test Report
- Health Risk Assessment
- Mitigated Negative Declaration
- Monitoring and Reporting Program
- Construction Documents and Specifications
- Final Design Drawings (Contract Documents)
- APCD Authority to Construct Permit
- California Coastal Commission Coastal Development Permit
- Proposed Santa Barbara County IRWM Data Management System, Application for Prop 84 Planning Grant, Round 1, Santa Barbara County, IRWM Plan 2012, Task 4: Establish Data Management System, pp. 51, September 28, 2010

SETTLEMENT AGREEMENT

THIS SETTLEMENT AGREEMENT ("Agreement") is made by and between the CALIFORNIA REGIONAL WATER QUALITY CONTROL BOARD, CENTRAL COAST REGION (the "Regional Board"), and the GOLETA SANITARY DISTRICT (the "District"). The Regional Board and the District are collectively referred to herein as the "Parties," and each of them is singularly referred to herein as a "Party."

Recitals

A. Pursuant to the requirements of Clean Water Act ("CWA") section 402 (33 U.S.C. §1342) and Water Code sections 13000 et seq., the Regional Board or the United States Environmental Protection Agency (the "U.S. EPA") must prepare and adopt a National Pollutant Discharge Elimination System ("NPDES") permit for the District's wastewater discharge to the Pacific Ocean every five (5) years.

B. Although NPDES permits issued to publicly owned treatment works generally specify secondary treatment of wastewater (33 U.S.C. §1311(b)(1)(B)), Congress has specifically authorized waivers of secondary treatment requirements under CWA section 301(h) (33 U.S.C. §1311(h)). To qualify for a waiver, a discharge must satisfy the conditions of CWA Section 301(h), and applicable regulations. The District has been and continues to discharge its treated wastewater under a 301(h) permit (No. CA0048160) jointly issued by the U.S. EPA and the Regional Board on July 26, 1996. On January 23, 2001, the District applied to U.S. EPA and the Regional Board for another 301(h) permit with a flow limit of 9 mgd.

C. At its April 19, 2002 meeting, the Regional Board considered the renewal of the District's 301(h) permit. At the conclusion of that meeting, the Regional Board directed its staff to develop findings to support denying CWA section 401 certification and denying concurrence with the 301(h) permit.

D. At its July 12, 2002 meeting, the Regional Board adopted Resolution No. R3-2002-0077 denying CWA section 401 certification and denying concurrence with the 301(h) permit. The Resolution required the District to submit a modified NPDES permit application to the Regional Board by December 12, 2002.

E. The District petitioned the Regional Board's adoption of Resolution No. R3-2002-0077 to the State Water Resources Control Board (the "State Board") on August 7, 2002 (the "State

Board Petition"). At the same time, the District requested that the State Board stay the Regional Board's December 12, 2002 deadline for submitting a modified NPDES permit application while the State Board considered the State Board Petition. The State Board denied this stay request, but the Regional Board extended its own deadline to the date 45 days after the State Board issued a decision on the State Board Petition.

F. On October 15, 2003, the State Board adopted Order No. WQO 2003-0015, which stated that the deadline for final action upon the District's State Board Petition was October 17, 2003 and that, because the State Board anticipated taking final action on the matter after October 17, 2003 (the expiration of the regulatory timeframe set forth in 23 C.C.R. §2050.5), the State Board would review Regional Board Resolution No. R3-2002-0077 on its own motion. (Subdivision (a) of the Water Code section 13320 authorizes the State Board to review actions of a regional water quality control board on its own motion at any time.)

G. On December 4, 2003, the District submitted to the Regional Board and U.S. EPA an application for a 301(h) permit providing for a flow limit of 7.64 million gallons per day and a CWA section 401 Water Quality Certification Application. The District provided additional information on December 19, 2003. On December 30, 2003 the Regional Board denied 401 certification without prejudice.

H. On January 22, 2004, the State Board adopted a motion rescinding Order No. WQO 2003-0015. In a letter dated February 4, 2004, the State Board advised the District that: "In view of the SWRCB's action rescinding Order No. WQO 2003-0015, and the fact that the deadline for acting on GSD's petition has passed, GSD's petition is deemed to be denied by operation of law as of January 22, 2004, and Regional Board Resolution No. R3-2002-0077 remains in effect." In a footnote, the State Board noted that: "By letter dated October 13, 2003, Goleta asked the SWRCB to hold Goleta's petition to review the Regional Board resolution in abeyance. The State Board took no action upon the request to hold the petition in abeyance."

I. On February 18, 2004, the District filed a Petition for Writ of Mandate in Santa Barbara County Superior Court (the "Petition"), and on April 21, 2004, filed an amended writ petition (the "Amended Petition"). In order to effectively stay these proceedings to allow settlement discussions to proceed, the District has not requested preparation of the administrative record.

J. The Parties wish to avoid unnecessary litigation over the issues raised in the Amended Petition and have agreed to settle the Amended Petition as set forth in this Agreement.

K. Subject to the provisions of this Agreement regarding Regional Board discretion and New Evidence (defined below), this Agreement contemplates that the Regional Board will concur in or issue the First and Second 5-Year Permits (defined below) in order to effect the District's obligation to complete the upgrade of its treatment facility to full secondary treatment standards within a ten-year period. Pursuant to the May 1984 Memorandum of Understanding for Modified NPDES Permits Under Section 301(h) of the Clean Water Act Between the California State Water Resources Control Board and the U.S. Environmental Protection Agency, Region 9, the Regional Board issues such concurrence and Clean Water Act Section 401 certification by issuing final waste discharge requirements. U.S. EPA then issues a NPDES permit including the 301(h) waiver provisions. References in this Agreement to the Regional Board "issuing" a permit mean, as applicable, issuance by the Regional Board of waste discharge requirements that constitute Section 401 certification of and concurrence with a U.S. EPA NPDES permit that includes modifications under Section 301(h), or issuance by the Regional Board of a NPDES permit.

L. Without admitting anything, the Parties enter into this Agreement to resolve the pending Amended Petition and to avoid the expense and uncertainty of litigation.

Agreement

In consideration of the foregoing and the following, the Parties agree as follows:

A. STAY OF LAWSUIT.

In order to avoid unnecessary litigation over the issues raised in the Amended Petition and to pursue the settlement provided for in this Agreement and to allow for its implementation, the Parties desire to stay the Amended Petition, the preparation and lodging with the Superior Court of the administrative record, the requirement for the filing of pleadings, and the court's consideration of the Amended Petition (the "Stay"). To accomplish the Stay, the District hereby agrees not to request that the administrative record pertaining to the Amended Petition be prepared or lodged with the court unless and until the District recommences the pending litigation pursuant to the Amended Petition under Section C.1.d after this Agreement becomes null and void. If the Superior Court issues an order to show cause or takes other action, which would have the effect of terminating the Stay and/or requiring said pending litigation to be recommenced, the Parties will jointly seek a court order granting a Stay of the litigation. If the Superior Court denies the Stay,

then within ten (10) days of such denial, (i) the Parties shall enter into a stipulation providing that the District may refile the Amended Petition, but only if such refiling is in accordance with the terms of this Agreement set forth below, and (ii) the District shall then dismiss the Amended Petition as to all respondents without prejudice. Said stipulation shall provide that, to the extent that the Amended Petition is refiled in accordance with and subject to the terms of this Agreement, (i) the refiling of the Amended Petition is not barred by time related defenses such as statutes of limitation, laches, estoppel or waiver, (ii) neither Party is waiving any other claims or defenses in connection with the Amended Petition upon refiling, including but not limited to claims and/or defenses relating to mootness and exhaustion of administrative remedies, (iii) the Regional Board reserves all rights to move to dismiss or demur to or move for summary judgment on the Amended Petition or any other pleading on any ground not stated in clause (i), (iv) the District reserves all rights to oppose such motions or demurrers, and (v) the waiver of time-related defenses in clause (i) shall expire if the District does not refile the Amended Petition within 30 days after this Agreement becomes null and void pursuant to Section B.2.c.2(a) or (b) hereof. The intent of this paragraph is only to effectuate the terms of this Agreement regarding the timing of and requirements for the Stay of the Amended Petition. Any new or changed allegations or claims in the refiled Amended Petition that were not included in the Amended Petition on April 21, 2004 are not subject to this paragraph.

B. TERMS.

1. Conversion Schedule

The District shall undertake a program to install and operate equipment at its treatment plant capable of achieving, and achieve, secondary treatment requirements set forth in 40 C.F.R. Part 133, other than 40 C.F.R. section 133.105. The program must be designed to adequately address projected future wastewater flows as of the end of the Conversion Schedule. The District shall complete the planning, design, construction and operation of the facilities necessary to attain compliance with the secondary treatment requirements in accordance with the schedule set forth below (the "Conversion Schedule"). The ten-year upgrade period, commencing with the issuance of the First 5-Year Permit (defined below) and ending on the last date listed in the Conversion Schedule, is the "Conversion Period."

CONVERSION SCHEDULE

Tasks	Date of Completion*
A. Preliminary Activities:	
1. Submittal of Detailed Conversion Plan and Timeline to Owners of Capacity in District's Plant	1/1/05
2. Coordination of Conversion Concepts w/ Owners of Capacity in District's Plant (Education regarding participation in conversion)	6/30/05
3. Send Requests for Environmental and Consulting Engineering Proposals	12/31/05
4. Award of Environmental and Consulting Engineering Contracts	6/30/06
B. Facilities Planning:	
1. Complete Draft Facilities Plan	12/31/06
2. Complete Final Facilities Plan	6/30/08
C. Environmental Review and Permitting:	
1. Complete and Circulate Draft CEQA Document	6/30/08
2. Certify Final CEQA Document	1/31/09
3. Submit Applications for all Necessary Permits	1/31/09
4. Obtain all Necessary Permits	1/31/11
D. Financing:	
1. Complete Draft Plan for Project Design and Construction Financing	1/30/07
2. Complete Final Plan for Project Design and Construction Financing	3/31/08
3. Submit Proof that all Necessary Construction Financing has been Secured, Including Compliance with Proposition 218	12/31/10
E. Design and Construction:	
1. Initiate Design	6/30/08
2. 30% Design	12/31/08

3. 60% Design	11/30/09
4. 90% Design	3/31/10
5. 100% Design	9/30/10
6. Issue Notice to Proceed to Contractor	4/30/11
7. Construction Progress Reports	Quarterly (w/ self monitoring reports)
8. Complete Construction and Commence Debugging and Startup	4/30/14
9. Full Compliance w/ Secondary Requirements	11/1/14

---

* Any completion date falling on a Saturday, Sunday or State holiday shall be extended until the next business day. The District shall submit proof of completion of each task within 30 days after the due date for completion.

2. Secondary Treatment Limits and District's Conversion to Secondary.

a. First Five-Year Permit Cycle.

1. The Regional Board's Executive Officer shall recommend to the Regional Board that it (i) concur in the issuance of a five (5)-year 301(h) permit for the District (the "First 5-Year Permit"), and (ii) provide water quality certification of the First 5-Year Permit under Clean Water Act Section 401 (33 U.S.C. §1341) without changing the District's current requirements for biochemical oxygen demand ("BOD") or total suspended solids ("TSS"). It is not the intent of this Agreement to impose numeric or narrative requirements for other constituents (e.g., limits for bacteria) that would effectively require the District to upgrade to full-secondary treatment faster than provided under the Conversion Schedule. Therefore, unless there is new evidence that was not in the administrative record as of the date the Regional Board's Executive Officer signed this Agreement, the Executive Officer shall recommend that the First 5-Year Permit allow the District to continue with its current treatment process consistent with the provisions of its existing 301(h) permit, Order No. 96-21 (except as provided below with respect to Enhanced Treatment),

2. The BOD and TSS limits to be recommended by the Executive Officer for approval are as follows:

Constituent	Units	Monthly (30-day) Average	Maximum at any time
BOD5 (20°C)	mg/L	98	150
	lbs/day	6,240	9,560
Suspended Solids	mg/L	63	100
	lbs/day	4,010	6,370

3. The findings recommended for adoption by the Regional Board in connection with the First 5-Year Permit and the issuance of water quality certification shall reference the Settlement Agreement and shall incorporate the Conversion Schedule. The findings recommended for adoption by the Regional Board shall also state that:

(i) Subject to the provisions of the Settlement Agreement regarding Regional Board Discretion and New Evidence, the Settlement Agreement contemplates that the Regional Board will concur in or issue the First and Second 5-Year Permits (defined below) in order to effect the District's obligation to complete the upgrade of its treatment facility to full secondary treatment standards within a ten-year period,

(ii) Based on the administrative record, including population growth projections through 2014, known environmental and cumulative impacts of the District's existing wastewater treatment facilities, and evidence submitted by the District of the time needed for upgrading the plant, the Conversion Schedule is appropriate, and

(iii) At the end of the Conversion Period, once the District has converted to secondary treatment of effluent from the Plant, the Regional Board expects to issue an NPDES permit imposing effluent limitations based on secondary treatment as defined in 40 C.F.R. Part 133, or any more stringent requirements the Regional Board determines are necessary to comply with State or Federal law.

4. If the Regional Board adopts the Executive Officer's recommendation by concurring with the First 5-Year Permit and issuing water quality certification, the District shall commence the process for completing all modifications to its plant necessary to comply with

secondary treatment standards ("upgrade to secondary treatment") by the end of the Conversion Period, in accordance with the Conversion Schedule.

b. Second Five-Year Permit Cycle.

1. For the five (5) year period following the expiration of the First 5-Year Permit, the Regional Board's Executive Officer shall recommend to the Regional Board that it (i) concur in the issuance of a second five (5)-year 301(h) permit for the District (the "Second 5-Year Permit"), and (ii) provide water quality certification of the Second 5-Year Permit under Clean Water Act Section 401 (33 U.S.C. §1341) without changing the District's current requirements for BOD or TSS as provided under Section B.2.a.2 above. As stated above, it is not the intent of this Agreement to impose numeric or narrative requirements for other constituents (e.g., limits for bacteria) that would effectively require the District to upgrade to full-secondary treatment faster than the Conversion Schedule provides. Therefore, the Regional Board's Executive Officer shall recommend that the Second 5-Year Permit (i) allow the District to continue with its current treatment process consistent with the provisions of its existing 301(h) Permit Order No. 96-21 (except as provided below with respect to Enhanced Treatment), and (ii) incorporate findings that contain the Conversion Schedule providing for converting to secondary treatment no sooner than the end of the original ten (10)-year Conversion Period. Notwithstanding the foregoing, the Executive Officer is not required to recommend concurrence in or certification of the Second 5-Year Permit as a 301(h) permit if there is evidence not in the administrative record at the time the First 5-Year Permit is issued ("New Evidence") that (a) the plant cannot satisfy one or more of the applicable requirements for issuance of a 301(h) permit; (b) population growth is likely to cause the projected average dry weather flows through the plant to exceed 7.64 mgd prior to the end of the Conversion Period; or (c) a change in the law requires more stringent limits. If the Executive Officer does not make the recommendations described in this paragraph because there is New Evidence, the Executive Officer shall state in writing the reasons for not making the recommendation and clearly identify the New Evidence.

2. If the Regional Board determines at the time of its consideration of the District's Second 5-Year Permit that substantial evidence supports a finding that the Conversion Schedule is still appropriate, based on the record before the Regional Board, but that the required

findings cannot be made for the Regional Board to (i) concur in the issuance of the Second 5-Year Permit under CWA Section 301(h), or (ii) provide water quality certification for such 301(h) permit as set forth in section B.2.b.1 above, the Regional Board may instead issue as the "Second 5-Year Permit" an NPDES permit. In such case, the final effluent limits (i.e., secondary treatment requirements) and the Conversion Schedule shall be incorporated into the permit findings, and the interim limits set forth in Section B.2.b.1 shall be incorporated into the permit provisions if the Regional Board determines that interim limits are legally authorized under the Water Code and the Clean Water Act. Otherwise, the final effluent limits shall be included in the Second 5-Year Permit and the interim limits and Conversion Schedule will be placed in an order adopted in conformance with Water Code §13385(j)(3) at the time the Second 5-Year Permit is adopted.

3. Except as otherwise provided in Sections B.2.a and b, above, this Agreement does not address any effluent limits of the First 5-Year Permit and the Second 5-Year Permit. The Parties understand and agree that pursuant to Order Nos. WQO 2003-0009 and WQO 2003-0012, the State Board has determined that the removal of effluent limitations for which new monitoring data indicate that there is no reasonable potential to cause or contribute to a water quality standards violation does not violate the general antibacksliding rules under Clean Water Act section 402(o), and that removal of effluent limits for non-impairing pollutants (as defined in WQO 2003-0009) does not violate the general antibacksliding rules under Clean Water Act section 303(d)(4) if antidegradation requirements are satisfied.

c. Regional Board Discretion.

1. Nothing in this Agreement limits the discretion that the Regional Board would have absent this Agreement. The Parties understand that the Regional Board members must consider the evidence before them and exercise their authority consistent with applicable laws, the record before them, and the discretion vested in them by applicable laws. Any decision by the Regional Board not to issue the First 5-Year Permit or Second 5-Year Permit as provided above, or to issue a permit that includes more stringent requirements than those set forth in herein, i.e., more stringent BOD or TSS limits or a shorter Conversion Period (either explicitly or through the imposition of effluent limits or other requirements that require a shorter Conversion Period) shall not constitute a breach of this Agreement by the Regional Board. However, the issuance of or

concurrence with the First 5-Year Permit and, if applicable, the Second 5-Year Permit, and any necessary related water quality certification, as set forth herein, are conditions to the District's continuing obligations under this Agreement, except for the District's obligation to Stay the Amended Petition pursuant to Section A, above.

2. (a) If, based the administrative record, the Regional Board issues the First or Second 5-Year Permit or takes other action during the Conversion Period and, in connection therewith, includes more stringent requirements than those set forth herein, i.e., more stringent BOD or TSS limits or a shorter Conversion Period (either explicitly or through the imposition of effluent limits or other requirements that require a shorter Conversion Period), the District shall timely file a petition for review by the State Board pursuant to Water Code section 13320 challenging these more stringent requirements. If the State Board does not, within two hundred seventy (270) days of the date on which the State Board determines in writing that the petition is complete, either remand the matter to the Regional Board for inclusion of the requirements set forth herein, or concur in the 301(h) waiver and issue 401 certification of, or issue, on its own the First or Second 5-Year Permit that includes the requirements provided for herein, then, unless the Parties otherwise mutually agree in writing, (i) the District's obligations under this Agreement to upgrade to secondary treatment within the ten-year Conversion Period and its obligations under the Conversion Schedule shall terminate, and (ii) this Agreement shall become null and void.

(b) If the Regional Board issues the First or Second 5-Year Permit and, in connection therewith, takes action to impose BOD and TSS limits and a Conversion Schedule as set forth herein (and if the action does not require, either explicitly or through the imposition of effluent limits or other requirements, a shorter Conversion Schedule), the District agrees that it will not file a petition for review with the State Board pursuant to Water Code section 13320 challenging the BOD or TSS limits or the Conversion Schedule. If a petition for review is filed by a third party pursuant to Water Code section 13320 that challenges such BOD limits, TSS limits or the Conversion Schedule (or seeks to require, either explicitly or through the imposition of effluent limits or other requirements, a shorter Conversion Schedule), and if the State Board does not dismiss the petition, issue an order upholding the Regional Board's action, or allow the petition to be deemed denied by failing to make a formal disposition thereon within the time specified in 23 CCR §2050.5(b) (as extended by any own-motion review pursuant to 23 CCR §2050.5(c)) then,

unless the Parties otherwise mutually agree in writing, (i) the District's obligations under this Agreement to upgrade to secondary treatment and its obligations under the Conversion Schedule shall terminate, and (ii) this Agreement shall become null and void.

(c) If the Regional Board does not take final action on the First 5-Year Permit by December 3, 2005, or if the Regional Board does not take final action on the Second 5-Year Permit by November 30, 2010, then, unless the Parties otherwise mutually agree in writing, (i) the District's obligations under this Agreement to upgrade to secondary treatment within the ten-year Conversion Period and its obligations under the Conversion Schedule shall terminate, and (ii) this Agreement shall become null and void.

(d) Nothing in this Agreement relieves the District of the requirement to exhaust applicable administrative remedies. Notwithstanding the termination of this Agreement and the fact that this Agreement becomes null and void, (i) the District will be required to comply with all state and federal laws, including the Clean Water Act and the California Water Code, (ii) the District shall retain the right to bring an action relating to any failure of the Regional Board's Executive Officer to make the recommendations required under Sections B.2.a.1 or B.2.b.1, above, and (iii) certain provisions regarding fees and costs shall survive, as set forth in Section F.10. The District's sole remedy for any claimed failure of the Executive Officer to make a recommendation under Sections B.2.a.1 or B.2.b.1 shall be to seek specific performance. The parties waive any right to discovery in such action and the evidence shall be limited to documents in the Regional Board's files as of the date of the Executive Officer's challenged recommendation. The District hereby waives all of its rights, if any, to seek damages from the Regional Board or Executive Officer in the event the District claims a breach of the Executive Officer's agreement to make the recommendations required under Sections B.2.a.1 or B.2.b.1. Nothing herein shall operate as a waiver of any defenses the Executive Officer or Regional Board may assert in such an action. The parties acknowledge that the State Board may decline to review any petition filed pursuant to this Agreement.

3. It is not the intent of this Agreement to create a basis for the Regional Board to issue a subsequent permit that requires a shorter Conversion Schedule because it determines, upon consideration of the Second 5-Year Permit, that it may be possible for the District to complete the upgrade sooner. Any decision by the Regional Board, when considering the Second 5-Year Permit, to require a shorter Conversion Schedule for other reasons shall specify those reasons and

support those reasons with evidence in the record. Only after it has determined, based on substantial evidence in the record, that independent factors exist for requiring a shorter Conversion Period, may the Regional Board consider the time necessary to complete the conversion as one of the factors in establishing the shorter Conversion Schedule, time schedule, or other compliance schedule.

C. PERMIT RENEWAL AND STIPULATION TO DISMISS.

1. Required Actions

a. If the Regional Board concurs in the issuance of the First 5-Year Permit and issues water quality certification consistent with the terms of Section B of this Agreement, and if no petition is filed with the State Board by a third party under California Water Code Section 13320 challenging the Regional Board's 301(h) concurrence, 401 water quality certification, TSS or BOD effluent limits or the findings specified by this Agreement (collectively referred to in this Section C.1 as "301(h) Waiver"), then the District shall dismiss with prejudice its Amended Petition in its entirety against both the Regional Board and the State Board within ten (10) days following the effective date of the First 5-Year Permit. If a petition challenging the 301(h) Waiver is filed by a third party with the State Board under California Water Code Section 13320, then the District shall dismiss with prejudice its Amended Petition in its entirety against both the Regional Board and the State Board within ten (10) days following the date on which the State Board dismisses the petition, fails to act on the petition within the time specified in 23 CCR §2050.5(b) (as extended by any own-motion review pursuant to 23 CCR §2050.5(c)), or issues an order upholding the 301(h) Waiver.

b. If the Regional Board issues the First 5-Year Permit as provided above, the District covenants not to petition to the State Board or otherwise appeal the 301(h) Waiver provisions of the First 5-Year Permit, so long as said Permit remains in effect and unchanged. However, the District reserves the right to petition to the State Board or otherwise appeal the First 5-Year Permit if any change(s) are made to the 301(h) Waiver or Conversion Schedule provisions of said Permit by the Regional Board or State Board.

c. The District reserves the right to challenge all other provisions of the First 5-Year Permit besides the Permit's BOD, TSS or Conversion Schedule requirements, including, but not limited to any new requirements for collection system maintenance, any new or

more stringent requirement than the requirements contained in Order No. 96-21, and effluent limits for constituents not demonstrated to have reasonable potential to cause or contribute to a violation of water quality standards. Any such challenge shall be commenced by raising the issue(s) before the Regional Board and then filing a petition to the State Board under Water Code Section 13320. A challenge to the Regional Board's or State Board's action under this paragraph shall not relieve the District of its obligation to dismiss the Amended Petition if required under Section C.1.a.

d. If this Agreement becomes null and void pursuant to Section B.2.c.2(a) or (b) above (Regional Board Discretion) with respect to the First 5-Year Permit, the District has indicated that it might either file a new lawsuit and seek to consolidate the new lawsuit with the Amended Petition, or continue the pending litigation pursuant to the Amended Petition. If the District files a new lawsuit alleging that a shorter Conversion Schedule is required, the District shall have the burden of proving that a requirement imposed by the Regional Board or State Board expressly or effectively requires a shorter Conversion Schedule. Before filing a new lawsuit related to the First or Second 5-Year Permit, the District agrees that it shall first exhaust all applicable administrative remedies (except for a lawsuit to stay the Regional Board action should the State Board deny such a stay request pursuant to California Water Code Section 13320(e)). If the District continues the Amended Petition, the District agrees that it shall first seek to amend the Amended Petition to incorporate the subsequent actions of the Regional Board and any State Board order relating to the Regional Board's action. Notwithstanding the foregoing, both the Regional Board and the State Board contend that all claims set forth in the Amended Petition will become moot no later than the date on which the First 5-Year Permit is issued and that the District cannot cure this by amending the Amended Petition to incorporate subsequent actions. The District does not agree with this contention. The Regional Board explicitly reserves that defense and any other claim of mootness, and the District explicitly reserves all of its defenses and claims with respect to any mootness arguments. In addition, the Regional Board and State Board contend that the District will have failed to exhaust its administrative remedies if it attempts to amend the Amended Petition to add any new claims or facts prior to raising the issue(s) before the Regional Board and then filing a petition to the State Board. The District does not agree with this contention. Nothing in this Agreement shall prejudice the State Board's ability to assert the same defenses. These reservations do not limit any other defenses of either of the Parties or the State Board.

e. If the Regional Board issues the Second 5-Year Permit as provided in Section B.2.b.1 or B.2.b.2 above, the District covenants not to petition to the State Board or otherwise appeal the Second 5-Year Permit's BOD, TSS or Conversion Schedule requirements, so long as said Permit remains in effect and unchanged. However, the District reserves the right to petition to the State Board or otherwise appeal the Second 5-Year Permit if any change(s) are made to said Permit or if the Conversion Period or Conversion Schedule are modified by the Regional Board or State Board.

f. The District reserves the right to challenge any other provisions of the Second 5-Year Permit besides the Permit's BOD, TSS or Conversion Schedule requirements, including, but not limited to any new requirements for collection system maintenance, any new or more stringent requirements than the requirements of the First 5-Year Permit, and effluent limits for constituents not demonstrated to have reasonable potential to cause or contribute to a violation of water quality standards, except as otherwise provided in the Ocean Plan. Any such challenge shall be commenced by raising the issue(s) before the Regional Board and then filing a petition to the State Board under Water Code Section 13320.

g. A challenge by the District or any other person of any provisions of the First 5-Year Permit or the Second 5-Year Permit that do not relate to the 301(h) Waiver or the Conversion Schedule shall not relieve the District of any obligation to comply with the Conversion Schedule and shall not toll any due date in the Conversion Schedule.

h. Except as otherwise provided in this Agreement, the District reserves the right to (i) pursue a future administrative or judicial challenge to the underlying water quality objectives, both numeric and narrative, as applied in future permits; (ii) challenge future revisions to any permit other than the First 5-Year Permit or the Second 5-Year Permit, without limitation, on all legal theories raised in the District's Amended Petition, and (iii) challenge any new permit or amendment thereto should there be a change in law that renders, in the District's opinion, any provision of the permit, as amended, inconsistent with the Clean Water Act or the Porter-Cologne Water Quality Control Act.

D. REQUIRED ACTIONS DURING CONVERSION PERIOD.

1. Enhanced Treatment.

a. If, during the Conversion Period, the District's effluent monthly (30-day) average mass emissions for total suspended solids (TSS) or biochemical oxygen demand (BOD) measured over the three-month period of June, July, and August of each year exceed eighty-five percent (85%) of the mass emissions limit set forth in the District's current 301(h) Permit, the District will enhance its treatment process by the use of polymers or other available technologies of equal or lesser cost (taking into account capital, operations and maintenance costs) and equal or better effectiveness ("Enhanced Treatment") in an effort to reduce mass emissions to eighty-five percent (85%) of the Permit limit.

b. Mass emissions for TSS and BOD will be re-evaluated in June of each year following the commencement of Enhanced Treatment to determine if emissions continue to exceed the Enhanced Treatment trigger of eighty-five percent (85%) without Enhanced Treatment. If the monthly (30-day) average mass emissions for TSS or BOD in June exceed ninety (90%), Enhanced Treatment will continue until tested again in June of the following year. If the monthly (30-day) average mass emissions for TSS or BOD in June are greater than eighty-five percent (85%) but less than ninety (90%), testing will continue through July and August to determine whether the three month monthly (30-day) average mass emissions for TSS or BOD exceed eighty-five percent (85%) of the Permit limit. If the monthly (30-day) average mass emissions for TSS or BOD for the three-month period of June, July, and August do not exceed the eighty-five percent (85%) Enhanced Treatment trigger, Enhanced Treatment may be discontinued until the Enhanced Treatment trigger is exceeded again in the future, as determined by subsequent three-month results during June, July, and August.

c. If the use of Enhanced Treatment fails to achieve mass emissions at or below the Enhanced Treatment triggers for any six (6) consecutive monthly periods, the District shall investigate and apply, with the approval of the Regional Board's Executive Officer, other technologies of equal or lesser cost (taking into account capital, operations and maintenance costs) and equal or better effectiveness if any such technologies are readily available and are capable of achieving at least eighty-five percent (85%) of the permitted mass emissions limits.

d. The Enhanced Treatment triggers set forth above are not effluent limitations, and, if exceeded, will not be considered a violation of the District's NPDES permit,

waste discharge requirements or water quality certification and will not subject the District to civil liabilities, fines, penalties or other enforcement action. If the District exceeds an Enhanced Treatment trigger and is therefore required to commence or continue Enhanced Treatment, the District will not be considered to have committed a violation of the District's NPDES permit, waste discharge requirements, or water quality certification, and will not be subject to civil liabilities, fines, penalties, or other enforcement action if Enhanced Treatment fails to bring effluent mass emissions for TSS or BOD, as measured above, below eighty-five percent (85%) of the mass emissions limit set forth in the District's current 301(h) permit.

e. The Enhanced Treatment requirements shall not be stated as NPDES permit conditions that could give rise to administrative civil liability, but shall be incorporated into the findings adopted as part of any 301(h) or NPDES permit issued to the District during the Conversion Period.

2. Force Majeure

a. A "force majeure event" is any event beyond the reasonable control of the District, its contractors, or any entity controlled by the District that delays or prevents the performance of any obligation under this Agreement. Force majeure events include, without limitation, (i) fire, strike, war, insurrection, terrorism, natural disaster, civil or military authority, civil disturbance; and (ii) to the extent they are beyond the District's reasonable control, government restriction on or prohibition of the task(s) set forth in the Compliance Schedule, lawsuits, court orders, injunctions, delays by other agencies with approval authority relating to or permitting of the conversion of the District's treatment facilities to secondary treatment, and site conditions discovered during construction if the District exercised reasonable diligence, but did not foresee such site condition prior to the commencement of construction. If a force majeure event occurs, the District shall undertake all reasonable measures to prevent or minimize the delay resulting from the event.

b. If any event occurs that the District believes is a force majeure event, the District shall notify the Regional Board by telephone as soon as reasonably possible. The District shall endeavor to notify the Regional Board in writing within fifteen (15) calendar days of the date on which the District first knew of the event, and shall provide such written notice within fifteen (15) calendar days after the date on which the District first knew the event would cause, or

be likely to cause, a delay. The District shall provide the written notice in accordance with Section F.7. The notice shall describe in reasonable detail the anticipated length of time the delay may persist, the cause or causes of the delay, the measures, if any, taken or to be taken by the District to prevent or minimize the delay as well as to prevent future delays, and the timetable by which those measures will be implemented.

c. If a delay has been caused by a force majeure event, the time for performance of the affected requirement(s) shall be extended for a period not to exceed the actual delay in performance resulting from such circumstance. In addition, stipulated penalties shall not be due for said delay. The Executive Officer shall notify the District of the agreement or disagreement with the District's claim of a delay or impediment to performance within seven (7) calendar days of receipt of a written notice that complies with Section D.2.b, above. If the Executive Officer does not so agree, or does not notify the District of its decision within seven (7) calendar days after receiving notice (in which case the Executive Officer shall be deemed to have disagreed), such decision (or deemed decision) by the Executive Officer shall not constitute final agency action and the dispute will be resolved administratively or judicially pursuant to Section E. In any such dispute, the District bears the burden of proving, by a preponderance of the evidence, that each claimed force majeure event is a force majeure event; that the District gave the notice required by this Section; that the force majeure event caused the delay that the District claims was attributable to that event; and that the District undertook all reasonable measures to prevent or minimize any delay caused by the event.

d. Unanticipated or increased costs or expenses associated with the implementation of this Settlement Agreement or changed financial circumstances shall not constitute a force majeure event hereunder.

e. An extension of one compliance date under the Compliance Schedule based on a particular incident may, but shall not necessarily, result in an extension of a subsequent compliance date or dates.

f. Where the Regional Board agrees to an extension of time, the appropriate modification(s) shall be made to the Conversion Schedule in accordance with Section F.5, below.

g. If the Regional Board issues the First or Second 5-Year Permit or takes other action during the Conversion Period and, in connection therewith, includes more

stringent requirements than those set forth herein, i.e., more stringent BOD or TSS limits or a shorter Conversion Period (either explicitly or through the imposition of effluent limits or other requirements that require a shorter Conversion Period) and, as required by Section B.2.c.2(a), the District files a timely petition for review with the State Board, a force majeure event shall be deemed to be occurring until such time as the District has been issued a permit that includes the requirements provided for herein. If the Regional Board does not act on the District's First 5-Year Permit by December 3, 2004, a force majeure event shall be deemed to be occurring from December 4, 2004 until such time as the District has been issued the First 5-Year Permit (unless prior to such permit issuance this Agreement becomes null and void). If the Regional Board does not act on the District's Second 5-Year Permit by March 31, 2010, a force majeure event shall be deemed to be occurring from April 1, 2010 until such time as the District has been issued a Second 5-Year Permit (unless prior to such permit issuance this Agreement becomes null and void).

h. If the Regional Board concurs in the 301(h) waiver and issues 401 certification of the First 5-Year Permit and, in connection therewith, includes BOD and TSS limits and a Conversion Schedule as set forth herein (and if the action does not require, either explicitly or through the imposition of effluent limits or other requirements, a shorter Conversion Schedule), and a petition for review is filed by a third party pursuant to Water Code section 13320, which challenges such BOD limits, TSS limits or the Conversion Schedule (or which seeks to require, either explicitly or through the imposition of effluent limits or other requirements, a shorter Conversion Schedule), a force majeure event shall be deemed to be occurring commencing on the date for the District to Send Requests for Environmental and Consulting Engineering Proposals (Task A.3) under the Conversion Schedule (as said date may be revised by force majeure events or by the agreement of the Parties) and continuing until such time as the State Board dismisses the petition without review (explicitly or by operation of law pursuant to 23 C.C.R. §2050.5) or issues an order upholding the BOD and TSS limits and the Conversion Schedule approved by the Regional in connection with the First 5-Year Permit.

i. If the Regional Board issues the Second 5-Year Permit as provided in Section B.2.b.1 or B.2.b.2 and, in connection therewith, includes BOD and TSS limits and a Conversion Schedule as set forth herein (and if the action does not require, either explicitly or through the imposition of effluent limits or other requirements, a shorter Conversion Schedule), and a petition for review is filed by a third party pursuant to Water Code section 13320, which

challenges such BOD limits, TSS limits or the Conversion Schedule (or which seeks to require, either explicitly or through the imposition of effluent limits or other requirements, a shorter Conversion Schedule), a force majeure event shall be deemed to be occurring commencing on the date for the District to complete 100% Design (Task E.5) under the Conversion Schedule (as said date may be revised by force majeure events or by the agreement of the Parties) and continuing until such time as the State Board dismisses the petition without review (explicitly or by operation of law pursuant to 23 C.C.R. §2050.5) or issues an order upholding the BOD and TSS limits and the Conversion Schedule approved by the Regional in connection with the Second 5-Year Permit.

j. The Parties agree not to request abeyance, and to oppose any request for abeyance, of a third party petition described in Sections D.2.h or i.

E. ENFORCEMENT

1. Except for force majeure events as provided above, and except as otherwise agreed by the Parties, if the District fails to complete a required action by the date set forth in the Conversion Schedule, stipulated penalties shall accrue as set forth below. Stipulated penalties shall accrue only with respect to one task on the Conversion Schedule at a time. In other words, if the District is behind schedule with respect to more than one required task, stipulated penalties shall accrue only for the most recent task.

a. Stipulated penalties shall be $200/day for all tasks that are to be completed prior to the issuance of the Second 5-Year Permit. The District shall pay all such accrued stipulated penalties, together with interest at the rate of five percent (5%) per annum, within thirty (30) days following the date on which the Second 5-Year Permit becomes final. If the District is current (i.e. has "caught up") by the date on which the Second 5-Year Permit becomes final, or if the Second 5-Year Permit is denied by the Regional Board or by the State Board on petition, all accrued stipulated penalties and interest thereon shall be cancelled and forgiven. The Second 5-Year Permit "becomes final" for purposes of this paragraph 30 days after the Regional Board issues the Second 5-Year Permit as provided in Section B.2.b.1 or B.2.b.2, if no petition challenging the BOD or TSS limits or Conversion Schedule is filed; or on the date the State Board resolves any petition challenging the BOD or TSS limits or Conversion Schedule by a dismissal (explicitly or by operation of law) or order having the effect of upholding or issuing a Second 5-Year Permit.

b. Stipulated penalties shall be $200/day for all tasks that are to be completed after the issuance of the Second 5-Year Permit and prior to the date on which the District is to achieve full compliance with secondary treatment requirements. The District shall pay all such accrued stipulated penalties, together with interest at the rate of five percent (5%) per annum, within thirty (30) days following the date on which the District is to achieve full compliance with secondary treatment requirements. If the District is current (i.e. has "caught up") by the due date for issuing a Notice to Proceed, all stipulated penalties and interest that have accrued after the issuance of the Second 5-year Permit, but prior to the due date for issuing a Notice to Proceed, shall be cancelled and forgiven.

c. Stipulated penalties shall be $500/day for the first 180 days if the District fails to achieve full compliance with secondary treatment requirements by the date specified in the Conversion Schedule. For the next 185 days following the initial 180 days, stipulated penalties shall be $1,000/day until the District achieves full compliance with secondary treatment requirements. After 365 days, stipulated penalties shall be $2,000/day until the District achieves full compliance with secondary treatment requirements. Stipulated penalties under this paragraph shall be paid by the District quarterly, commencing on the first day of the next calendar quarter that is at least thirty (30) days following the date on which the stipulated penalty is incurred.

2. Except for force majeure events as provided above, and except as otherwise agreed by the Parties, if the District fails to undertake an Enhanced Treatment activity as required herein, the District shall pay stipulated penalties in the amount of $200/day until the Enhanced Treatment activity has been undertaken. Stipulated penalties under this paragraph shall be paid by the District quarterly, commencing on the first day of the next calendar quarter that is at least thirty (30) days following the date on which the stipulated penalty is incurred and shall be in addition to and separate from any stipulated penalties payable under Section E.1, above.

3. In addition to or in lieu of seeking stipulated penalties, the Regional Board may seek judicial enforcement, including specific performance, of this Agreement, including without limitation the tasks and due dates set forth in the Conversion Schedule or the Enhanced Treatment requirements.

4. If the Executive Officer does not agree that a delay in the District's performance was caused by a force majeure event as defined in Section D.2 and the District does not stipulate in writing to the amount of penalties due after missing a milestone under the Conversion Schedule, the Regional Board may also impose stipulated penalties by issuing an administrative civil liability complaint, pursuant to Water Code Sections 13323-13326 and 13328. The Regional Board may hold administrative civil liability proceedings at any time, but any administrative civil liability order shall include the applicable payment due date and conditions of cancellation and forgiveness set forth in Sections E.1.a and E.1.b. The District may, but shall not be required to, waive the right to a hearing. If the District does not waive the right to a hearing, the District agrees not to challenge the daily amount of the stipulated penalties as set forth in this Agreement. The issues for hearing may include, without limitation, whether the District undertook or completed the required task or activity by the completion date(s) in question, the number of days or months for which stipulated penalties apply, and whether the delay, if any, was caused by force majeure as defined in Section D.2. The District agrees not to contest the use of the administrative civil liability process and waives any claim that Water Code Sections 13323-13326 and 13328 do not apply to administrative or judicial enforcement of the stipulated penalty provisions of this Agreement. However, the District reserves the right to petition to the State Board for review of any decision made by the Regional Board under this paragraph. Upon the filing of such a petition, the District and the Regional Board shall jointly request that the petition be held in abeyance until such time as it is determined, as applicable, that (i) the stipulated penalties at issue are not subject to cancellation and forgiveness on the date the Second 5-Year Permit becomes final as set forth in Section E.1.a, (ii) the stipulated penalties at issue are not subject to cancellation and forgiveness on the date for issuing the notice to proceed to the contractor as set forth in Section E.1.b, or (iii) the District has achieved full compliance with secondary treatment requirements, such that it can be determined whether any stipulated penalties are due and the amount thereof. The intent of the foregoing provisions is to ensure that there will be no more than three (3) occasions on which the State Board will be required to take action on a petition filed by the District with respect to the issue of stipulated penalties for completion dates under the Conversion Schedule. Following the expiration of the abeyance and either final action by the State Board on the District's petition or the dismissal of the District's petition by the State Board without review, the District may, at the times described in subparagraphs (i), (ii) and (iii), above, file a judicial appeal in accordance with California Water Code Section 13330 with respect to the

administrative civil liability order. In any such judicial appeal(s), the District agrees not to challenge the daily amount of the stipulated penalties as set forth in this Agreement. The issues in such judicial appeal(s) may include, without limitation, whether the District undertook or completed the required task or activity by the completion date(s) in question, the number of days or months for which stipulated penalties apply, and whether the delay, if any, was caused by force majeure as defined in Section D.2, provided that nothing in this paragraph 4 shall relieve the District of any obligation to exhaust applicable administrative remedies prior to seeking judicial relief.

5. The requirements of this Agreement with respect to (i) the Conversion Schedule, (ii) the Conversion Period, (iii) Enhanced Treatment, and (iv) stipulated penalties shall be incorporated into the findings adopted by the Regional Board in connection with the First and Second 5-Year Permits. In addition to the procedures set forth above for enforcement with respect to failure to meet the Conversion Schedule or to undertake Enhanced Treatment activities, the Regional Board may use any enforcement action or procedure to remedy any and all violations of the terms of any permit (including the First or Second 5-Year Permits) issued to the District, including, without limitation, any remedy set forth in the California Water Code. Nothing in this Agreement shall limit other remedies available to the Regional Board to enforce the terms and conditions of any permit or 401 certification issued to the District.

F. MISCELLANEOUS PROVISIONS

1. No Admission of Liability. Except as set forth in this Agreement, nothing in this Agreement shall be construed as an admission of liability by any Party, or as a waiver of any future claims or causes of action, or as an agreement on the appropriate standard of review or causes of action or claims that may be asserted in challenging any permit issued to the District or the requirements thereof.

2. Signatures. This Agreement may be signed in counterparts. Signatures transmitted by facsimile shall be deemed to have the same force and effect as original signatures. Photocopies and facsimiles of counterparts shall be binding and admissible as originals.

3. Representation by Counsel. The Parties agree and confirm that this Agreement has been freely and voluntarily entered into by the Parties, each of which has been fully represented by counsel at every stage of the proceedings, and that no representations or promises of

any kind, other than as contained herein, have been made by any Party to induce any other Party to enter into this Agreement. The language of this Agreement shall be construed in its entirety, according to its fair meaning, and not strictly for or against any of the Parties.

4. Integrated Agreement. Except as otherwise set forth in this Settlement Agreement, this Agreement contains the entire understanding of the Parties concerning the matters contained herein and constitutes an integrated agreement.

5. Subsequent Amendment. This Agreement may not be altered, amended, modified, or otherwise changed except after a public meeting by a writing executed by each of the Parties. The Regional Board may, on a case-by-case basis in a public meeting, delegate to the Executive Officer the authority to approve and sign on behalf of the Regional Board written amendments to this Agreement.

6. Effective Date. This Agreement is effective when signed by all Parties and the effective date shall be date of the last signature.

7. Notice Requirements. Any notice provided under this Agreement shall be provided by facsimile and first class mail as follows:

If to the District:
Kamil S. Azoury, General Manager
GOLETA SANITARY DISTRICT
P. O. Box 906
Goleta, CA 93116
Telephone: 805-967-4519
Facsimile: 805-964-3583

Richard G. Battles, Esq.
MULLEN & HENZEL LLP
112 E. Victoria St., P.O. Drawer 789
Santa Barbara, CA 93102-0789
Telephone: 805-966-1501
Facsimile: 805-966-9204

Melissa A. Thorme, Esq.
DOWNEY BRAND, LLP
555 Capitol Mall, Tenth Floor
Sacramento, CA 95814-4686
Telephone: 916-444-1000
Facsimile: 916-444-2100

If to the Regional Board:
Roger W. Briggs, Executive Officer
REGIONAL WATER QUALITY CONTROL BOARD, CENTRAL COAST REGION
895 Aerovista Place, Suite 101
San Luis Obispo, CA 93401
Telephone: 805-549-3147
Facsimile: 805-543-0397

Lori T. Okun, Esq.
STATE WATER RESOURCES CONTROL BOARD
1001 I Street, P.O. Box 100
Sacramento, CA 95814
Telephone: 916-341-5165
Facsimile: 916-341-5199

Marilyn H. Levin, Esq.
OFFICE OF THE ATTORNEY GENERAL
300 South Spring Street, Suite 1702
Los Angeles, CA 90013-1233
Telephone: 213- 897-2612
Facsimile: 213-897-2802

8. Authority. Each Party to this Agreement warrants that the individual executing this Agreement is duly authorized to do so and that execution is the act and deed of the Party.

9. Counsel Approval. Counsel for the represented Parties have negotiated, read, and approved as to form the language of this Agreement, the language of which shall be construed in its entirety according to its fair meaning and not strictly for or against any of the Parties.

10. Fees and Costs. The Parties acknowledge and agree that each of them will bear their own attorneys' fees, costs, including costs pursuant to C.C.P. section 1094.5, and expenses arising out of and/or connected with the disputes which are the subject of this Agreement, including but not limited to all attorneys' fees, costs, and expenses arising out of the Amended Petition or the negotiation, drafting, and execution of this Agreement, and any dispute arising out of this Agreement. The agreement that each party shall bear its own fees, costs, and expenses arising out of the claims alleged in the Amended Petition as of the date of this Agreement shall apply notwithstanding any provision that this agreement shall become null and void and regardless of when such fees or costs are incurred.

11. Severability. In the event that any provision of this Agreement is determined by a court of competent jurisdiction to be invalid, the remainder of this Agreement shall not be affected thereby and shall remain in full force and effect.

12. Successors in Interest. If applicable law allows the Executive Officer to issue waste discharge requirements at the time of consideration of the Second 5-Year Permit, then all provisions of this Agreement requiring the Executive Officer to make any recommendation shall not apply to the Executive Officer, but shall instead apply to the highest-ranking Regional Board staff person other than the Executive Officer. If applicable law does not include a process to petition to the State Board or its successor, then the District shall exhaust all other administrative remedies then available where this Agreement requires the District to file a petition to the State Board or otherwise exhaust administrative remedies. In all other cases, whenever in this Agreement one of the Parties hereto is named or referenced, the legal representatives, successors, and permitted assigns of such Party shall be included and all covenants and agreements contained in this Agreement by or on behalf of any of the Parties hereto shall bind and inure to the benefit of their respective successors and permitted assigns, whether so expressed or not.

13. References. This Agreement is made without respect to number or gender, and as such, any reference to a party hereto by any pronoun shall include the singular, the plural, the masculine, and the feminine.

IN WITNESS WHEREOF, the Parties have executed this Agreement on the dates indicated below.

Dated: _____, 2004

CALIFORNIA REGIONAL WATER QUALITY CONTROL BOARD, CENTRAL COAST REGION

By: _____
Roger W. Briggs, Executive Officer

Dated: _____, 2004

GOLETA SANITARY DISTRICT

By: _____
John S. Carter, President Pro-Tem

By: _____
Kamil S. Azoury,
General Manger/Board Secretary

APPROVED AS TO FORM

Dated: _____, 2004

_____
Lori T. Okun
Regional Board Counsel

Dated: _____, 2004

MULLEN & HENZELL L.L.P.

By: _____
Richard G. Battles
Attorneys for Goleta Sanitary District

G:\00551\0818\DOCS\11-08-04 Settlement Agreement final.doc

Goleta Sanitary District

Facilities Planning Study

June 23, 2008

HDR

Table of Contents

Executive Summary 1

1.0 Introduction 8

1.1 Background 8

2.0 Existing Treatment Plant 10

2.1 Existing Treatment Facilities and Processes 10
2.1.1 Collection System 10
2.1.2 GSD Pump Station and Headworks 10
2.1.3 Primary Treatment 12
2.1.4 Secondary Treatment 12
2.1.5 Chlorine Contact Chamber 12
2.1.6 Sludge Treatment 12
2.1.7 Reclamation Facilities 12
2.1.8 Ocean Outfall 13
2.2 Condition and Performance Assessments 13

3.0 Basis of Facility Planning 15

3.1 Basis for Design 15
3.1.1 Regulatory Requirements 15
3.1.2 Projected Flows and Loads 16
3.1.3 Projected Solids Production 21
3.1.4 Flow Equalization 21
3.1.5 Plant Reliability Criteria 23
3.1.6 Design Concepts and Constraints 23

4.0 Development and Evaluation of Liquid Treatment Alternative 25

4.1.1 Alternative Evaluation Assumptions 25
4.2 Common Facility Improvements 26
4.2.1 Capital Cost for Common Facility Improvements 26
4.2.2 Common Facilities Operation and Maintenance Cost Assumptions 27
4.3 Secondary Wastewater Treatment Alternatives 28
4.3.1 Alternative 1 – Existing TF and SC Process 29
4.3.2 Alternative 2 – RF followed by Activated Sludge 31
4.3.3 Alternative 2A – Redundant RF and Activated Sludge 33
4.3.4 Alternative 2B – RF and Large Activated Sludge Tank 35
4.3.5 Alternative 3 – Existing TF/SC and Parallel Activated Sludge Train 37
4.3.6 Alternative 4 – Existing TF/SC and Parallel MBR Train 39
4.3.7 Alternative 5 – Activated Sludge Plant 41
4.3.8 Alternative 6 – Parallel Biological Aerated Filter (BAF) 43
4.3.9 Alternative 7 – Microfiltration (MF) of Primary Effluent 45
4.3.10 Alternative 8 – Wetlands for Secondary Treatment 45
4.4 Liquid Treatment Alternatives Evaluation and Selection 46

4.4.1 Basis for Cost Opinions 46
4.4.2 Non-Economic Criteria 51
4.4.3 Alternative Selection 53

5.0 Development and Evaluation of Solids Treatment Alternative 56

5.1 Solids Alternative Evaluation Assumptions 57
5.2 Common Facility Improvements 57
5.2.1 Common Solids Handling Facilities Capital Improvements 57
5.2.2 Common Solids Handling Facilities Operation and Maintenance Cost 57
5.3 Solids Handling Alternatives 58
5.3.1 Solids Handling Alternative 1 – Base Alternative 58
5.3.2 Solids Handling Alternative 2 – In-Vessel Composting 61
5.3.3 Solids Handling Alternative 3A – Dryer/Pelletizer for GSD Biosolids 64
5.3.4 Solids Handling Alternative 3B – Dryer/Pelletizer Regional Solids 67
5.4 Economic Evaluation of Solids Handling Alternatives 69
5.4.1 Life-Cycle Cost Sensitivity Analysis 69
5.5 Non-Economic Evaluation of Solids Handling Alternatives 73
5.6 Evaluation Criteria 73
5.6.1 Solids Alternative Selection 75

6.0 Miscellaneous Capital Improvements 76

6.1 Site Plan Options 76
6.1.1 Administration Building 76
6.1.2 Laboratory 79
6.1.3 Shower and Locker Building 79
6.2 Task 5.03: Probable Costs 84

7.0 Recommended Project 86

7.1 Recommended Liquid Treatment Alternative 2B One Roughing Filter followed by Large Activated Sludge 92
7.1.1 Roughing Filter 92
7.1.2 Activated Sludge System 92
7.1.3 Secondary Effluent Pumping 93
7.1.4 Secondary Effluent Disinfection 93
7.1.5 Effluent Pumping Station 94
7.2 Recommended Solids Treatment Alternative 1 Base Alternative 94
7.2.1 Dissolved Air Flotation Tanks (DAFTs) 94
7.2.2 DAF Thickened Waste Activated Sludge (TWAS) Pumping Station 94
7.2.3 Anaerobic Digestion 94
7.2.4 Digested Sludge Pumping Station 94
7.2.5 Dewatering Centrifuge 94
7.2.6 Sludge Holding Tank 95
7.2.7 Co-Generation System 95
7.2.8 Solids Stabilization Ponds 95
7.3 Recommended Common Improvements 95
7.3.1 Headworks Area 95
7.3.2 Flow Equalization 95

7.3.3 Miscellaneous Structural Repairs 96
7.3.4 Space Utilization 96
7.3.5 Recommended Cost by Project Packages 96
7.3.6 Project Schedule 99

List of Tables

Table 1. Summary of Improvements 4
Table 2. Recommended Project Cost by Package 6
Table 3. Recommended Project Cost 7
Table 4. Summary of Recommended Improvements Identified During the Plant Condition and Performance Assessments 13
Table 5. Anticipated Effluent Limits for Ocean Discharge 15
Table 6. GSD Secondary Effluent Yearly Average Characteristics 16
Table 7. Design Flows 18
Table 8. Influent BOD Design Loading 19
Table 9. Influent TSS Design Loading 19
Table 10. Flow Equalization Basin Sizing 23
Table 11. Capital Cost for Common Facility Improvements 27
Table 12. Common Facilities Operation and Maintenance Costs 28
Table 13. Operation & Maintenance Cost Factors 49
Table 14. Capital Cost Opinion Summary of Viable Alternatives 49
Table 15. Liquid Alternatives O&M Costs Summary Table 50
Table 16. 20-Year Life-Cycle Analysis 51
Table 17. Non-Economic Evaluation of Technology Factors 52
Table 18. Non-Economic Evaluation of Regulatory and Reuse Factors 53
Table 19. Non-Economic Factor Summary 53
Table 20. Alternative Evaluation Combined Score and Ranking 53
Table 21. Solids /Treatment Alternatives Cost Summary 69
Table 22. Results of the 20-Year Life-Cycle Cost Analysis for Solids Treatment Alternatives, Dollars (Escalated) 70
Table 23. Annual O&M for Sensitivity Analysis 71
Table 24. Solids Handling Alternatives Non-Economic Factor Evaluation 74
Table 25. Solids Alternatives Non-Economic Factor Scoring 75
Table 26. Solids Alternative Evaluation and Final Ranking 75
Table 27. New Locker and Shower Building Architectural Program 84
Table 28. Probable Costs for Miscellaneous Capital Improvements 85
Table 29. Influent and Design Flow Conditions 88
Table 30. Influent Wastewater Composition 88
Table 31. Preliminary Treatment, Primary Treatment, and Flow Equalization 88
Table 32. Secondary Treatment 89
Table 33. Effluent Disinfection 91
Table 34. Solids Treatment and Disposal 91
Table 35. Recommended Project Cost by Packages 97
Table 36. Recommended Project Cost 97
Table 37. Recommended Project Cost Detailed Escalation 98

List of Figures

Figure 1. Summary of Improvements Project Site Plan 5
Figure 2. Goleta Wastewater Treatment Plant Site 9
Figure 3. Existing Treatment Plant Process /Flow Diagram 11
Figure 4. Average Monthly Flow Showing Annual Influent Flow Variations 17
Figure 5. 2005 Influent Flow and Loading Data 20
Figure 6. 2004 Influent Flow and Loading Data 20
Figure 7. 2003 Influent Flow and Loading Data 21
Figure 8. Dry Weather Diurnal Curve 22
Figure 9. Alternative 1 Process Flow Schematic 30
Figure 10. Alternative 1 Layout Schematic 30
Figure 11. Alternative 2 Process Flow Schematic 32
Figure 12. Alternative 2 Layout Schematic 32
Figure 13. Alternative 2A Process Flow Schematic 34
Figure 14. Alternative 2A Layout Schematic 34
Figure 15. Alternative 2B Process Flow Schematic 36
Figure 16. Alternative 2B Layout Schematic 36
Figure 17. Alternative 3 Process Flow Schematic 38
Figure 18. Alternative 3 Layout Schematic 38
Figure 19. Alternative 4 Process Flow Schematic 40
Figure 20. Alternative 4 Layout Schematic 40
Figure 21. Alternative 5 Process Flow Schematic 42
Figure 22. Alternative 5 Layout Schematic 42
Figure 23. Alternative 6 Process Flow Schematic 44
Figure 24. Alternative 6 Layout Schematic 44
Figure 25. Recommended Alternative Process Schematic 55
Figure 26. Process Schematic Solids Treatment Alternative 1 – Base Alternative 59
Figure 27. Process Schematic Solids Handling Alternative 2 – In-Vessel Composting 62
Figure 28. Dryer Layout 65
Figure 29. Process Schematic Alternative 3A – Dryer/Pelletizer GSD Solids Only 66
Figure 30. Process Schematic Alternative 3B – Dryer/Pelletizer Regional Solids 68
Figure 31. Net Present Value Analysis of Alternatives 72
Figure 32. New Visitors Entrance Location Options 77
Figure 33. Proposed Visitors Entrance Revision 78
Figure 34. Proposed Laboratory Revisions 80
Figure 35. Proposed Shower and Locker Building Site Plan 81
Figure 36. Proposed Shower and Locker Building Floor Plan 82
Figure 37. Proposed Shower and Locker Building Elevations 83
Figure 38. Summary of Improvements Project Site Plan 87
Figure 39. Preliminary Project Schedule 100

List of Appendices

Appendix A – Condition Assessment, Process Unit Data Sheets
Appendix B – Envision Process Calculations
Appendix C – Capital Costs
Appendix D – Operation and Maintenance Costs
Appendix E – Life-Cycle Cost Evaluation

Executive Summary

In November 2004, Goleta Sanitary District (GSD) and the Regional Water Quality Control Board (RWQCB) Central Region entered into a settlement agreement that allowed GSD to continue to operate under the provisions of Section 301(H) of the Clean Water Act until November 2014, when the discharge to the Pacific Ocean must meet secondary treatment standards. The agreement also requires GSD to submit a Facility Planning Study summarizing the recommended approach to upgrade the existing facilities in order to meet the anticipated National Pollutant Discharge Elimination System (NPDES) permit for secondary treatment. This Study must be submitted to the RWQCB by June 30, 2008.

GSD retained HDR Engineering to prepare a facilities planning document to (1) identify a cost-effective alternative to meet the provisions of the settlement agreement, (2) identify facility-wide improvements to support facilities and space utilization, and (3) determine a long-term, local, self-sufficient biosolids reuse program.

Treatment Process Alternatives

This facilities planning study summarizes the projected treatment plant hydraulic and organic loads, summarizes a preliminary condition assessment of the existing facilities, presents a conceptual-level design of liquid and solids treatment alternatives, and selects a recommended project using economic and non-economic factors.

Eight liquid treatment and four solids handling alternatives were developed and evaluated to identify the best alternative based on economic and non-economic factors. For consistency, all secondary treatment options were developed using common effluent quality parameters, flows, and loads. In addition to using a modeling tool to develop conceptual design criteria, several assumptions were made that offered a common basis for alternative evaluation. As a result of the evaluation, the recommended liquid treatment alternative is Alternative 2B. This alternative includes the following features:

- Continue operating the influent pumping station.
- Replace the screens with ¼-inch slot opening screens and provide a screenings washer/compactor.
- Continue operating the existing aerated grit chambers and grit removal system.
- Continue operating the existing primary sedimentation tanks.
- Construct a primary effluent diversion structure and primary effluent equalization basin and return pump station.
- Upgrade the existing trickling filter (TF) to operate with the entire plant flow as a roughing filter (RF). This includes replacing recirculation pumps and distributor mechanism.
- Construct a new activated sludge aeration basin and new blowers and diffusers. The activated sludge system would be sized for the full plant capacity as if no RF existed and be sufficiently large to allow carbonaceous BOD removal or to nitrify. This secondary treatment option provides flexibility and added reliability and reduces energy cost.
- Install two new secondary clarifiers and return activated sludge (RAS) pumping station.

- Add pumping capacity to the secondary effluent pumping station to convey the increased secondary effluent flow to the disinfection system and the tertiary treatment plant.
- Continue operating the existing chlorine contact chamber and hypochlorite and bisulfite storage and feed system.

The recommended solids handling alternative is Alternative 1 Base Alternative and consists of the following:

- Continue operating the three existing anaerobic digesters and heating system using digester gas to fuel hot water boilers.
- Add a fourth 55-foot-diameter digester. The treatment capacity provided by the three existing digesters does not provide sufficient system reliability when using the existing solids treatment process if one digester is off-line for maintenance. The fourth digester is not needed if a Dryer/Pelletizer is added to the solids treatment train.
- Install two dissolved air flotation thickeners (DAFTs) for waste activated sludge (WAS) and eliminate the practice of co-settling WAS and primary sludge in the primary sedimentation tanks.
- Install a dewatering facility in a new building using a 30-inch centrifuge. No standby centrifuge is considered necessary. In case of centrifuge breakdown, send digested sludge to the stabilization ponds.
- Build a 20,000-gallon sludge holding tank adjacent to the sludge stabilization ponds so that sludge from the ponds can be stored and pumped from this tank to the centrifuge.
- Use the existing pond dredge pump to transfer sludge from the ponds to the sludge drying beds. Dispose of cake dewatered in the centrifuge as current, hauling it for disposal or reuse.
- Send a portion of the digested sludge to the sludge stabilization ponds and pump it to the existing drying beds to continue producing the Class A biosolids the Agency offers to the public at their facility.
- Addition of a biosolids Dryer/Pelletizer is highly dependent on biosolids disposal and reuse regulations. Inability to dispose or reuse the biosolids locally will increase disposal costs. When this occurs, GSD will have to re-evaluate the economics of a Dryer/Pelletizer facility. Economic factors such as disposal cost, energy cost, product marketability, financial benefits and disadvantages of becoming a localized or Regional solids handling facility will need to be evaluated.
- The project also includes a 350-kW generator set using the engine cooling system with existing sludge heat exchangers for digester heating. If implemented, the gas boilers will be the backup to the digester heating system.
- If a dryer is installed, it is preferable to use digester gas to fuel the boilers to heat the digesters and use the remainder gas as fuel for the dryer. This would offset natural gas cost. In this case, it is not recommended to install the cogeneration system.

Recommended Improvements to Common Facilities

The recommended improvements to common facilities are listed below. Minor modifications to the laboratory have already been implemented by GSD staff.

- Replace the two existing bar screens with automatic cleaning ¼-inch opening screens and install two new screening washer/compactors.
- Upgrade the Administration Building entrance so that the reception area is facing the parking lot.
- Demolish the existing Locker and Shower Building and replace with a new 2700-square-foot building located at the site of the existing building.
- Replace the digester waste gas burner.
- Replace two hot water boilers with units meeting Santa Barbara County Air Pollution Control District (APCD) emission limits.
- Replace existing sludge dredge engine driven pump for compliance with APCD.
- Add new pump station to drain chlorine contact channel and pump reclaimed water backwash to headworks.
- Refurbish metal coating on all existing process equipment.
- Add biological odor reduction tower to headworks.

Recommended Project Packages and Implementation Phasing

HDR is recommending that the project be segregated into three packages. The Basic Project package will include facilities required to meet the settlement agreement with the RWQCB to treat the entire flow tributary to the plant to secondary treatment level.

The Supplemental Improvements include facilities that would improve the headworks operation and maintenance by replacing the existing bar screens and adding a screenings compactor. This package also includes a new cogeneration system, the new Shower and Locker Room Building, and a fourth digester. The addition of a new cogeneration system and fourth digester are project components that are entirely dependent upon economic triggers associated with energy cost and biosolids disposal and reuse costs. These economic factors will impact the decision to add a future Pelletizer, which is the last package.

HDR recommends that the new Shower and Locker Room Building and Headworks improvements be completed at the same time as the basic project package. The cogeneration and fourth digester are components of the supplemental improvements that will be constructed at a future date based on economics and projected increases in flows tributary to the plant. Table 1 summarizes the improvements for the three packages. The improvements are shown on Figure 1.

Table 1. Summary of Improvements

Basic Project	Supplemental Improvements	Pelletizer
Primary Effluent Flow Equalization Basin	Headworks Improvements	Pelletizer Installation
Primary Effluent Junction Structure	Cogeneration System	
Equalized Flow Pump Station	Digester Expansion	
Trickling Filter Pumping Station	Shower and Locker Room Building	
New Aeration Basins	Administration Building Improvements	
Blower Building	Heat Exchanger Upgrades	
Secondary Sedimentation Tanks	Waste Gas Burner Replacement	
RAS Station 2		
Secondary Effluent Pumping Station 2		
WAS Thickening		
Solids Dewatering Building		
Sludge Holding Tank		

Replace Figure with figure landscape on 11 by 17 sheet Use updated sheet.

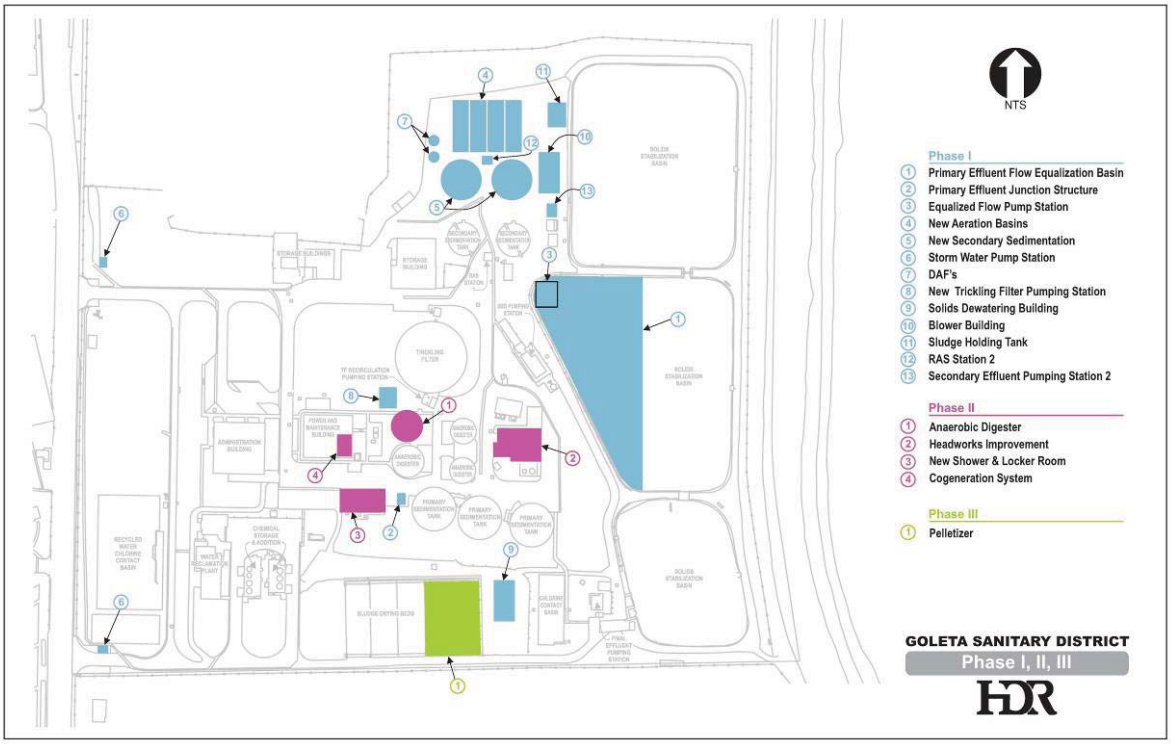

Figure 1. Summary of Improvements

Recommended Project Cost

HDR segregated the recommended project cost to reflect the improvements and upgrades contemplated for the Basic Project, Supplemental Improvements, and Biosolids Pelletizer. This planning-level cost opinion was prepared in the second quarter of 2007 and is presented in Table 2 below. The cost includes construction, engineering, legal, administration, and 30-percent contingency.

Table 2. Recommended Project Cost by Package

	Basic Project	Supplemental Improvements	Pelletizer
Site Work	$1,306,261	$340,063	$150,000
Concrete	$3,208,700	$393,618	$333,600
Masonry	$150,000	$680,000	$0
Metals	$37,500	$0	$450,000
Finishes	$0	$37,500	$0
Equipment	$5,893,150	$2,540,500	$6,250,000
Mechanical	$1,185,837	$147,000	$30,000
Electrical	$1,303,452	$203,240	$500,000
Instrumentation/Controls	$489,315	$254,050	$625,000
General Conditions	$9,998,733	$3,385,381	$6,142,192
Construction Sub Total	**$23,572,948**	**$7,981,353**	**$14,480,792**
Engineering, Legal and Administration (35%)	$8,250,532	$2,793,473	$5,068,277
Project Total (2007$)	**$31,820,000**	**$10,770,000**	**$19,550,000**
Escalation to Midpoint (3% to 2012)	$5,070,000	$1,720,000	$3,110,000
Project Cost	**$36,890,000**	**$12,490,000**	**$22,660,000**

GSD has decided to implement the Basic Project and some of the components of the Supplemental Improvements. The design and construction of the anaerobic digester and the cogeneration system, both part of the Supplemental Improvements, will be deferred. The implementation of these two components depends on economic triggers associated with biosolids disposal. Therefore, there is no certainty regarding when and if they would be implemented.

The project cost summarized in the table above has been updated to reflect unit costs for the second quarter of 2008. **Construction Cost (subtotal 1) in Table 3 increased from $19.9 million to $24.7 million, which reflects increases in the steel, concrete, fuel, and other commodities over the past year.** Table 3 shows the updated cost summary for the Common Facilities Improvements (including Headworks), Recommended Secondary Treatment Alternative (2B), Solids Dewatering, and Administration Building Improvements and Shower and Locker Room Building. Table 3 costs have been escalated to the project's midpoint of construction of May 2012. The escalation factor used for the 2008 cost opinion is higher than the 2007 factor used in Table 2 to reflect current economic trends impacting the cost of labor and materials.

Table 3. Recommended Project Cost

Cost Item	Recommended Project Cost 2nd QTR 2007 Cost Basis	Recommended Project Cost 2nd QTR 2008 Cost Basis
Common Facilities Improvements (Including Headworks)	$4,942,597	$6,080,396
Recommended Secondary Treatment Alternative (2B)	$7,820,450	$9,983,344
Solids Dewatering	$1,686,605	$1,989,165
Admin Building Improvements and Shower and Locker Room Building	$899,400	$953,800
Construction Subtotal (Direct Costs)	$15,349,052	$19,006,705
Contingency (30%)	$4,604,715	$5,702,011
Subtotal 1	$19,953,767	$24,708,716
Mobilization and Demobilization (6% of Subtotal 1 Increased to 9% for 2008)	$1,197,226	$2,223,784
Subtotal 2	$21,150,993	$26,932,500
General Conditions (10% of Subtotal 2)	$2,115,099	$2,693,250
Subtotal 3	$23,266,092	$29,625,750
Contractor Profit (8% of Subtotal 3)	$1,861,287	$2,370,060
Subtotal 4	$25,127,380	$31,995,810
Bonds (2% of Subtotal 4)	$502,548	$639,916
Subtotal 5	$25,629,927	$32,635,727
Insurance and Administration (4% of Subtotal 5)	$1,025,197	$1,305,429
Subtotal 6	$26,655,125	$33,941,156
Engineering, Administration and Legal (35% of subtotal 6 for 2007 and 20% in 2008)	$9,329,294	$6,788,231
Subtotal 7	$35,984,418	$40,729,387
Escalation 3% per year for 2007 and 5.57% for 2008	$5,732,606	$10,316,963
Total Project Costs	**$41,717,024**	**$51,046,350**

Project Schedule

The immediate deadline is to submit the Final Facilities Planning Study by June 30, 2008. The next regulatory deadline is November 2014 when the upgraded facility must be in operation and in full compliance with the revised National Pollutant Discharge Elimination System Permit.

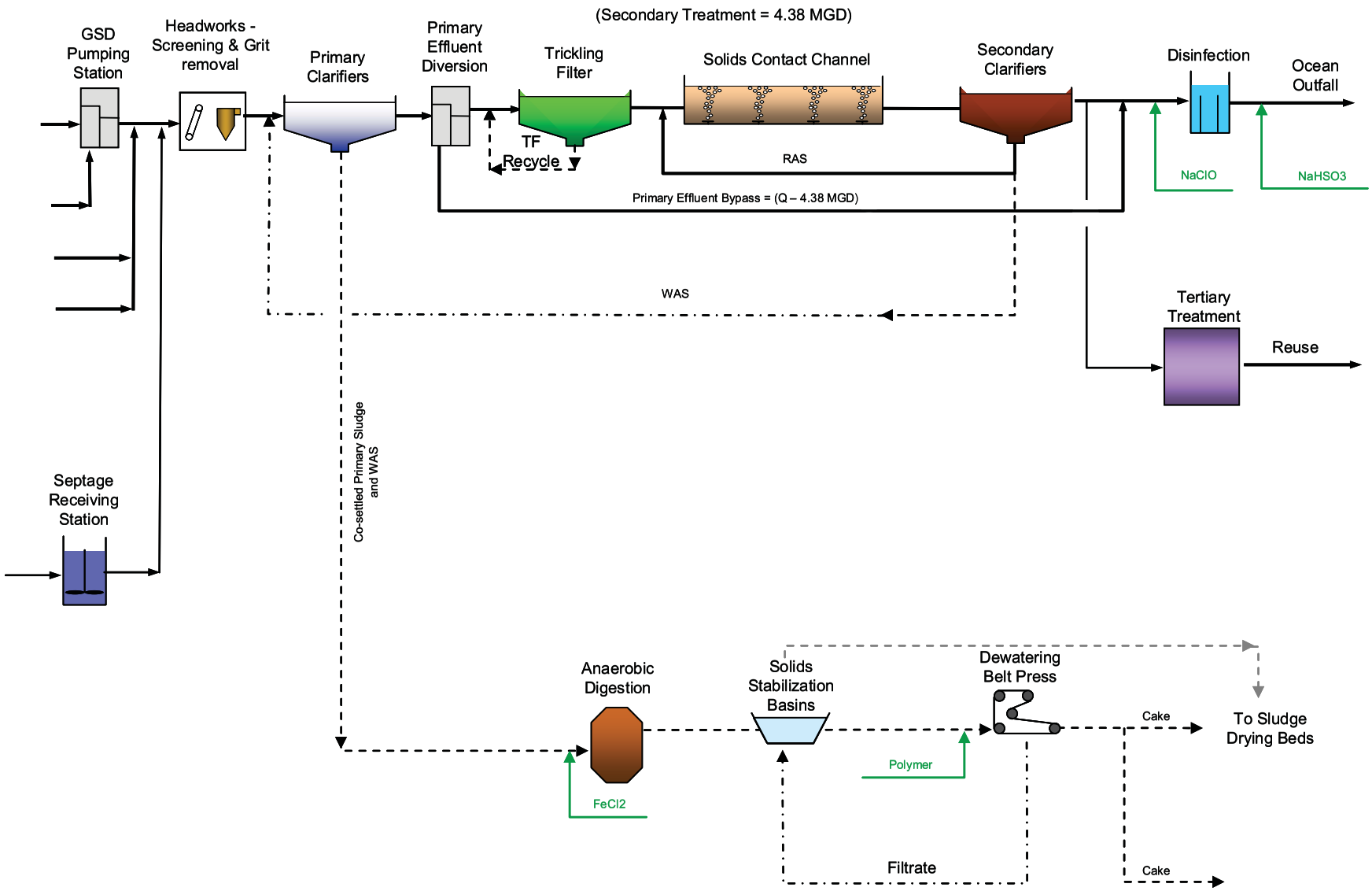

Figure 3. Existing Treatment Plant Process /Flow Diagram

3.0 Basis of Facility Planning

3.1 Basis for Design

3.1.1 Regulatory Requirements

The RWQCB has not established effluent quality standards for the Goleta WWTP. It is anticipated that GSD and RWQCB will negotiate new NPDES permit requirements for full secondary treatment with ample time to design, construct, test, and start the new facilities by November 2014. Viable secondary treatment options must be developed as part of the planning process for the anticipated WWTP improvements. HDR assumed that the new GSD NPDES permit will contain, at a minimum, equivalent effluent discharge requirements as other wastewater treatment plants discharging to the Pacific Ocean and under the jurisdiction of the RWQCB Central Region. Table 5 lists anticipated effluent limits for the major constituents for ocean discharge.

Table 5. Anticipated Effluent Limits for Ocean Discharge

Constituent	Monthly Average	7 Day Average	Daily Maximum
CBOD, mg/L	25	40	90
TSS, mg/L	30	45	90
Oil & Grease, mg/L	25	40	75
Settleable Solids, mg/L	1.0	1.5	3.0
Turbidity, NTU	75	100	225
pH	Between 6 and 9 at all times		
Total Coliform/100mL	-	2,300	16,000
Fecal Coliform/100mL	-	460	3,200
Cl2 Residual, µg/L	240	-	970

Although GSD will be discharging to the ocean, it is required to produce secondary effluent of adequate quality to supply the on-site water reclamation facility. Therefore, secondary effluent quality has to meet the anticipated NPDES requirements and minimum standards for water reclamation criteria as set forth by Title 22 of the California Administrative Code.

Secondary effluent must meet turbidity requirements before it can be used at the water reclamation plant. These requirements listed in Title 22, Division 4, Chapter 3, Article 3, Section 60304 – Recycled Water Used for Irrigation include:

- Filter effluent turbidity cannot exceed 2 NTU continuously measured.
- Filter influent cannot exceed 5 NTU for a period of longer than 15 minutes.
- Filter influent cannot exceed 10 NTU at any time.

- Allow for chemical addition or diversion of flow once influent turbidity exceeds 5 NTU for 15 minutes.

Historical secondary effluent quality for the water reclamation plant is summarized in Table 6.

Table 6. GSD Secondary Effluent Yearly Average Characteristics

	CBOD, mg/L	TSS, mg/L	Turbidity, NTU
2003	6.3	10.0	4.5
2004	7.4	12.1	5.8
2005	7.3	9.9	5.6
Average	7.0	10.6	5.3
Design	**15**	**15**	**<10**

Note: To be used for water reclamation, effluent turbidity cannot exceed 5 NTU for more than 15 minutes without requiring chemical addition or 10 NTU at any time.

The turbidity values above show that secondary effluent turbidity is marginal and must be improved to consistently meet Title 22 requirements for recycled water. The proposed secondary treatment process will produce secondary effluent with peak turbidity lower than 5 NTU.

3.1.2 Projected Flows and Loads

3.1.2.1 Projected Flow Calculation

HDR analyzed available flow data from the Goleta WWTP to establish design peaking factors. The analysis was conducted to confirm the current design dry weather average daily flow (DWADF) of 9.0 MGD and annual average dry weather flow (AADWF) of 9.84. The dry weather average flow was calculated by determining the lowest 90-day minimum running average. The annual average daily flow (AADF) flow was calculated by averaging the daily flows for a period of one year. On average, the annual average daily flow is 9 percent higher than the DWADF. Since the RWQCB effluent discharge permits use monthly requirements, an annual maximum month (MM) flow was used for sizing the biological treatment process. The MM flow is determined by the highest average 30-day maximum flow over a given year.

Seasonal flow variations are noticeable throughout the year. Review of the flow data shows that the high-flow seasons are spring and fall. Seasonal variations are mostly dependent on rainfall, but some variation is attributed to the UC Santa Barbara (UCSB) school year. Contributions by UCSB are greater in the fall and spring, which also correspond to the periods of seasonal rain. Figure 4 illustrates the total average monthly flow to the treatment plant over the data period. As shown, the flows are higher in the spring and fall except for the winter of 2004-2005, when periods of heavy rain dramatically increased the flow tributary to the treatment plant.

.

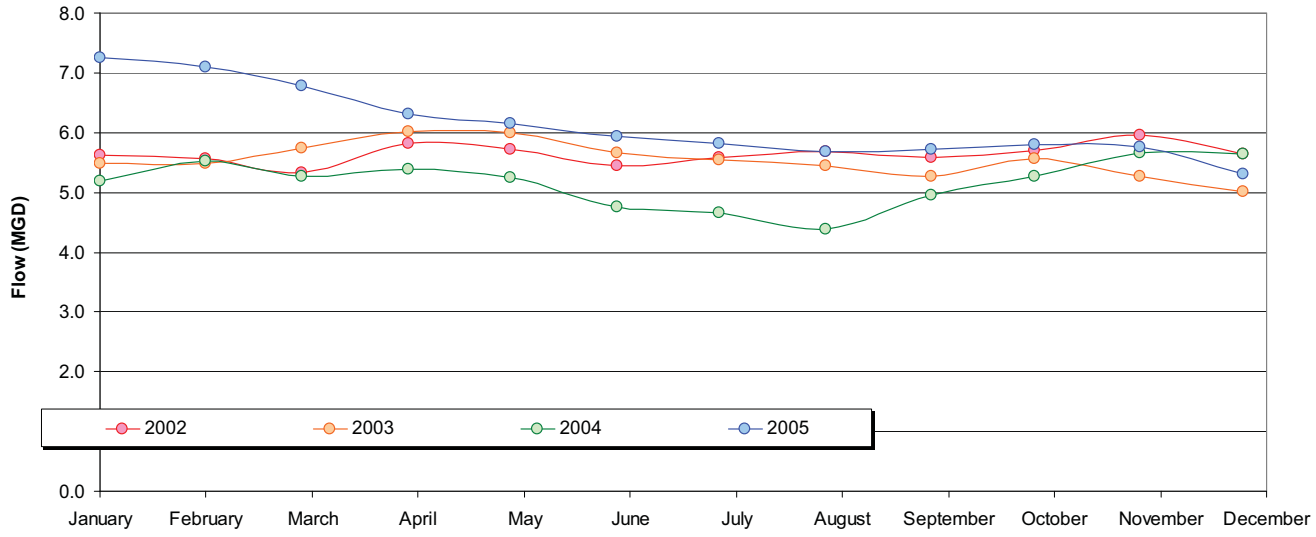

Figure 4. Average Monthly Flow Showing Annual Influent Flow Variations

The rationale used to determine the design flow is as follows:

- Used historical flow data from January 1, 2003, to December 31, 2005.
- Calculated the annual average flow for each year.
- Established the 90-day average minimum value to determine the AADWF condition.
- Established the 30-day average maximum value to determine the MM flow condition.
- Established peak day conditions for a one-year period.
- The ratio of annual average to the 90-day dry weather flow is 1.09.
- The ratio of 30-day maximum to the 90-day dry weather flow is 1.25.
- The ratio of peak day to the 90-day dry weather flow is 2.12

A summary of the proposed design flows is listed in Table 7. Flows were determined using a build-out DWADF of 9.00 MGD.

Table 7. Design Flows

Period	Dry Weather Average Flow, MGD	Annual Average Daily Flow, MGD	Maximum Month, MGD	Peak Day, MGD	Peak Hour, MGD
2003	5.28	5.54	6.11	9.58	No Data-
2004	4.56	5.16	5.80	8.59	No Data
2005	5.54	6.13	7.38	14.32	22.50
Average	5.13	5.61	6.43	10.83	5.13
Ratio to Average	1	1.09	1.25	2.12	Not established
Design	9.00	9.84	11.29	19.08	Not established

Note: 9.00 MGD is the current dry weather average design flow for the treatment plant.

The rationale used to determine BOD and TSS design loadings is as follows:

- Used historical BOD and TSS concentrations as sampled downstream of the preliminary treatment processes.
- Because BOD and TSS influent concentrations are not collected from plant influent, a 5-percent reduction for both was assumed to account for preliminary treatment with the current facilities.
- Annual average 90-day minimum and MM BOD and TSS loadings were determined using available data.

Table 8 and Table 9 list proposed design influent BOD and TSS concentrations. The loadings were derived averaging 2003 through 2005 loadings and multiplying by the design flow rates summarized in Table 7.

Table 8. Influent BOD Design Loading

	Annual Average	90 Day Minimum[a]	Maximum Month
2003 Loading, lbs/day	11,500	10,900	13,000
2004 Loading, lbs/day	10,900	9,300	12,500
2005 Loading, lbs/day	11,900	10,100	14,300
Average Loading, lbs/day	11,400	10,100	13,300
Design Loading After Headworks, lbs/day	20,100	17,700	23,300
Design Concentration, mg/L	245	236	247
Additional 5% for Raw Influent Concentration, mg/L[b]	258	248	260
New Design Loading, lbs/day	21,200	18,600	24,500

[a] Based on the average of the lowest flow for a 90-day period
[b] 5% is the assumed BOD reduction through the headworks

Table 9. Influent TSS Design Loading

	Annual Average	90 Day Minimum[a]	Maximum Month
2003 Loading, lbs/day	12,100	11,000	14,100
2004 Loading, lbs/day	11,400	9,300	13,900
2005 Loading, lbs/day	13,200	11,100	16,000
Average Loading, lbs/day	12,200	10,500	14,7007
Design Loading After Headworks, lbs/day	21,500	18,400	25,800
Design Concentration, mg/L	261	245	273
Additional 5% for Raw Influent Concentration, mg/L[b]	275	257	287
New Design Loading, lbs/day	22,500	19,3	27,000

[a] Based on the average of the lowest flow for a 90-day period
[b] 5% is the assumed TSS reduction through the headworks.

Figure 4Figure 5,Figure 6, and Figure 7summarize years 2003, 2004, and 2005 historical data for average flow and average BOD, TSS, and ammonia loadings.

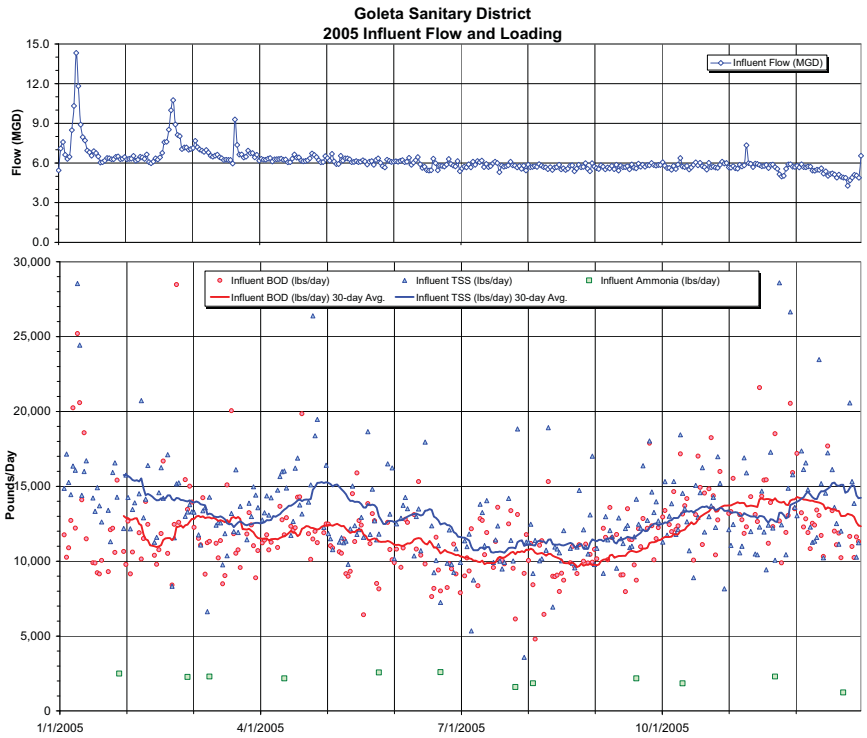

Goleta Sanitary District
2005 Influent Flow and Loading

2003

Month	Average Flow *MGD*	Average BOD *lbs/day*	Average TSS *lbs/day*	Average Ammonia *lbs/day*
January	5.48	11,419	11,854	1,604
February	5.48	11,709	12,183	1,655
March	5.73	11,081	12,624	1,577
April	6.02	12,862	13,941	2,395
May	6.00	12,805	12,624	1,870
June	5.67	12,406	12,060	2,169
July	5.55	10,767	10,972	1,523
August	5.44	10,714	11,356	2,041
September	5.28	11,337	11,324	1,760
October	5.55	11,643	13,015	1,450
November	5.27	10,634	12,304	1,714
December	5.02	10,770	11,030	2,059
Annual	**5.54**	**11,512**	**12,107**	**1,818**

2004

Month	Average Flow *MGD*	Average BOD *lbs/day*	Average TSS *lbs/day*	Average Ammonia *lbs/day*
January	5.18	11,749	12,744	175
February	5.52	11,726	12,778	161
March	5.26	11,164	11,862	156
April	5.38	11,535	12,058	156
May	5.24	11,347	13,294	154
June	4.77	10,241	10,534	156
July	4.65	9,355	9,333	142
August	4.38	8,781	9,232	138
September	4.95	10,734	9,684	146
October	5.26	11,331	10,540	144
November	5.65	12,189	12,411	167
December	5.65	10,952	12,770	147
Annual	**5.16**	**10,925**	**11,437**	**153**

2005

Month	Average Flow *MGD*	Average BOD *lbs/day*	Average TSS *lbs/day*	Average Ammonia *lbs/day*
January	7.26	12,883	15,756	2,785
February	7.09	12,664	13,999	2,247
March	6.78	11,811	12,604	2,295
April	6.30	12,311	15,282	2,197
May	6.15	11,324	12,669	2,493
June	5.94	10,400	11,840	2,664
July	5.82	10,604	11,019	1,607
August	5.68	9,822	11,453	1,838
September	5.73	11,402	12,369	2,225
October	5.80	13,714	13,363	1,861
November	5.75	14,118	13,830	2,327
December	5.31	12,388	14,207	1,345
Annual	**6.13**	**11,954**	**13,199**	**2,157**

* Data not available.

Figure 5. 2005 Influent Flow and Loading Data

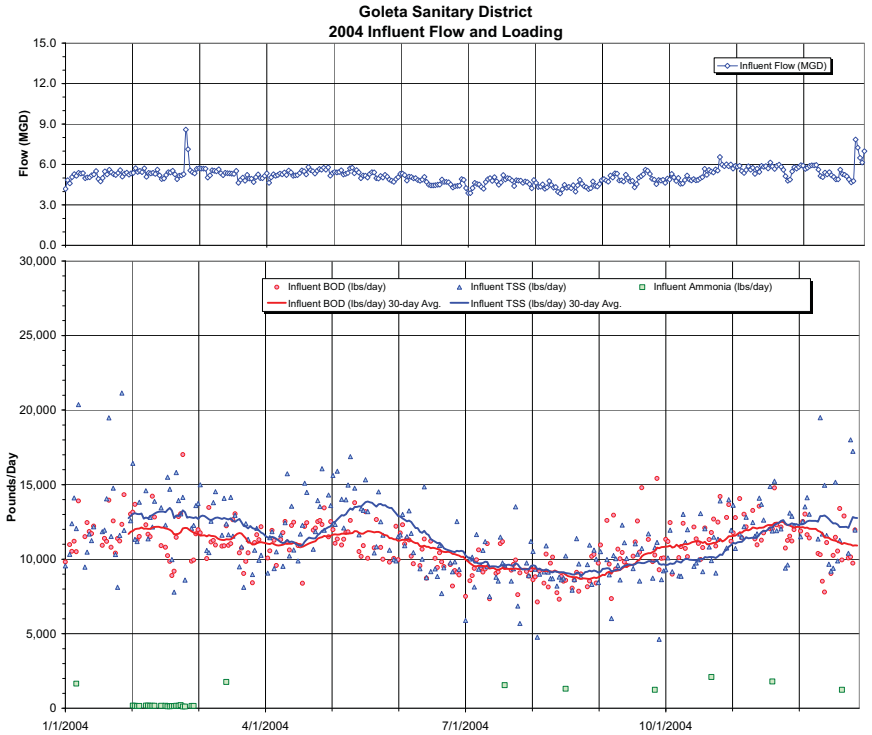

Goleta Sanitary District
2004 Influent Flow and Loading

2003

Month	Average Flow *MGD*	Average BOD *lbs/day*	Average TSS *lbs/day*	Average Ammonia *lbs/day*
January	5.48	11,419	11,854	1,604
February	5.48	11,709	12,183	1,655
March	5.73	11,081	12,624	1,577
April	6.02	12,862	13,941	2,395
May	6.00	12,805	12,624	1,870
June	5.67	12,406	12,060	2,169
July	5.55	10,767	10,972	1,523
August	5.44	10,714	11,356	2,041
September	5.28	11,337	11,324	1,760
October	5.55	11,643	13,015	1,450
November	5.27	10,634	12,304	1,714
December	5.02	10,770	11,030	2,059
Annual	**5.54**	**11,512**	**12,107**	**1,818**

2004

Month	Average Flow *MGD*	Average BOD *lbs/day*	Average TSS *lbs/day*	Average Ammonia *lbs/day*
January	5.18	11,749	12,744	175
February	5.52	11,726	12,778	161
March	5.26	11,164	11,862	156
April	5.38	11,535	12,058	156
May	5.24	11,347	13,294	154
June	4.77	10,241	10,534	156
July	4.65	9,355	9,333	142
August	4.38	8,781	9,232	138
September	4.95	10,734	9,684	146
October	5.26	11,331	10,540	144
November	5.65	12,189	12,411	167
December	5.65	10,952	12,770	147
Annual	**5.16**	**10,925**	**11,437**	**153**

2005

Month	Average Flow *MGD*	Average BOD *lbs/day*	Average TSS *lbs/day*	Average Ammonia *lbs/day*
January	7.26	12,883	15,756	2,785
February	7.09	12,664	13,999	2,247
March	6.78	11,811	12,604	2,295
April	6.30	12,311	15,282	2,197
May	6.15	11,324	12,669	2,493
June	5.94	10,400	11,840	2,664
July	5.82	10,604	11,019	1,607
August	5.68	9,822	11,453	1,838
September	5.73	11,402	12,369	2,225
October	5.80	13,714	13,363	1,861
November	5.75	14,118	13,830	2,327
December	5.31	12,388	14,207	1,345
Annual	**6.13**	**11,954**	**13,199**	**2,157**

* Data not available.

Figure 6. 2004 Influent Flow and Loading Data

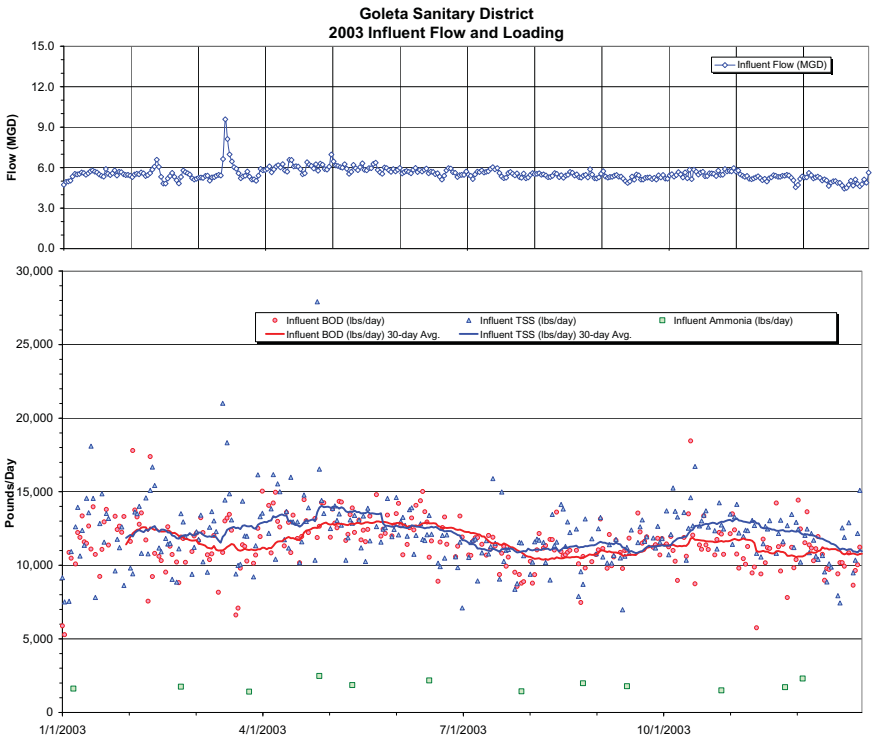

Goleta Sanitary District
2003 Influent Flow and Loading

2003

Month	Average Flow *MGD*	Average BOD *lbs/day*	Average TSS *lbs/day*	Average Ammonia *lbs/day*
January	5.48	11,419	11,854	1,604
February	5.48	11,709	12,183	1,655
March	5.73	11,081	12,624	1,577
April	6.02	12,862	13,941	2,395
May	6.00	12,805	12,624	1,870
June	5.67	12,406	12,060	2,169
July	5.55	10,767	10,972	1,523
August	5.44	10,714	11,356	2,041
September	5.28	11,337	11,324	1,760
October	5.55	11,643	13,015	1,450
November	5.27	10,634	12,304	1,714
December	5.02	10,770	11,030	2,059
Annual	**5.54**	**11,512**	**12,107**	**1,818**

2004

Month	Average Flow *MGD*	Average BOD *lbs/day*	Average TSS *lbs/day*	Average Ammonia *lbs/day*
January	5.18	11,749	12,744	175
February	5.52	11,726	12,778	161
March	5.26	11,164	11,862	156
April	5.38	11,535	12,058	156
May	5.24	11,347	13,294	154
June	4.77	10,241	10,534	156
July	4.65	9,355	9,333	142
August	4.38	8,781	9,232	138
September	4.95	10,734	9,684	146
October	5.26	11,331	10,540	144
November	5.65	12,189	12,411	167
December	5.65	10,952	12,770	147
Annual	**5.16**	**10,925**	**11,437**	**153**

2005

Month	Average Flow *MGD*	Average BOD *lbs/day*	Average TSS *lbs/day*	Average Ammonia *lbs/day*
January	7.26	12,883	15,756	2,785
February	7.09	12,664	13,999	2,247
March	6.78	11,811	12,604	2,295
April	6.30	12,311	15,282	2,197
May	6.15	11,324	12,669	2,493
June	5.94	10,400	11,840	2,664
July	5.82	10,604	11,019	1,607
August	5.68	9,822	11,453	1,838
September	5.73	11,402	12,369	2,225
October	5.80	13,714	13,363	1,861
November	5.75	14,118	13,830	2,327
December	5.31	12,388	14,207	1,345
Annual	**6.13**	**11,954**	**13,199**	**2,157**

* Data not available.

Figure 7. 2003 Influent Flow and Loading Data

3.1.3 Projected Solids Production

Primary solids production is based on current operational efficiency of the primary sedimentation tanks. Secondary solids production varies slightly depending on the secondary treatment process selected. As discussed later in Section 4 of this report, the difference between the alternative with lowest and highest solids production is less than 8 percent. In HDR's opinion, this variation is not large enough to dictate a significant revision of the solids handling system treatment capacity regardless of the selected liquid treatment alternative.

To size solids handling facilities, HDR used the MM loading and the secondary treatment process alternative generating the highest volume of solids. To calculate operations and maintenance costs, we used the annual average solids production.

3.1.4 Flow Equalization

Flow equalization allows wastewater treatment plants to accommodate wide variations in flow rate and organic mass loadings and use smaller liquid-handling structures and equipment after equalization. Flow equalization dampens diurnal variations during dry weather and flow variations caused by inflow and infiltration during rain events, while providing a relatively constant hydraulic and organic loading to downstream processes.

For the Goleta WWTP, the benefit of flow equalization is associated with avoiding peak instantaneous flows and loading to the secondary treatment system resulting from diurnal flow variations. The existing headworks and primary sedimentation tanks are sized for an ADWF of 9.0 MGD and a peak hour flow of 25.4 MGD. Therefore, the primary sedimentation tanks can handle the projected peak hourly flow rates. The

secondary treatment system will be designed to handle hydraulically the maximum day flow. HDR recommends that offline primary effluent equalization be implemented as part of the recommended project by using a portion of the volume now used by Sludge Stabilization Pond 2.

To calculate the required diurnal flow equalization volume for the annual average, maximum month, and maximum day design flows, HDR used the diurnal flow curve for the plant shown on Figure 8 and established ratios of hourly to daily average flow. The dry weather diurnal ratio curve shown on Figure 8 was derived using hourly flow data recorded during a four-day period in the summer of 2005. Hourly flows are presented as a fraction of the daily average flow. HDR assumed that this diurnal flow pattern will be applicable to the design annual average, maximum month, and maximum day flows.

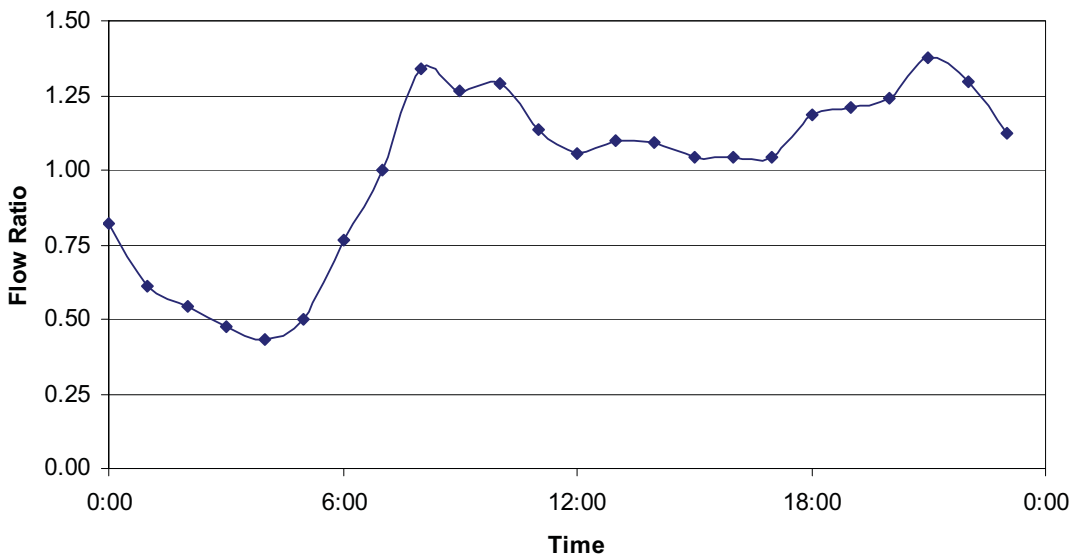

Figure 8. Dry Weather Diurnal Curve

The equalization volumes required to be stored diverted hourly flows higher than the daily average for annual average, maximum month, and maximum day flows are listed in Table 10. As noted, the ratios of hourly to daily average flows were taken from the diurnal curve presented in Figure 8. The total volume required for equalization is the sum of all positive values listed in the table. Each positive value represents the volume diverted during one hour to the equalization basin. Only flows above the average for that day are diverted. During low flow conditions, these flows will be pumped back to the secondary treatment system. The maximum flow rate allowed to go into the secondary treatment system is either an operator-selected set point or the running average of the last 24 hours of recorded plant influent flow.

As shown in Table 10, during the maximum day design flow of 19.08 MGD, a total of 2.27 million gallons (MG) will be diverted to equalization to ensure that the secondary treatment system does not receive instantaneous flows higher than 19.08 MG (or 13,250 gpm). The secondary treatment system and secondary effluent pumping station will be sized to handle hydraulically the design maximum day flow. HDR recommends a primary effluent equalization basin sized to store 3 MG to accommodate the calculated equalization volume plus a safety factor of 30 percent. The safety factor will account for

changes in flow patterns and unforeseen wet weather storm conditions. Sludge Stabilization Pond 2 has a surface area of 2.56 acres and 10 feet of side water depth, resulting in a storage volume of approximately 8.3 MG. On this basis, less than one-half of the existing pond volume is needed for the recommended equalization volume.

Table 10. Flow Equalization Basin Sizing

Hour	Ratio	9.00 MGD	9.84 MGD	11.29 MGD	19.08 MGD
		Volume of flow to be equalized per hour in MG			
0:00	0.82	-0.07	-0.07	-0.08	-0.14
1:00	0.61	-0.15	-0.16	-0.18	-0.31
2:00	0.54	-0.17	-0.19	-0.22	-0.36
3:00	0.47	-0.20	-0.22	-0.25	-0.42
4:00	0.43	-0.21	-0.23	-0.27	-0.45
5:00	0.50	-0.19	-0.21	-0.24	-0.40
6:00	0.77	-0.09	-0.09	-0.11	-0.18
7:00	1.00	0.00	0.00	0.00	0.00
8:00	1.34	0.13	0.14	0.16	0.27
9:00	1.27	0.10	0.11	0.13	0.21
10:00	1.29	0.11	0.12	0.14	0.23
11:00	1.14	0.05	0.06	0.06	0.11
12:00	1.06	0.02	0.02	0.03	0.05
13:00	1.10	0.04	0.04	0.05	0.08
14:00	1.10	0.04	0.04	0.04	0.08
15:00	1.05	0.02	0.02	0.02	0.04
16:00	1.05	0.02	0.02	0.02	0.04
17:00	1.05	0.02	0.02	0.02	0.04
18:00	1.18	0.07	0.08	0.09	0.15
19:00	1.21	0.08	0.09	0.10	0.17
20:00	1.24	0.09	0.10	0.11	0.19
21:00	1.38	0.14	0.15	0.18	0.30
22:00	1.29	0.11	0.12	0.14	0.23
23:00	1.13	0.05	0.05	0.06	0.10
Total volume to be equalized, MG		**1.07**	**1.17**	**1.34**	**2.27**
Total volume including a 30% Safety Factor		**1.39**	**1.52**	**1.74**	**2.95**

3.1.5 Plant Reliability Criteria

Wastewater treatment facilities systems should contain both design and operational features to ensure treatment reliability and ease of operation. Reliability features such as alarm systems, standby power supplies, treatment process and key mechanical equipment duplication, emergency diversion and bypass systems, monitoring devices, and automatic controllers capable of remote monitoring and operation will be incorporated into the final design.

3.1.6 Design Concepts and Constraints

One of the challenges of upgrading existing wastewater treatment facilities is the development of a construction sequence. The construction sequence must ensure that the recommended facilities can be constructed, started up, and tested without

compromising effluent quality or GSD's ability to meet recycled water delivery commitments. Final design plans and specifications will include a suggested construction sequence that should be reviewed and approved by the operations staff.

Other constraints that should be addressed in the recommended project plans and specifications include requirements for work hours, construction noise, odorous emissions, and possible construction equipment height restrictions due to the proximity to the Santa Barbara Municipal Airport.

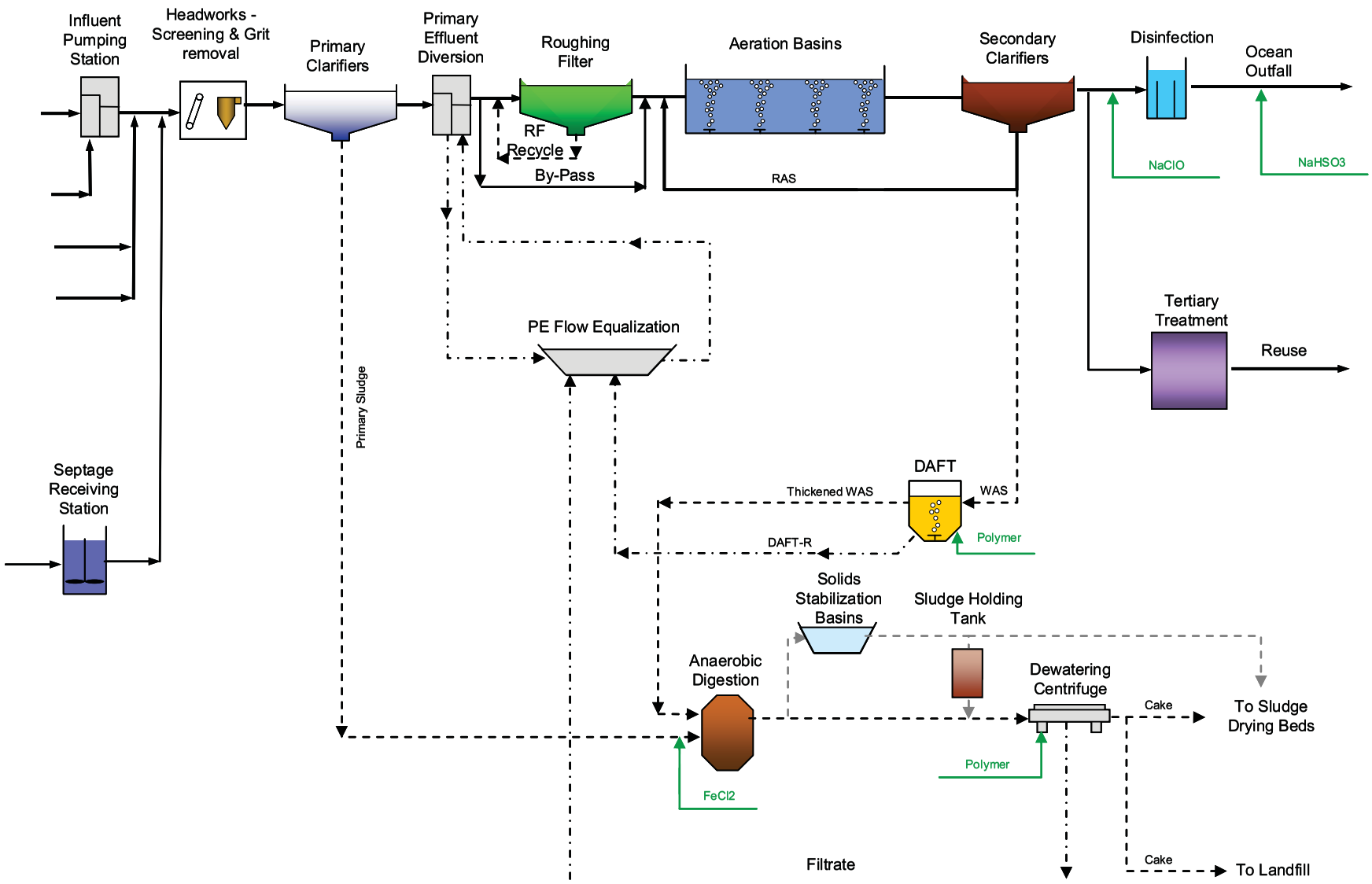

Figure 25. Recommended Alternative Process Schematic

7.0 Recommended Project

As discussed in Section 5 of this report, HDR evaluated eight liquid and six solids treatment alternatives. The initial evaluation of the eight liquid and six solids treatment alternatives originally proposed by HDR were reduced to four liquid and four solids viable alternatives. All alternatives were evaluated in terms of capital and operation and maintenance costs using life-cycle cost analyses. A set of non-economic evaluation criteria was also developed. The liquid treatment alternative with the highest overall score (economic and non-economic) is Alternative 2B. The solids treatment alternative with the highest economic and non-economic score is Alternative 3B Dryer/Pelletizer Regional Solids. Even though this alternative has the highest ranking, its implementation requires a revision of GSD's policies and commitments of other nearby sanitation agencies to implement a regional solution to the ever-volatile biosolids reuse and disposal challenges. With that in mind, HDR recommends a phased approach to the overall project.

The first is the Basic Project, which involves implementation of liquid treatment Alternative 2B and solids treatment Alternative 1 Base Alternative. These alternatives, described in detail in this section, represent a significant revision to the liquid treatment processes. The recommended solids treatment alternative continues using the existing treatment process with certain modifications. Most of the Basic Project implementation plan involves facilities to bring the treatment plant in compliance with the settlement agreement between GSD and the RWQCB.

There are other capacity, reliability, and economics factors that will trigger implementation of the Supplemental Improvements and Biosolids Pelletizer. The Supplemental Improvements involves the addition of a fourth digester, a cogeneration system, upgrades to the treatment plant headworks, and a new Locker and Shower Building. Implementation of the Biosolids Pelletizer described as Alternative 3B Dryer/Pelletizer for GSD Solids, is highly dependent on the economics associated with biosolids disposal cost and the potential for reuse of the biosolids locally. If the cost to dispose the biosolids off-site is higher than the cost to pelletize and if there is a market for the product for local reuse, then most likely GSD would implement the Biosolids Pelletizer. A change to GSD policy and the potential participation of other agencies will have a significant impact on the decision-making process to proceed with this part of the overall project.

Figure 38 shows a summary of improvements. Table 29 through Table 34 present the design basis for the recommended project.

Replace with 11 by 17 figure

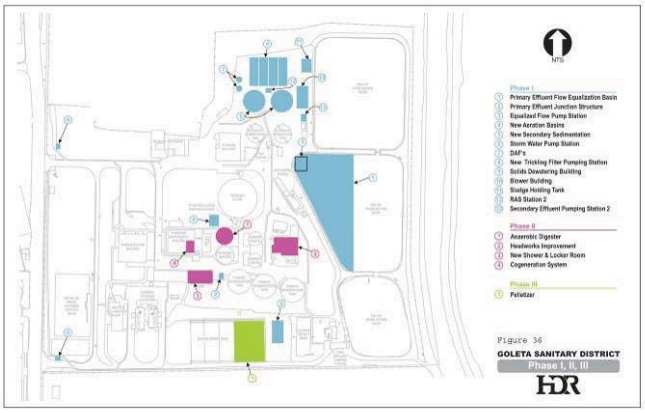

Figure 38. Summary of Improvements Project Site Plan

Table 29. Influent and Design Flow Conditions

Flow Condition	Value
Average Dry Weather Flow (ADWF)	9.00 MGD
Annual Average Daily Flow (AADF)	9.84 MGD
Maximum Month Flow (MMF)	11.29 MGD
Peak Day Flow (PDF)	19.08 MGD
Peak Hour Flow (PHF)	29.50 MGD
Design Temperature	20°C

Table 30. Influent Wastewater Composition

	AADF 9.84 MGD	Maximum Month 11.29 MGD
Biochemical Oxygen Demand		
Concentration	258 mg/L	260 mg/L
Loading	21,200 lbs/day	24,500 lbs/day
Suspended Solids		
Concentration	275 mg/L	287 mg/L
Loading	22,500 lbs/day	27,000 lbs/day
Grease and Oil		
Concentration	50 mg/L	50 mg/L
Loading	4,100 lbs/day	4,700 lbs/day

Table 31. Preliminary Treatment, Primary Treatment, and Flow Equalization

	Value
Mechanical Screens	
Number	2
Capacity, each, MGD	15 MGD
Opening Size	1/4”
Manual Screen	
Number	1
Capacity, each, MGD	15 MGD
Aerated Grit Removal Tanks	
Number	2 ft
Length, each	34 ft
Width, each	18 ft
Depth, each	13 ft
Detention Time at AADF	17.4 minutes
Detention Time at Peak Hour	5.8 minutes
Primary Sedimentation Tanks	
Number of Existing Units	3
Diameter, ft	75 ft
Side Water Depth, ft	10 ft
Average Overflow Rate	742 gal/sq ft-day
Peak Overflow Rate	2226 gal/sq ft-day

	Value
Expected Removal Efficiency, BOD	0.39
Expected Removal Efficiency, TSS	0.59
Flow Equalization	
Volume Required	3.0 mg
Required Pumping Capacity	5,000 gpm
Number of Pumps	2
Total Dynamic Head	32 ft

Table 32. Secondary Treatment

	AADF 9.84 MGD	Maximum Month 11.29 MGD
Biochemical Oxygen Demand		
Total Concentration	157 mg/L	159 mg/L
Total Quantity	12,915 lbs/day	14,934 lbs/day
Carbonaceous BOD	126 mg/L	127 mg/L
Carbonaceous BOD	10,332 lbs/day	11,947 lbs/day
Carbonaceous Filtered BOD	57 mg/L	57 mg/L
Carbonaceous Filtered BOD	4,650 lbs/day	5,376 lbs/day
Suspended Solids		
Concentration	113 mg/L	118 mg/L
Quantity	9,253 lbs/day	11,080 lbs/day
Roughing Filter		
Flow	9.84 MGD	11.29 MGD
Number of Units (existing modified)	1	1
Diameter	130 ft	130 ft
Depth of Media	15 ft	15 ft
Type of Media	Plastic Cross Flow	Plastic Cross Flow
Surface Area	13,273 sq ft	13,273 sq ft
Volume of Media	199,098 cu ft	199,098 cu ft
Specific Surface Area of Media	30 sf ft/cu ft	30 sq ft/cu ft
Organic Loading, lbs BOD/1000	64.87 cu ft/day	75.01 cu ft/day
Hydraulic Loading	0.46 gpm/sq ft	0.49 gpm/sq ft
Circulated Flow	19.68 MGD	19.68 MGD
Number of Duty Circulation Pumps	2	2
Capacity (each)	6,900 gpm	6,900 gpm
Total Head	35 ft	35 ft
Activated Sludge Tanks		
Number of Aeration Trains		4
Basin Volume Total		1.8 mg
Surface Area		15,040 sq ft
Side Water Depth		16 ft
HRT		3.8 hrs
BOD Only MLSS		900 mg/L
BOD Only SRT		1.5 days
BOD Only OUR		55 Mg/L/hr
BOD Only Air Required		3900 cfm

	AADF 9.84 MGD	Maximum Month 11.29 MGD
BOD Yield, lbs VSS/lbs BOD		0.5 lbs/lbs
Nitrification MLSS		2,400 mg/L
Nitrification SRT		4 days
Nitrification OUR		55 mg/L/hr
Nitrification Air Required		8,900 cfm
Nitrification Yield, lbs VSS/lbs BOD		0.65 lbs/lbs
Blower Capacity, each		4,450 cfm
Design Pressure		8 psi
Number of Blowers		3
Secondary Clarifiers (existing)		
Number Sedimentation Tanks	2	2
Diameter	60 ft	60 ft
Average Side Water Depth	16 ft	16 ft
Tank Surface Area	2,827 sq ft	2,827 sq ft
Flow Total	3.84 MGD	4.41 MGD
Overflow Rates	679 gpd/sq ft	779 gpd/sq ft
Freeboard	2.2 ft	2.2 ft
Secondary Clarifiers (new)		
Number Sedimentation Tanks	2	2
Diameter	75 ft	75 ft
Average Side Water Depth	16 ft	16 ft
Tank Surface Area	4,418 sq ft	4,418
Flow	6.00 MGD	6.89 MGD
Overflow Rates	679 gpd/sq ft	779 gpd/sq ft
Freeboard	2.2 ft	2.2 ft
Secondary Effluent Pump Station (existing)		
Number of Pumps	2	2
Capacity	4,100 gpm	4,100 gpm
Total Head	25	25
Secondary Effluent Pump Station (new)		
Number of Pumps	2	2
Capacity	9,236 gpm	9,236 gpm
Total Head	25 ft	25 ft
WAS Thickening		
WAS Flow, gpm	100 gpm	122 gpm
Number of WAS Pumps	2	2
Capacity	150 gpm	150 gpm
Total Head	40 ft	40 ft
Number of DAFTs	2	2
Diameter	25 ft	25 ft
Side Water Depth	12 ft	12 ft

Table 33. Effluent Disinfection

	AADF 9.84 MGD	PEAK DAY 19.08 MGD
Chlorine Contact Tank		
Number of Trains	2	2
Passes per Train	3	3
Basin Length	102 ft	102 ft
Channel Width	6 ft	6 ft
Side Water Depth	10 ft	10 ft
Total Volume	36,720 cu ft	36,720 cu ft
HRT	40 min	21 min
Modal Contact Time	36 min	19 min
Expected Chlorine Demand	5 mg/L	5 mg/L
Effluent Quality		
Biochemical Oxygen Demand Conc.	15 mg/L	15 mg/L
Suspended Solids Conc.	15 mg/L	15 mg/L

Table 34. Solids Treatment and Disposal

	AADF 9.84 MGD	Maximum Month 11.29 MGD
Solids Production		
Primary Solids	13,315	15,944
Secondary Solids	6,511	7,470
Total Solids	19,826	23,414
Average Sludge Solids Content	4%	4%
Sludge Volume	7,945 cu ft per day	9,383 cu ft per day
Percent VSS	0.80	0.80
VSS Loading	15,861 lbs/day	18,731 lbs/day
Anaerobic Digesters		
Digester 1		
Diameter	43 ft	43 ft
Side Water Depth	24.5 ft	24.5 ft
Volume	35,600 cu ft	35,600 cu ft
Digester 2		
Diameter	45 ft	45 ft
Side Water Depth	24.5 ft	24.5 ft
Volume	39,000 cu ft	39,000 cu ft
Digester 3		
Diameter	55 ft	55 ft
Side Water Depth	29 ft	29 ft
Volume	68,900 cu ft	68,900 cu ft
Digester 4		
Diameter	55 ft	55 ft
Side Water Depth	29 ft	29 ft
Volume	68,900 cu ft	68,900 cu ft
Total Digester Loading	0.09 lbs VSS/cu ft	0.11 lbs VSS/cu ft
Total Volatile Solids Reduction	0.8	0.8

	AADF 9.84 MGD	Maximum Month 11.29 MGD
Total Biogas Production VSS destroyed	15 cu ft/lbs	15 cu ft/lbs
Sludge Drying Beds		
Number	5	5
Width, each	50 ft	50 ft
Length (average)	175 ft	175 ft

7.1 Recommended Liquid Treatment Alternative 2B One Roughing Filter followed by Large Activated Sludge

The recommended secondary treatment system consists of a roughing filter with its associated recirculation pumping station, a gravity bypass, an activated sludge system with a total of four trains and its associated blower building and aeration system, four secondary sedimentation tanks, two RAS pumping stations, and two secondary effluent pumping stations each with a force main.

7.1.1 Roughing Filter

The secondary treatment system starts with a roughing filter operated at high organic loading to partially remove soluble BOD from equalized primary effluent. The roughing filter will be constructed as an upgrade of the existing, using the same foundation and underdrain structure and increasing the wall height to accommodate a total media depth of 15 feet. It is assumed that the existing 6 feet of media, installed in 1987, will break during construction and new high-rate cross-flow plastic media will be installed. The roughing filter will have a total media volume of approximately 200,000 cubic feet (cf). The filter is designed to handle a maximum month organic loading of 76 lb BOD/1000 cfd. This is likely the highest loading the filter can handle without an odor control system. The proposed project does not include TF odor control. As a reference, the existing filter is currently loaded at an annual average of approximately 74 lb BOD/1000 cfd.

To maintain a constant wetting rate, a 14.7-MGD recirculation pumping station will be built adjacent to the roughing filter. The station capacity is 1.5 times the design AADF. The existing recirculation pumping station will be abandoned, since its capacity is 5 MGD, and a retrofit would be more costly than building a new one. A new motor-driven distributor arm, column, and recirculation piping are also required to replace the existing.

Primary effluent enters the recirculation pumping station flowing by gravity from the primary sedimentation tanks and also pumped from the equalization pond. Recirculation pumps feed the roughing filter through the distributor arm. Filter effluent collected in the filter underdrain returns by gravity to the pumping station. A portion of the roughing filter effluent overflows an internal weir in the pumping station and flows by gravity to the activated sludge system. A bypass structure will be provided to allow primary effluent to flow by gravity to the AS system if the TF is taken off-line.

7.1.2 Activated Sludge System

The activated sludge tank will have a total volume of 1.8 MG. The 16-foot-deep tank will be located adjacent to the existing solids contact channel. The tank will have four separate trains. This reduces treatment capacity loss when one is off-line for maintenance. The system is sized to provide full nitrification operating with 4 days of solids retention time (SRT) and a mixed liquor suspended solids (MLSS) concentration

of 2400 mg/L at an average temperature of 20 degrees Celsius. Operating in this mode demands approximately 8,000 square cubit feet per minute (scfm) of air to meet carbonaceous BOD and nitrification demand at maximum month flows.

In order to meet the current effluent ammonia-nitrogen limit of 74 mg/L six-month median, the AS system would operate with less than 1.5 days of SRT, with an MLSS of 900 mg/L. This would reduce oxygen demand by approximately 50 percent. The aeration system would be designed to handle nitrification air requirements but equipped initially for carbonaceous BOD removal only. A new blower building will be constructed, sized to house three 250-HP multiple-stage centrifugal blowers, two duty and one standby. Two blowers will be installed initially with the ability to add a third, if needed to meet future ammonia requirements. The four activated sludge trains will be equipped with fine bubble air diffusers and automatic air flow control valves operating based on dissolved oxygen. The diffuser system will be sized to supply maximum day air nitrification requirements.

The system will use four secondary sedimentation tanks. Two are the existing 60-foot-diameter tanks and two will be new 75-foot-diameter tanks. A mixed liquor flow distribution system will be provided. The existing tanks will operate with the existing return activated sludge (RAS) pumping station. Waste activated sludge (WAS) pumps will be installed in the RAS station. A new RAS station will be built for the new clarifiers. The RAS station will also include WAS pumps. Both RAS/WAS stations will be equipped with variable speed pumps with adequate redundancy. RAS will be pumped to a mixed liquor influent channel common to the four AS trains, where it will mix with roughing filter effluent. WAS will be pumped to two DAFTs. DAFT undernate will be pumped to the equalization pond. Thickened WAS will be pumped to the digesters.

7.1.3 Secondary Effluent Pumping

Secondary effluent will be pumped to the existing chlorine contact chamber (CCC). The existing secondary effluent pumping station has 5.9 MGD capacity. The pumping station has a force main connecting to the CCC. A control valve diverts flow to the tertiary treatment system before entering the CCC. A new 13.2-MGD pumping station will be built adjacent to the existing; together they will be able to pump the maximum day design flow of 19.1 MGD. The new pumping station will have three pumps, two duty and one standby. The wet wells of both pumping stations will be interconnected through an isolation valve. The station will have a force main parallel to the existing. A flow diversion valve will be installed in the vicinity of the CCC to send flow to the tertiary plant.

7.1.4 Secondary Effluent Disinfection

The recommended disinfection alternative is to continue using the CCC. The 275,000-gallon CCC has two trains each with three passes. The tank treats an average of 6 MGD with an approximate modal contact time of 60 minutes. The chlorination system uses sodium hypochlorite fed by a flow-paced chemical pump. Current average chlorine dosage is 34 mg/L and chlorine residual is 9 mg/L. The high chlorine demand results from disinfecting a blend of primary and secondary effluent with high turbidity and colloidal and suspended solids. This residual provides an estimated CT-value of 540 mg-min/L, sufficient to produce effluent with an average of 50 MPN/100mL mL total coliform, 4 MPN/100 mL fecal coliform, and 3 MPN/100 mL enterococcus.

It is expected that to maintain similar effluent bacterial counts disinfecting secondary effluent, the required CT will be approximately 400 mg-min/L. At the annual average flow

of 9.84 MGD, this would require 11 mg/L chlorine residual concentration and a dose of approximately 16 mg/L. The chlorine feed system has sufficient capacity to deliver the dosage required for the maximum day flow.

CCC effluent is dechlorinated to less than 0.1 mg/L using sodium bisulfite dosed automatically into a rapid mixed chamber. The bisulfite feed system has capacity to supply the maximum day demand.

7.1.5 Effluent Pumping Station

The effluent station has three 14.8-MGD pumps, two duty and one standby. Pumps are used at high flows during high tide. The station has adequate capacity to pump the maximum day flow.

7.2 Recommended Solids Treatment Alternative 1 Base Alternative

7.2.1 Dissolved Air Flotation Tanks (DAFTs)

The base alternative would abandon the current practice of co-thickening primary and secondary sludge in the primary sedimentation tanks. This, however, would require addition of two 25-foot-diameter DAFTs to thicken the WAS generated by the secondary treatment facilities prior to conveyance to the anaerobic digesters. The DAFTs will be covered and ventilated to an odor control unit.

7.2.2 DAF Thickened Waste Activated Sludge (TWAS) Pumping Station

A new pumping station will be located next to the DAFTs. HDR anticipate that each DAFT will have a dedicated unit, and the third pumping unit will serve as standby for the other two units.

7.2.3 Anaerobic Digestion

For added solids processing reliability, HDR is recommending a fourth anaerobic digester with a 55-foot-diameter and associated equipment to provide hydraulic mixing and digester gas recovery and reuse. Most likely, HDR will recommend a fixed-in-place digester cover rather than using a floating cover similar to the ones used by the existing digesters.

7.2.4 Digested Sludge Pumping Station

A new sludge pumping station will be provided to feed digested sludge from the digesters to the centrifuge. The digested sludge pumping station will have five pumps, four duty dedicated to each digester and one standby. Digested sludge will be sent by gravity to the solids stabilization ponds if needed during an emergency.

7.2.5 Dewatering Centrifuge

The new centrifuge will be housed in an enclosed and ventilated structure located in the vicinity of the existing sludge drying beds. The facility will have a solids load-out bay to facilitate dewatering solids loading into containers for transportation off-site for disposal and/or reuse. The existing practice of dredging the solids stabilization ponds and dewatering the sludge using the baker tank and a rebuilt belt filter press will be

discontinued. To facilitate the dewatering process, the design will include liquid polymer addition.

The final design of this facility will include features to facilitate implementation of Alternatives 3A and 3B. The structure housing the centrifuge will be expandable to accommodate a second centrifuge and will be ventilated to an odor control system.

7.2.6 Sludge Holding Tank

The upgraded solids dewatering system will include a 20,000-gallon concrete sludge holding tank. This tank would replace the existing baker tank used to feed the existing belt press. The tank will receive sludge from the existing dredge and will have two pumps, one duty and one standby, to convey stabilized solids to the sludge drying beds.

7.2.7 Co-Generation System

Even though the economic analysis included a co-generation system, HDR recommend that this portion of the project be delayed pending the economics of implementing Alternatives 3A and 3B. An alternative approach is for GSD to enter into an agreement with a Design-Build-Operate independent contractor to operate a new co-generation facility and sell power back to GSD at a discount rate and that at the end of a pre-determined period, GSD will become the Owner and Operator of the facility.

7.2.8 Solids Stabilization Ponds

The capacity of the solids stabilization ponds will be reduced by 3.0 million gallons. This volume will be used to equalize primary effluent.

7.3 Recommended Common Improvements

Several treatment plant upgrades were identified during the facility physical condition and performance assessment conducted by HDR at the onset of the project. These improvements include are described below.

7.3.1 Headworks Area

Replace the existing ¾-inch mechanically cleaned bar screens with ¼-inch opening mechanically cleaned screens. The smaller opening screens will capture plastics and other non-biodegradable material observed in the solids stabilization basins and sludge drying beds. The existing belt conveyor used to transport the screenings collected by the bar screens and grit removed by the grit washer/separator is corroded and has reached the end of its useful life.

Currently, the screenings are not washed or compacted. HDR are recommending that the treatment plant upgrades include a screenings washer and compactor. This will reduce the labor required to drain, cover, and clean the screening and grit containers used to transport the screenings and grit for off-site disposal. An added benefit is that the material transported off-site has less water and is easier to handle.

7.3.2 Flow Equalization

HDR recommends constructing a 3-MG primary effluent equalization basin sectioning a portion of Solids Stabilization Basin 2. The new basin will be concrete lined and provided with a pumping station to convey equalized primary effluent to the secondary treatment

process. The anticipated mode of operation will require that the basin be emptied daily. The benefit of the equalization basin is that the secondary treatment facilities will be sized for average flow and that the existing CCC will not have to be modified as part of the upgrades to produce secondary effluent.

7.3.3 Miscellaneous Structural Repairs

Some of the existing facilities have been in operation since 1986. Proximity to the ocean and the type of processes at wastewater treatment plants are very conducive to concrete and metal corrosion. Protective coatings need to be re-established throughout the entire facility for both concrete and metal structures. In addition, there are numerous areas with exposed piping and metalwork that must be replaced.

7.3.4 Space Utilization

HDR recommends that the existing Shower and Locker Building be replaced with a new larger facility sized to accommodate the wastewater treatment facility and collection system staff. The existing building will be demolished to make space for the new building.

In addition to evaluating the suitability of the existing Shower and Locker Building, HDR evaluated two alternatives to improve public access to the Administration Building and laboratory space utilization. The recommended improvement to facilitate public access to the Administration Building is to relocate the public access entrance from the east side to the north east corner of the building. Recommended improvements to the Laboratory have already been implemented by GSD staff.

7.3.5 Recommended Cost by Project Packages

HDR segregated the recommended project components into three improvement packages: the Basic Project, Supplemental Improvements, and the Pelletizer. The Basic Project includes all improvements necessary to treat 100 percent of the flow to full secondary level. The Supplemental Improvements contain additional improvements and structures that go beyond the basic needs required for full secondary treatment. The biosolids Pelletizer consists of a potential solids treatment process that the GSD may build at a future date. The project cost by packages is summarized in Table 35.

The project cost summarized in the Table 35 has been updated to reflect unit costs for the second quarter of 2008. The updated cost summary for the Basic Project plus Supplemental Improvements to the Headworks and a new Shower and Locker Room Building is shown in Table 36.

Table 36 costs have been escalated to the project's midpoint of construction of May 2012. The escalation factors used are higher than those in Table 35 to reflect current economic trends impacting the cost of labor and materials. **(The escalation factors are detailed in Table 37.**

Table 35. Recommended Project Cost by Packages

	Basic Project	Supplemental Improvements	Pelletizer
Site Work	$1,306,261	$340,063	$150,000
Concrete	$3,208,700	$393,618	$333,600
Masonry	$150,000	$680,000	$0
Metals	$37,500	$0	$450,000
Finishes	$0	$37,500	$0
Equipment	$5,893,150	$2,540,500	$6,250,000
Mechanical	$1,185,837	$147,000	$30,000
Electrical	$1,303,452	$203,240	$500,000
Instrumentation/Controls	$489,315	$254,050	$625,000
General Conditions	$9,998,733	$3,385,381	$6,142,192
Construction Subtotal	**$23,572,948**	**$7,981,353**	**$14,480,792**
Engineering, Legal and Admin.(35%)	$8,250,532	$2,793,473	$5,068,277
Project Total (2007$)	**$31,820,000**	**$10,770,000**	**$19,550,000**
Escalation to Midpoint (3% to 2012)	$5,070,000	$1,720,000	$3,110,000
Project Cost	**$36,890,000**	**$12,490,000**	**$22,660,000**

Table 36. Recommended Project Cost

Cost Item	Recommended Project Cost 2nd QTR 2007 Cost Basis	Recommended Project Cost 2nd QTR 2008 Cost Basis
Common Facilities (Including Headworks)	$4,942,597	$6,080,396
Recommended Alternative (2B)	$7,820,450	$9,983,344
Dewatering	$1,686,605	$1,989,165
Admin and Shower	$899,400	$953,800
Construction Subtotal (Direct Costs)	$15,349,052	$19,006,705
Contingency (30%)	$4,604,715	$5,702,011
Subtotal 1	$19,953,767	$24,708,716
Mobilization and Demobilization (6% of Subtotal 1 Increased to 9% for 2008)	$1,197,226	$2,223,784
Subtotal 2	$21,150,993	$26,932,500
General Conditions (10% of Subtotal 2)	$2,115,099	$2,693,250
Subtotal 3	$23,266,092	$29,625,750
Contractor Profit (8% of Subtotal 3)	$1,861,287	$2,370,060
Subtotal 4	$25,127,380	$31,995,810
Bonds (2% of Subtotal 4)	$502,548	$639,916
Subtotal 5	$25,629,927	$32,635,727
Insurance and Administration (4% of Subtotal 5)	$1,025,197	$1,305,429
Subtotal 6	$26,655,125	$33,941,156
Engineering, Administration and Legal 35%	$9,329,294	$6,788,231
Subtotal 7	$35,984,418	$40,729,387
Escalation 3% per year for 2007 and 5.57% for 2008	$5,732,606	$10,316,963
Total Project Costs	$41,717,024	$51,046,350

Table 37. Recommended Project Cost Detailed Escalation

	Mark-Ups	HDR 2nd Qtr 2007	Mark-Ups	HDR 2nd Qtr 2008
Common Facilities		$4,942,597		$6,080,396
Recommended Alternative (2B)		$7,820,450		$9,983,344
Dewatering		$1,686,605		$1,989,165
Admin and Shower		$899,400		$953,800
Construction Subtotal (Direct Costs)		$15,349,052		$19,006,705
Contingency (30%)	**30%**	$4,604,715	**30%**	$5,702,011
Subtotal 1		$19,953,767		$24,708,716
Mobilization and Demobiliztion (6% of Subtotal 1)	**6%**	$1,197,226	**9%**	$2,223,784
Subtotal 2		$21,150,993		$26,932,500
General Conditions (10% of Subtotal 2)	**10%**	$2,115,099	**10%**	$2,693,250
Subtotal 3		$23,266,092		$29,625,750
Contractor Profit (8% of Subtotal 3)	**8%**	$1,861,287	**8%**	$2,370,060
Subtotal 4		$25,127,380		$31,995,810
Bonds (2% of Subtotal 4)	**2%**	$502,548	**2%**	$639,916
Subtotal 5		$25,629,927		$32,635,727
Insurance and Administration (4% of Subtotal 5)	**4%**	$1,025,197	**4%**	$1,305,429
Subtotal 6		$26,655,125		$33,941,156
Engineering, Administration and Legal 35%	**35%**	$9,329,294	**20%**	$6,788,231
Subtotal 7		$35,984,418		$40,729,387
Escalation 3% per year 0.159308	**15.9308%**	$5,732,606	**25.3305%**	$10,316,963
Total Project Costs		$41,717,024		$51,046,350

Estimate Class Based on AACE International Recommended Practice No. 17R-97 (COST ESTIMATE CLASSIFICATION SYSTEM)	**Class 4 - 1% to 15% Project Definition with Accuracy Range Index of 4 (Recommend using +40% to -20% Range of accuracy)**

Range of Engineer's OPCC Total Project Cost Accuracy (+40%)		**40.00%**	**$ 71,464,890.17**
Range of Engineer's OPCC Total Project Cost Accuracy (-20%)		**-20.00%**	**$ 40,837,080.10**

Escalation Based on RS Means Trends Methodology using 5 Years to develop the Average Annual Change Percentage for (Santa Barbara, CA)	
Estimate Data Date 04/01/2008 (Most recent RS Means Data Update)	**4/1/2008**
RS Means CCI 2nd Quarter 2003 (Years before Present CCI date in next row)	**139.8**
RS Means CCI 2nd Quarter 2008 (Most recent CCI avaiable)	**183.3**
Bid Date	**4/1/2011**
Notice to Proceed	**6/1/2011**
Estimated Construction Time	**730**
Scheduled Final Completion Date	**5/31/2013**
Scheduled Mid Point of Construction Date	**5/31/2012**
Average Annual Change Percentage for Period between the CCI dates	**5.57%**
Escalation from Estimate Data Date to Mid Point of Construction	**25.33%**

Preliminary Project Schedule
Goleta Sanitary District

ID	Task Name	Duration	Start
1	Environmental Documentation	5 mons	Fri 2/1/08
2	Draft Facilities Planning Study QA/QC Review	1 mon	Tue 1/1/08
3	Deliver Final Draft Facility Planning Study	0 days	Mon 2/4/08
4	Facilities Planning Study Member Agency Review	2 mons	Mon 3/3/08
5	Incorporate Member Agency Review Comments	7 days	Mon 4/28/08
6	Submittal to Regional Quality Control Board	0 days	Thu 6/5/08
7	Design Consultant Selection	3 mons	Tue 7/1/08
8	Prepare Alternative Plans and Specifications	18 mons	Mon 2/2/09
9	Bid Period/Contractor Selection	4 mons	Mon 6/21/10
10	Notice of Award	2 mons	Mon 10/11/10
11	Construction (NTP)	36 mons	Mon 12/6/10
12	Start-up and Testing	6 mons	Mon 9/9/13
13	RWQCB Final Compliance Date	0 days	Fri 11/14/14

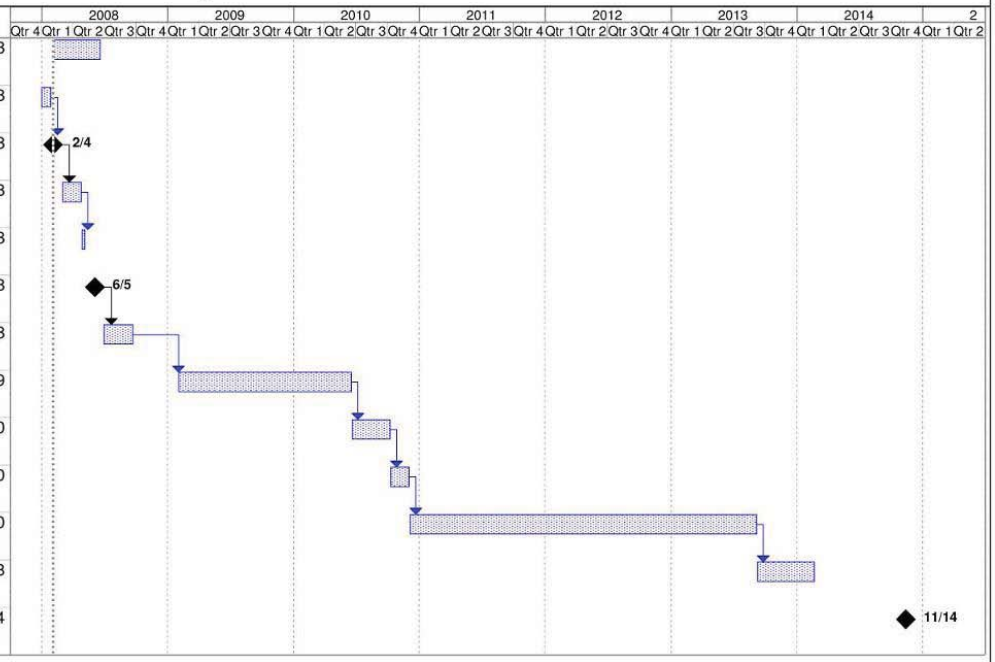

Figure 39. Preliminary Project Schedule

April 28, 2009

Ernestine de Soto
Gilbert Unzueta
Patrick Tumamait
Julie Lynn Tumamait
Adelina Alva-Padilla
Beverly Salazar Folkes
Randy Guzman-Folkes
Diane Napoleone
Frank Arredondo
Charles Parra
Carol Pulido
Puilulaw Khus
Melissa A. Parra-Hernandez
Stephen William Miller
Owl Clan, Dr. Kote and Lin A-lul'Koy Lotah
John Ruiz, Coastal Band of the Chumash Nation
Vincent Armenta, Santa Inez Band of Mission Indians, Chairperson
Joe Talaugon, Santa Inez Tribal Elders Council, Chairman
Janet Garcia, Chair, Coastal Band of the Chumash Nation
Sam Cohen, Santa Inez Band of Mission Indians, Tribal Administrator
Diane Meester, Santa Barbara County Planning & Development Department
Mark Walter, Santa Barbara County Planning & Development Department
Madeline Hirn, State Water Resources Control Board

Subject: Wastewater Treatment Plant Upgrading Project Final Report Distribution for Extended Phase I Archaeological Investigation

To Whom It May Concern:

The Goleta Sanitary District (District) is interested in receiving your comments regarding the attached report titled, *Extended Phase I Archaeological Investigation for the Goleta Sanitary District Wastewater Treatment Plant Upgrading Project*. Also attached, for your information is the plant site layout and a project description.

The District is mandated to upgrade its wastewater treatment plant by November 2014 through a settlement agreement with the Central Coast Regional Water Quality Control Board (RWQCB). The recorded archaeological site, CA-SBA-46, is located within the boundaries of the wastewater treatment plant facilities. The District has retained Dudek as its archaeological consultant to guide it through the CEQA and Native American consultation process. The Extended Phase I Archaeological Evaluation Draft Work Plan dated January 23, 2009 was mailed to all of the interested parties listed above and all were invited to attend an informational meeting and site visit which was held on February 3, 2009. The District has also been in consultation with the State Water Quality Control Board Cultural Resources Officer, who reviewed and approved the work plan.

The Extended Phase I archaeological investigation used geoprobes to explore an area for new construction located in the central area of the treatment facilities identified as either having the potential to contain culturally important artifacts or having no or minimal previous excavation work. The excavations identified some areas with the potential to contain artifacts of cultural significance. The attached report summarizes the results of this study and makes a series of recommendations to minimize impacts construction could have on these areas within CA-SBA-46.

In response to these recommendations, the District has been successful in refining the project design to relocate structures originally placed in sensitive areas to areas with no or very little cultural materials. In addition, as shown in the attached revised treatment plant layout, a large portion of the new facility will be built on the northern most portion of the site in an area that has been identified as being outside of the original boundary of Mescalitan Island, (document, *SBA-46, Test Program, Goleta Sanitary District/Brown & Caldwell, Vol 1).*

Substantial lengths of proposed connecting pipelines will also be located in areas east of the original Mescalitan Island boundary, or in areas where the landform was historically graded and removed of all archaeological soils. The District was successful in refining the proposed pipeline corridors to minimize impacts to areas with the potential to contain culturally important artifacts, while maintaining the project's wastewater treatment plant upgrade objectives.

We are requesting that you review the attached documents and are interested in receiving your comments. A meeting to discuss this project is scheduled for Wednesday, May 13, 2009 at 10:00 a.m., at the Goleta Sanitary District, One William Moffett Place, Goleta, CA 93117. We will also accept any written comments at the above address.

Please let us know if you can attend by contacting Kathleen Werner at 805-967-4519 or by email at kwerner@goletasanitary.org.

Thank you for your consideration.

Sincerely,

GOLETA SANITARY DISTRICT

Kamil S. Azoury
General Manager/District Engineer

VALUE ENGINEERING STUDY

Goleta Wastewater Treatment Plant Improvements

Goleta, California

Final Report

May 2009

JLMVE ADDING VALUE TO THE SOLUTION

BLACK & VEATCH
building a world of difference™

FINAL VALUE ENGINEERING STUDY REPORT

GOLETA WASTEWATER TREATMENT PLANT IMPROVEMENTS

GOLETA, CALIFORNIA

May 2009

Prepared for:

Goleta Sanitary District

One William Moffett Place
Goleta, California 93117

Prepared by:

JLMVE ADDING VALUE TO THE SOLUTION

JLM VE Services, Inc.
9206 West 90th Street
Overland Park, KS 66212
913-381-0603

JLM VE Project No. 030901

In Association with:

BLACK & VEATCH
building a world of difference™

Black & Veatch
800 Wilshire Blvd., Suite 600
Los Angeles, CA 90017

TABLE OF CONTENTS

SECTION 1 – INTRODUCTION

Report Summary *1-1*
Using This Report *1-1*
Project Description *1-2*
Introduction 1-2
Background 1-2
Scope of This Value Engineering Study 1-2
VE Workshop Schedule 1-3
Project Constraints 1-3
Improving Value *1-4*
Project Cost Analysis *1-5*
Distribution of Costs 1-5
Comments to the Cost Estimate 1-5
Life Cycle Cost Criteria 1-10

SECTION 2 – SUMMARY OF RESULTS

Introduction *2-1*
Using the VE Study Results *2-1*
Category A - VE Proposed Concepts 2-1
Category B1 and B2 – Comments to the Design Team 2-2
Category C – Creative Idea List 2-3

SECTION 3 – VALUE ENGINEERING RESULTS

Introduction *3-1*
CATEGORY A – VE PROPOSED CONCEPTS
CVE Proposed Concepts 3-3
HEADWORKS MODIFICATIONS (HW)
HW-04_*Consider repositioning screens to allow more space for washer compactor(s)* *3-5*
FLOW EQUALIZATION (FE)
FE-01_*Use precast concrete vault for valves* *3-13*
ACTIVATED SLUDGE (AS)
AS-10_*Hang aeration manifold piping off walls* *3-17*
DISSOLVED AIR FLOTATION SYSTEM (DS)
DS-01_*Replace DAF thickening with mechanical thickening that can be co-located with mechanical dewatering in the Dewatering Building* *3-23*
DS-09_*Enclose Dissolved Air Floatation (DAF) equipment in three-walled building* *3-31*
SOLIDS HANDLING (SH)
SH-05_*Extend dewatering building to cover polymer pad and pumps* *3-41*
BLOWER BUILDING (BB)
BB-04_*Add overhead doors to remove equipment and reduce building footprint* *3-51*
CATEGORY B1 – COMMENTS TO THE DESIGN TEAM/SUGGESTIONS
Comments to the Design Team/Suggestions 3-57
FLOW EQUALIZATION (FE)
FE-06_*Confirm size of FEQ tank (bigger/smaller)* *3-59*
TRICKLING FILTERS (TF)
TF-01A_*Design new trickling filter as a water containing structure* *3-61*
SECONDARY CLARIFICATION (SC)
SC-12_*Use solids contact channel for parts storage and other uses* *3-63*
DISSOLVED AIR FLOTATION SYSTEM (DS)
DS-01A_*Use compact dewatering equipment* *3-65*
SOLIDS HANDLING (SH)
SH-01_*Dedicate space on site for potential on-site Solids Management facility* *3-67*

SECTION 1 - INTRODUCTION

REPORT SUMMARY

This report presents the results of a Value Engineering (VE) study conducted by JLM VE Services, Inc. (JLM VE) in association with Black & Veatch Corporation (B&V) on the design of the upgrades to the Goleta Regional Wastewater Treatment Plant (WWTP) in Goleta, California, for the Goleta Sanitary District (GSD). The project designer is HDR and associated firms and they provided the VE Team with the design documents that were 30% complete. The 36-hour VE workshop was conducted in Goleta, California, March 2-5, 2009. A complete list of the participants is presented in Appendix B.

The objectives of the GSD WWTP improvements are to provide customers with an advanced treatment facility that meets today's needs, that can most easily comply with future requirements, and that provides these services at the lowest capital investment and operating costs.

The goal of the VE study was to enhance the value of the work that had been completed to date by gaining an understanding of the objectives of the GSD and the approach of the HDR design team to meet these objectives. The team became familiar with both the existing Goleta WWTP and the planned upgrades so that a broad spectrum of alternative ideas could be developed. The more promising ideas were developed as proposed concepts to the Designer's original concept so that the GSD and HDR could select the concepts that provided the best value solution.

This report is divided into three sections that present the results of the study followed by an appendix that documents workshop procedures. Section 1 provides a guide for making the most effective use of the report and additional information that is critical to understanding the results. Section 2 provides an introduction to each category of the results and Section 3 contains the completed work for each proposal or comment within a category. The appendices provide complete documentation of the VE procedures used in the workshop, the information provided to the team and developed in the workshop and the study participants.

USING THIS REPORT

The format of this report is designed for efficient use by a variety of project stakeholders that have differing responsibilities related to the design and completion of the Goleta WWTP upgrades. The report, and each element of the report, has been organized in a layered fashion that generally begins with an overview, and becomes progressively more detailed.

This section of the report familiarizes the reader with the project, the content, and organization of the report and criteria related to the evaluation of concepts proposed by the VE team. It includes information about the use of the term value, the Designer's Opinion of Probable Cost, the cost comparisons that were made and the constraints that affected the proposed concepts. A brief review of this material will allow specific information to be located quickly and shorten the review time.

Section 2 describes the different categories of the study results, the organization, and the significance of each of them and how they can best be used. Section 3 presents the detailed results of the study and is generally divided into the detailed recommendations, comments to the Design Team's Original Concepts and a comprehensive listing of all the ideas generated by the VE team. The Appendices provide additional technical detail about the project, additional detail about the VE process, an explanation of the basis for cost comparisons, and other details about the study.

PROJECT DESCRIPTION

Introduction

The Goleta WWTP is undergoing a significant multi-faceted improvement project. The upgraded facilities will convert the current blended secondary treatment process to the full secondary level. The existing treatment process complies with all current standards; however, the upgraded plant will conform to the higher levels of treatment required by ever-increasing regulations and new environmental protection requirements. As a part of the upgrade, full advantage is being taken of the opportunity to increase operating efficiency and to better utilize treatment byproducts. Numerous design options, treatment processes, and financing methods were considered to ensure that the upgraded facility represents the best solution.

Background

The Goleta WWTP was originally built in 1951 and was substantially upgraded in 1988. It serves the entire Goleta Valley and produces a blend of primary and secondary treated wastewater that is also disinfected. The treated effluent is safely discharged via an ocean outfall to a location more than one mile off shore. In addition, the plant treats part of the wastewater flow to a higher level of treatment, called tertiary. The valuable recycled water that is produced is used by Goleta Water District for irrigation. The Goleta WWTP is located in an unincorporated coastal area of Santa Barbara County, California, approximately 10 miles west of the City of Santa Barbara, near the Pacific Coast.

The Goleta WWTP treats wastewater generated in the GSD, the Goleta West Sanitary District (WSD), the University of California at Santa Barbara (UCSB), and the Santa Barbara Municipal Airport (SBMA) service areas. Existing agency agreements established GSD as the owner of the joint wastewater treatment facilities and the responsible party for the facility operation and maintenance (O&M). Each agency, however, "owns" an "indeterminate, perpetual, and exclusive capacity right" in the facilities and an "easement right of flow through" the facilities.

Currently, the Goleta WWTP operates under the provisions of Section 301(H) of the Clean Water Act. This Section provides for five-year permits, allowing municipalities to discharge effluent into the ocean that has not received full secondary treatment. In November 2004, GSD and the Regional Water Quality Control Board (RWQCB) Central Region entered into a settlement agreement to issue two consecutive five-year permits to continue operating under the 301(H) provisions and for GSD to upgrade the WWTP to discharge fully treated secondary effluent by November 2014. GSD retained HDR Engineering to prepare a facilities planning document identifying a cost-effective alternative to meet the provisions of this settlement agreement. GSD also retained Tetra Tech to prepare the associated environmental documentation.

The quality and quantity of the discharge is regulated by a National Pollutant Discharge Elimination System (NPDES) permit issued jointly by the United States Environmental Protection Agency (EPA) and RWQCB Central Region. As part of the settlement agreement, Goleta WWTP will continue operations under the provisions of Section 301(H) until November 2014, when GSD will be required to discharge fully treated secondary effluent to the Pacific Ocean.

Scope of This Value Engineering Study

This study is the only study currently planned for this project. The following areas comprise the scope of the Goleta WWTP upgrades and improvements when the VE study was conducted:

- Primary Effluent Flow Equalization Basin
- Primary Effluent Junction Structure
- Equalized Flow Pump Station
- New Aeration Basins
- New Secondary Sedimentation
- Roughing Filter
- Dissolved Air Flotation Tanks
- New Trickling Filter Pumping Station
- Solids Dewatering Building
- Blower Building
- Sludge Holding Tank
- Return Activated Sludge Station 2
- Secondary Effluent Pumping Station 2

Supplemental Improvements

- Anaerobic Digester
- Headworks Improvement
- New Shower And Locker Room
- Cogeneration System
- Administration Building
- Pelletizer

VE Workshop Schedule

The complete agenda for the workshop is provided in the Appendices. The following list summarizes the sessions of the workshop.

- Pre-workshop organizational meeting – February 24, 2009
- VE Team orientation meeting – March 2, 2009
- Site visit by the VE Team – March 2, 2009
- VE workshop – March 2-5, 2009

Project Constraints

The scope of a VE study is often confined by the same project constraints that were encountered by the Design Team. Constraints result from a variety of issues that are considered to be outside the scope of the VE study such as technical feasibility, political matters, or environmental concerns. Generally, these constraints are aspects of the project that GSD and/or HDR design team believe cannot be changed and would be a waste of valuable time for the VE Team to review. It is extremely important to identify constraints, or boundaries, beyond which the VE Team is not expected to venture for two reasons:

1) excessive constraints can inhibit the team's ability to identify creative opportunities for project enhancement; and 2) inadequately defined constraints can result in the VE effort being wasted in areas where there is no possibility of change.

The following project constraints were defined for this VE study:

- The upgrade to the GSD WWTP must accomplish full secondary treatment for 9.0 mgd.
- The upgrade will in no way expand the plant beyond it current capacity.
- The upgrade design is to use as much of the existing facility as possible including using the existing trickling filters and increasing their capacity.
- The trickling filter/activated sludge process selected for secondary treatment cannot be changed, although improvements to the process may be possible.
- The Indian village sites identified on the WWTP site cannot be disturbed.
- The existing setback distance, or buffer zone, that exists between the plant and the roadway in front of the plant (William Moffett Place) must be maintained.
- Some areas on the plant site have been designated as "environmentally sensitive" and cannot be disturbed.
- Include flexibility to implement future nitrification and later N/dN and P removal.

IMPROVING VALUE

The first step toward improving value is to define and understand the characteristics of the features that comprise value. Using this understanding, the principal elements of the project can be analyzed to determine how they contribute value to the project and to what extent. The analysis of the value of an element produces a partial quantification of its value and this can be used as a basis for a value comparison between alternative concepts. The objective of value analysis is to provide the Owner with the information necessary to select the combination of project elements that result in best value for the Owner. The value team and the designer will assist the Owner in this process by interpreting the results and recommendations of the VE study and their impact on the project as a whole.

A common understanding of value is difficult because value is inexact by its very nature and has different meanings to different people. This can lead to many interpretations, depending on the situation and the people involved. However, for this study, the value of the project, or its elements, will simply be expressed as a comparison between the functions they must accomplish and the resources required to produce those functions, or:

$$Value \simeq \frac{Function}{Resources}$$

Where:

- Function is what must be accomplished to achieve success, and
- Resources are the labor, materials, equipment, etc required to accomplish the function.

Best value is achieved when the required functions are satisfied with the minimal resources. The Owner of the project defines success by specifying the functional requirements that must be accomplished. Resources can be quantified in terms of cost and the methods used to evaluate those costs were cost models and cost comparisons.

PROJECT COST ANALYSIS

The team reviewed the HDR cost estimate to determine the distribution of costs, the reasonableness of major cost components, and to ensure a common basis for cost comparisons of VE recommendations with the original design.

Distribution of Costs

The VE Team prepared several models of project resources to assist the team in better understanding the project and the distribution of resources within the project. The VE Team prepared three cost models for the project based on the designer's preliminary estimate of construction cost as follows:

- Figure 1 is a capital cost model showing the construction cost of the major project components using direct costs only.
- Figure 2 is a capital cost model showing the construction cost of the major project components as a percentage of the total construction cost.
- Figure 3 is a capital cost model showing the construction cost of the major project components with markups added to the direct costs.

The cost models were used by the team to identify parts of the project with the greatest costs and to aid in focusing the efforts of the team during the study.

Comments to the Cost Estimate

A complete review of all of the estimate's backup data was not attempted due to time limitations; however, reviews were made of some quantities for the larger cost items within the estimate.

The VE Team's review of the designer's cost estimate resulted in the following summary comments and observations:

- Estimated costs are based on the work being performed by a contractor with prices prevailing during the following schedule from the HDR cost opinion:
    - Bid date 7/1/2011
    - Notice to proceed 9/1/2011
    - Estimated time of construction 730 days
    - Final completion date 8/31/2013
    - Mid-point of construction date 8/31/2012
    - Average annual change percentage 5.54%
    - Escalation from Estimate Data Date to Mid Point of Construction 28.63%
- The VE Team made no changes to escalate the cost to mid-point of construction to remain consistent with the HDR cost opinion.

- The bid date for the project has been moved to March 2010. No adjustments were made by the VE Estimator to reflect the saving for escalation on the project.

- At the time of the VE study the schedule and construction sequence planning had not been developed due to potential changes that may result from pending information. It is recommended that a schedule be developed to reflect the cost impact to the contractor of downtime and sequencing issues that are anticipated due to site restrictions and plant operation. The contractor's bid will be directly related to the risks associated with sequencing and phasing operations. These risks, and consequently a contractor's bid, can be reduced by providing a plan to accomplish these operations that is based on the Owner's requirements and/or site restrictions during construction.

- Re-evaluate the contractor overhead and profit percentages to determine if they should be adjusted to be consistent with the Means database that was used to prepare the cost opinion for this project. It appears that the project cost was developed by using direct costs plus markups and that this may have resulted in an imbalance in the total project cost.

- The total markup used by the value team is 1.03 or 49.2 % including escalation to the mid point of construction. The total markup was developed using the values from the HDR OPCC as indicated in the following table:

Direct Cost Subtotal (DCS)	$26,790,363
Contractor's Field Overhead & Mobilization	9.00%
Sales Tax Estimate (Materials & Equipment)	7.75%
Contractor's Fee	15.00%
Contactor's Bond & Insurance	1.50%
Undefined SOW (Contingency)	20.00%
Escalation to Mid-Point of Construction (08-31-12)	28.63%
Current OPCC Estimate Budget	$54,397,803
Total Markup = OPCC ÷ DCS – 1	1.03

Based on a review of the unit costs in the HDR estimate the VE team recommends the following be considered:

- Review quantities if the estimate used by the VE team will be needed before the final estimate is prepared.

- Arrange the takeoff for structures using the same sequence as the hydraulic profile.

- Re-examine the costs used for concrete masonry. It appears an incorrect multiplier was used in a cost handout given to the VE team at the workshop. This handout showed the unit costs for masonry to be much higher than the costs in the original electronic version of the estimate given to the team prior to the workshop. The cost to install masonry block has been averaging approximately $35/sf in most areas of the US.

- Review the markups that are added to the direct cost items; many of the direct cost do not appear to need additional markups.

- Consider using unit costs where possible and only include those markups related to labor and materials. For example, use a per cubic yard cost for all slab on grade concrete and avoid the very detailed breakdown. Then, on the Summary Page of the cost opinion only show the

Contingency and the Escalation to Mid-point of Construction as mark-ups. See the sample estimate format that follows.

- Demolition costs were shown for the Blower Building, but no demolition work could be identified on the drawings:

Item Description	Quantity	Unit	Unit Cost	Total Cost
Blower Building				
Cost listed in Estimate (Direct Cost)				
Demolition	520	hr	$376.01	$195,523
Using an average wage of $65 per hour would give a crew of $376/$65= 5.78 workers Number days of demo at 8 hr days, 520/8 =65 days				
Cost listed in Estimate (Construction Cost)				
Demolition	520	hr	$763.29	$396,912
Using an average wage of $65 per hour would give a crew of $763/$65= 11.74 workers Number days of demo at 8 hr days, 520/8 =65 days				

- The VE Estimator assumed that the demolition costs included the equipment and disposal. If not, these costs need to be included.

The following comments are intended for the next cost opinion, expected to be completed when the design is 60% complete. It is understood that these issues will probably be addressed, but they have been included in case they might be overlooked:

- It is recommended that the cost opinion clarify the risk.

- Show the areas to be demolished on dimensioned drawings to develop the costs.

As a result of this review, it is recommended that a cost opinion be developed similar to the format shown on the following page. This simpler format is one the designer can use to monitor the cost of the project more closely.

BLACK & VEATCH – VE Estimator Worksheet				
Item Description				
Blower Building (19'-4" x 54' x 20'-0")				
1,044 sf				
20,876 cf				
	Quantity	Unit	Unit Cost	Total Cost
Earthwork	1,044	sq ft	$ 7.24	$ 7,558
Concrete	1,044	sq ft	$ 29.04	$ 30,317
Masonry	1,044	sq ft	$ 105.99	$ 110,656
Metal	1,044	sq ft	$ 16.83	$ 17,570
Ther & Moisture	1,044	sq ft	$ 34.05	$ 35,543
Doors & Windows	1,044	sq ft	$ 10.18	$ 10,623
Finishes	1,044	sq ft	$ 12.65	$ 13,209
Specialties	1,044	sq ft	$ 6.77	$ 7,073
Subtotal - Blower Building				**$224,991**
HVAC	1,044	sq ft	24.19	25,256
Plumbing	1,044	sq ft	11.97	12,500
Electrical	1,044	sq ft	25.17	26,275
Total - Blower Building				**$289,022**
Building Cost per Square Foot				$216
HVAC				24
Plumbing				12
Electrical				25
Total Direct Cost - Blower Building per Square Foot				**$277**
Markup - Project Factor 1.03				$285
Total - Opinion of Construction Cost per Square Foot				**$562**

The table on the following page contains excerpts from the designer's cost estimate and includes additional review comments related to the development of the costs.

BLACK & VEATCH
VE Cost Work Sheet
Goleta WWTP, CA
March 5, 2009

Item Description	Quantity	Unit	Unit Cost	Total Cost
Blower Building				
Cost listed in Estimate (Direct Cost)				
Demolition	520	hr	$376.01	$195,523
Using an average wage of $65 per hour would give a crew of $376/$65= 5.78 workers				
Number days of demo at 8 hr days, 520/8 =65 days				
Cost listed in Estimate (Construction Cost)				
Demolition	520	hr	$763.29	$396,912
Using an average wage of $65 per hour would give a crew of $763/$65= 11.74 workers				
Number days of demo at 8 hr days, 520/8 =65 days				
Concrete - Foundation	86	cu yd	$332.81	$28,622
Masonry Unit	1,044	sq ft	$105.99	$110,656
Doors and Windows				
Overhead door, 12' x 12'	1	each	$1,828.00	$1,828
Door, 4' x 7' x 1 ¾"	1	each	$642.20	$642
VE Estimator Comments				
Demolition was not shown on the drawing for demo of the existing blowers. Existing blowers are not housed. Concrete cost seems reasonable (VE Estimator price would be $320/cy) Masonry Unit decorative block, $35/sf Overhead door, 12' x 12' = $10,000 for rolling steel 3' x 7' Door, $2,000/ea				
Cost of Structure by the Square Foot				
Total Direct Cost - Blower Building per Square Foot				$277
Total - Opinion of Construction Cost per Square Foot (with 2.03 markup)				$562
Aeration Tank (Activated Sludge)				
Biofilter				
"Add 2 New Biofilters..." listed in the title. Are the quantities for one or two Biofilters?				
VE Estimators Check on the Concrete	**VE Estimator**		**HDR Estimate**	
Slab on grade	360	cu yd	352	cu yd
Walls	200	cu yd	365	cu yd
Cost Listed in Estimate (Direct Cost)				
Demolition	390	hr	$376.01	$146,642
VE Estimator comment -- Was unable to find the area to be demolished.				
VE Estimators Check on the Concrete	**VE Estimator**		**HDR Estimate**	
Slab on grade	$320	cu yd	$346	cu yd
Walls	$510	cu yd	$450	cu yd
	Concrete cost at direct cost level			

Life Cycle Cost Criteria

The information in the table that follows was used to compute life cycle costs for the concepts that included annual or periodic costs.

COST DATA & ASSUMPTIONS	
For Life Cycle Costing:	
Year of Analysis (for Life Cycle Costs)	2014
Analysis Period	20 years
Net Discount Rate	6% annual
Energy Escalation Rate	5% annual
Non Energy Escalation	3% annual
Energy Costs:	
Electricity	$0.10 / KWH
Natural Gas	$0.80/therm
Chemicals:	
Polymer	$2.00/active lb
Labor *(Fully loaded salaries)*:	
Supervisor	$85.00/hour
Ops Staff	$55.00/hour
General Laborer	$40.00/hour
Other	$45.00/hour
Generalized O&M:	
Structures other than buildings	0.5% of capital cost per year
Mechanical/Electrical Equipment	4% of capital cost per year
Building operations & maintenance	$1.50/square foot/year
Other:	
Sludge Disposal (Off site)	$41/ton

SECTION 2 – SUMMARY OF RESULTS

INTRODUCTION

This section of the report describes the typical information to be found in each category of the results, the best use of the results, and a summary listing of all the results contained in Section 3. Table 2-1 lists the Proposed Concepts recommended by the VE team including the probable cost impact and status of each idea as of the completion of this report. It is important to note that the VE Team does no design work and makes no design decisions on the project. All decisions regarding changes to the design resulting from the concepts proposed by the VE Team are the responsibility of GSD and/or HDR.

USING THE VE STUDY RESULTS

The results of this VE study have been assigned to the following categories.

- Category A – VE Proposed Concepts
- Category B1 – Comments to the Design Team/Suggestions
- Category B2 – Comments to the Design Team/Original Concepts
- Category C – Creative Idea List

Each category provides information that can be of value to the proposed upgrades of the GSD WWTP. A description of the type of information and level of detail in each category follows.

Category A - VE Proposed Concepts

Ideas that would improve the value of this project and for which cost savings could be determined are presented in this category. These ideas offer the potential to improve value from one or more perspectives as follow:

- Maintain or improve the accomplishment of needed design functions at a lower life cycle cost.
- Improve the accomplishment of needed design functions at the same or similar life cycle cost.
- Improve the accomplishment of needed design functions for an appropriate increase in life cycle cost.

These proposed concepts are presented as a "shopping list" of value improvement opportunities for GSD. Some concepts are alternatives to one another, some are independent, and some overlap one another. For this reason, it is not possible to accept and implement all of the VE proposed concepts together. The District and their consultants evaluated each of the recommendations to determine which ones represent the best combination for project improvement.

Each of the VE Proposed Concepts is intended to convey an approach for change and not a detailed design. In order to calculate the cost impacts of these recommended changes, the VE Team had to make assumptions about design issues to determine quantities and sizes.

The material that has been compiled for the VE Proposed Concepts is arranged as a side-by-side comparison with the Designer's Original Concept. The information contained in each proposed concept has been organized using the same format to make the review process easier and to improve the understanding of the ideas. In general, this comparison contains the following information:

- A summary cover page that identifies the idea, provides a summary description of the Original and the Proposed Concept, and a summary of the cost impact
- A list of the advantages of each concept
- A discussion of the assumptions and other information related to implementation of the idea
- Sketches of each concept
- Calculations to determine quantities and costs of each concept
- Construction cost estimates
- Life Cycle Cost determinations

The proposed concepts presented on the following pages are organized by functional areas, and further identified numerically within each of those areas. The divisions used to organize the recommendations are as follows:

- Headworks Modifications (HW)
- Flow Equalization (FE)
- Activated Sludge (AS)
- Dissolved Air Flotation System (DS)
- Solids Handling (SH)
- Blower Building (BB)

To gain maximum benefit for the project, the VE proposed concepts should be reviewed to assess the viability of the concept rather than focusing on the details. It is important to review the assumptions included in the VE proposed concept to ensure that there is no flaw in the basic concept's viability and then to focus on how the concept can be made to work in a way that will benefit GSD. It may be necessary or beneficial to make modifications to the recommendations for two reasons: first, some changes may be needed to make an idea viable and secondly, the GSD and/or HDR will recognize that making modifications will improve an idea. Additionally, each part of a recommendation must be evaluated on its own merit, rather than discarding an entire recommendation because of concern over one particular aspect of the proposed change.

Category B1 and B2 – Comments to the Design Team

During the course of a VE workshop many ideas are identified that have the potential to add value to the project that do not require the same detailed development as the VE Proposed Concepts. These ideas are presented in Section 3 as VE Suggestions and Comments to the Original Concept.

Suggestions are typically ideas to change elements of the project or clarify the project documents for which an identifiable or quantifiable cost impact could not be determined within the scope of the workshop. These suggestions may, or may not, impact costs but each one is believed to increase the value of the project.

Comments to the Original Concept generally result from detailed recommendations that are developed to the point that it appears a fatal flaw exists or it becomes obvious they will not add value to the project. There

isn't sufficient time or information to analyze these alternatives to the degree of certainty required to validate the accuracy of the original concepts. However, these ideas, or some aspect of these ideas, tend to support features of the designer's original concept and for that reason, they are presented in the report.

Category C – Creative Idea List

This section of the report includes the entire list of creative ideas identified by the VE Team. There are often good ideas for project improvement or cost reduction identified by the VE Team that, because of the time limitations imposed by the VE workshop duration, cannot be developed by the VE Team. GSD and HDR have been provided the creative idea list to enable them to review all possible ideas that could improve the value of the project.

Table 2-1
Summary of VE Proposed Concepts

Idea No.	Description	Capital Cost Savings	Present Worth of O&M Cost Savings	Life Cycle Cost Savings	Final Status Owner/Designer
HW-04	Consider repositioning screens to allow more space for washer compactor	Nominal Increase			Accepted
FE-01	Use precast concrete vault for valves	$25,000	$0	$25,000	Accepted
AS-10	Hang aeration manifold piping off walls	$396,000	$0	$396,000	Accepted
DS-01	Replace DAF with combined thickening in the dewatering building; e.g. gravity belt thickener or rotary drum, etc.	$1,470,000	($470,000)	$1,000,000	Accepted
DS-09	Enclose DAF equipment in three-walled building	($105,000)	$230,000	$125,000	Rejected
SH-05	Extend dewatering building to cover polymer pad and pumps	($329,000)	$28,000	($301,000)	Partial Acceptance
BB-04	Add rolling overhead doors to remove equipment for maintenance and reduce building footprint	$130,000	$0	$130,000	Partial Acceptance

Table 2-2
Summary of VE Suggestions

Idea No.	Description
FE-06	Confirm size of FEQ tank (bigger/smaller)
TF-01a	Design new trickling filter as a water containing structure
SC-12	Use solids contact channel for parts storage and other uses
DS-01A	Use compact dewatering system
DS-03	Replace two circular tanks with one rectangular tank
SH-01	Do biosolids treatment onsite and do not depend on outsider disposal
SW-03	Use common trenches to reduce excavation and route electrical conduits in parallel with piping trenches where feasible
SW-08	Allow fiber optics or copper
IC-01 & IC-02	Integrate new I&C to match existing and purchase computer hardware and software as late as possible to get current version
NG-04	Provide parameters for down times, maintaining discharge requirements, temporary bypass/pump-arounds for contractor
NG-04A	Construction Limits
NG-12	Implement web page control system for construction management
NG-15	Hire consultant to verify red lines/as-builts for I&C/E
NG-24	Ensure concrete mix design that is applicable to Goleta conditions (salt air)
NG-27	Owner to pre-purchase equipment on critical path
NG-28	Designer to define the specific construction contingency based on change orders for similar HDR projects

Table 2-3
Summary of Comments to the Designer

Idea No.	Description
DS-07	Enclose dissolved air flotation (DAF) equipment (pumps and polymer tanks)
OC-04	Separate odor control for influent pump station and headworks
FE-05	Use Gunite lining
FE-08	Construct FEQ basin modifications now to facilitate construction of other facilities
TF-01B	Use existing trickling filters at current height -- do not raise and match new one, but increase the diameter of the new trickling filter
TF-06	Make two-foot height addition to existing trickling filters out of fiberglass or alternative material
TF-08	Delete concrete walls above grade on new trickling filter and add screen wall - media is self support
AS-04	Make aeration tank deeper and reduce size
SH-04	Use pre-engineered building or dewatering building
BB-01	Use pre-engineered building

SECTION 3 – VALUE ENGINEERING RESULTS

INTRODUCTION

This section of the report presents the comprehensive results of the VE study and is divided into the following categories:

A – VE Proposed Concepts

B – Comments to the Design Team

- Value Engineering Suggestion
- Comments to the Original Concepts

C – Creative Idea List

Category A - VE Proposed Concepts

The material that has been compiled for the VE Proposed Concepts is arranged as a side-by-side comparison with the Designer's Original Concept. The information contained in each proposed concept has been organized using the same format to make the review process easier and to improve the understanding of the ideas. In general, this comparison contains the following information:

- A summary cover page that identifies the idea, provides a summary description of the Original and the Proposed Concept, and a summary of the cost impact
- A list of the advantages of each concept
- A discussion of the assumptions and other information related to implementation of the idea
- Sketches of each concept
- Calculations to determine quantities and costs of each concept
- Construction cost estimates
- Life Cycle Cost determinations

The proposed concepts presented on the following pages are organized by functional areas, and further identified numerically within each of those areas. The divisions used to organize the recommendations are as follows:

- Headworks Modifications (HW)
- Flow Equalization (FE)
- Activated Sludge (AS)
- Dissolved Air Flotation System (DS)
- Solids Handling (SH)
- Blower Building (BB)

VE Proposed Concept

Concept Number:
AS-10

Concept Title:
Hang aeration manifold piping off walls

Description of Original Concept:
Air lines to the aeration basins are routed overhead on hangers above the tanks.

Description of Proposed Concept:
Relocate the air lines to the sidewalls of the structure.

	Capital Cost	Present Worth of O&M	Total Present Worth Cost
Original Concept	$440,000	$	$440,000
Proposed Concept	$44,000	$	$44,000
Estimated Savings	$396,000	$	$396,000

ADVANTAGES

Concept No.: AS-10

Advantages of the Original Concept:

- Improved accessibility to valves for maintenance
- Overhead piping reduces the possibility of injuries from the heated pipe

Advantages of the Proposed Concept:

- Reduces the amount of piping used
- Less structural support required
- Cleaner setup
- Reduced complexity
- Fewer obstructions to access of the aeration tanks

DISCUSSION

Concept No.: AS-10

Moving the pipe from the hangers running overhead reduces the amount of pipe needed and reduces the structural pipe supports.

In the new location, the air lines can be supported from the concrete sidewalls of the tank.

Consideration should be given to protection from surface heat in the air lines.

Original Concept ☒ **Proposed Concept** ☐

SKETCH

Concept No.: AS-10

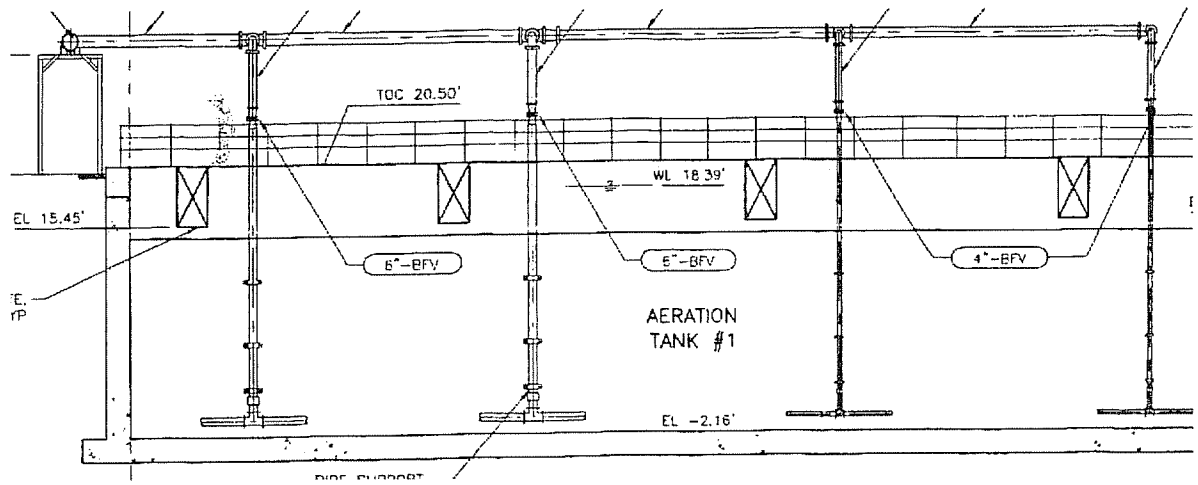

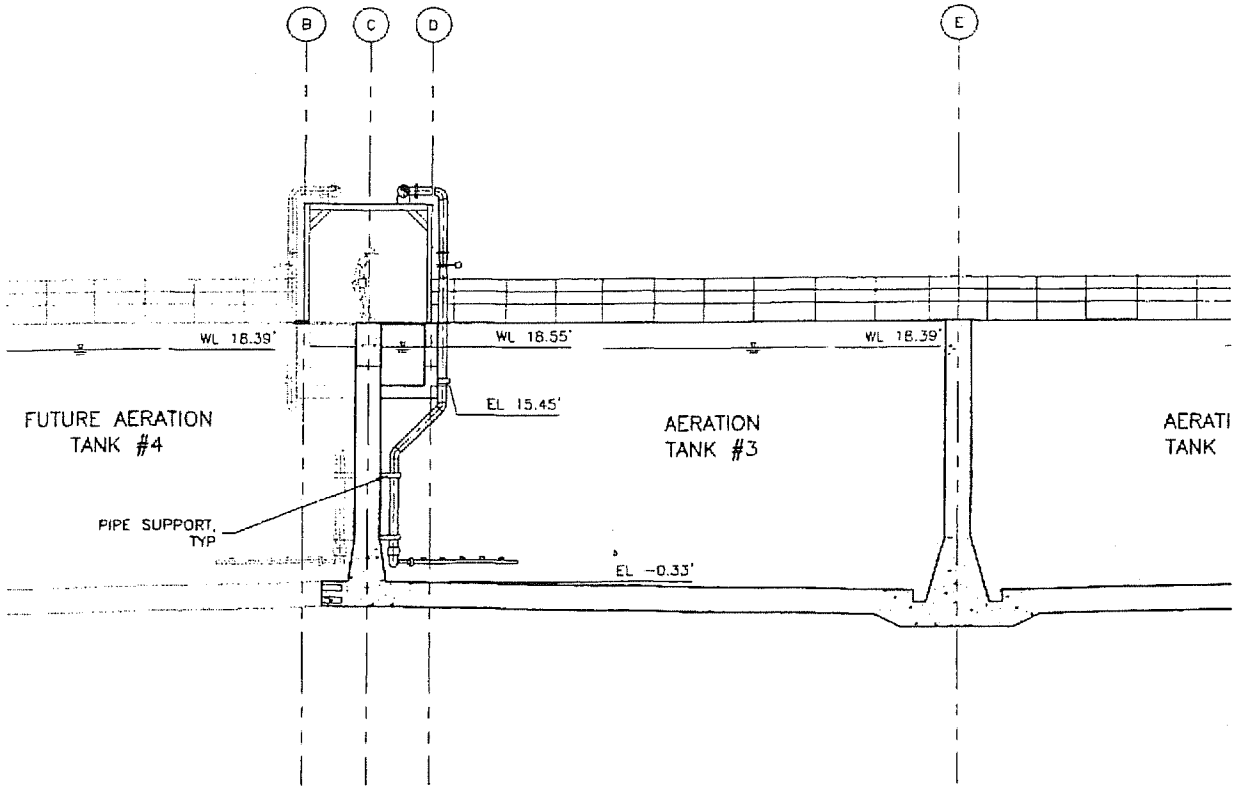

Original Concept ☐ **Proposed Concept** ☒

SKETCH

Concept No.: AS-10

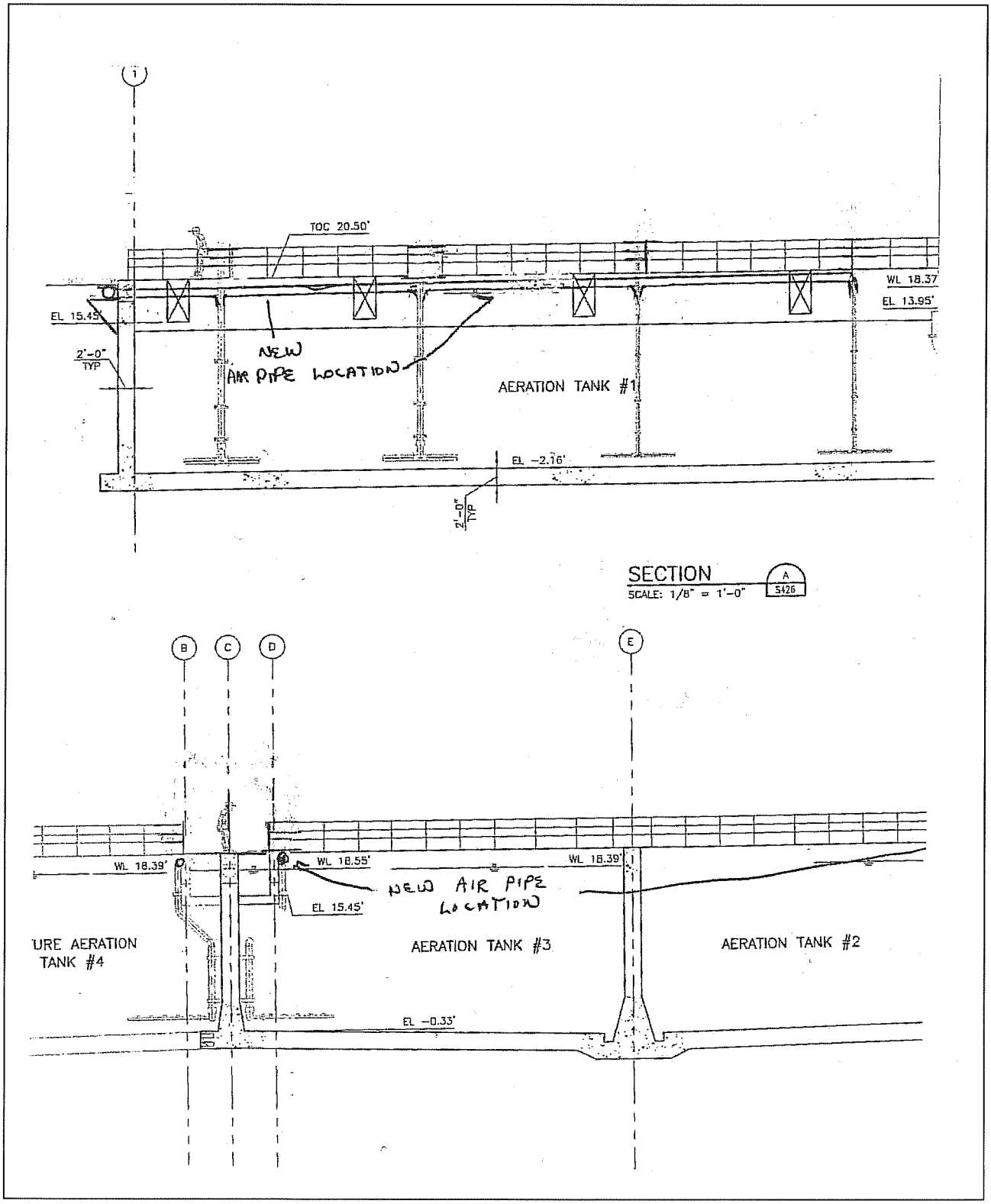

CONSTRUCTION COST ESTIMATE

Concept No.: AS-10

Cost Description			Original Concept		Proposed Concept	
Item	Units	Unit Cost ($)	Quantity	Total ($)	Quantity	Total ($)
Special Hanger Allowance	LS	43,080.00	1.0	43,080		
Air Piping	LF	463.00	320.0	148,160		
90 Degree Elbows for Air Pipe	EA	1,600.00	16.0	25,600		
Modified Support System*	LS				1.0	21,540
*Asumed modified support system would cost 50% of the original system						
Subtotal (Direct Costs)				**216,840**		**21,540**
SOW Contingency			103.0%	223,345		22,186
TOTAL CONSTRUCTION PROJECT				**440,185**		**43,726**
NET SAVINGS OR COST INCREASE (-)						**$396,459**

VE Proposed Concept

Concept Number:
BB-04

Concept Title:
Add overhead doors to remove equipment and reduce building footprint

Description of Original Concept:
One overhead door is shown on the drawings for access to the blowers.

Description of Proposed Concept:
Add two more overhead doors, 12' x 12', remove 8' x 12 door and replace with 6, x 12, door to provide direct access to individual blowers. This will allow the building footprint to be reduced.

	Capital Cost	Present Worth of O&M	Total Present Worth Cost
Original Concept	$140,000	$0	$140,000
Proposed Concept	$10,000	$0	$10,000
Estimated Savings	$130,000	$0	$130,000

ADVANTAGES

Concept No: BB-04

Advantages of the Original Concept:

- More storage space available
- Two fewer overhead doors
- Increased inside storage space
- Increased space inside for routine blower maintenance
- The blower building can be accessed at either end through a standard door
- The blower building can be accessed without opening a large rollup door

Advantages of the Proposed Concept

- Cost reduction for smaller building footprint
- Straight on access to each of the blowers will reduce maintenance costs associated with removing the blowers
- Less building space to maintain
- During maintenance the rollup doors can be opened to reduce heat in the blower building

DISCUSSION

Concept No: BB-04

A reduction in the size of the blower building reduces the cost of the building.

Installing larger overhead rollup doors directly in front of the blowers provides improved access to individual blower units for maintenance.

Routine maintenance may be more difficult because the building space has been removed.

Life cycle costs were estimated to be offsetting for the Original Concept and the Proposed Concept. The Original Concept will require slightly more maintenance because the size of the building is larger. The Proposed Concept will require slightly more maintenance for the additional overhead doors.

Original Concept ☒ **Proposed Concept** ☐

SKETCH

Concept No.: BB-04

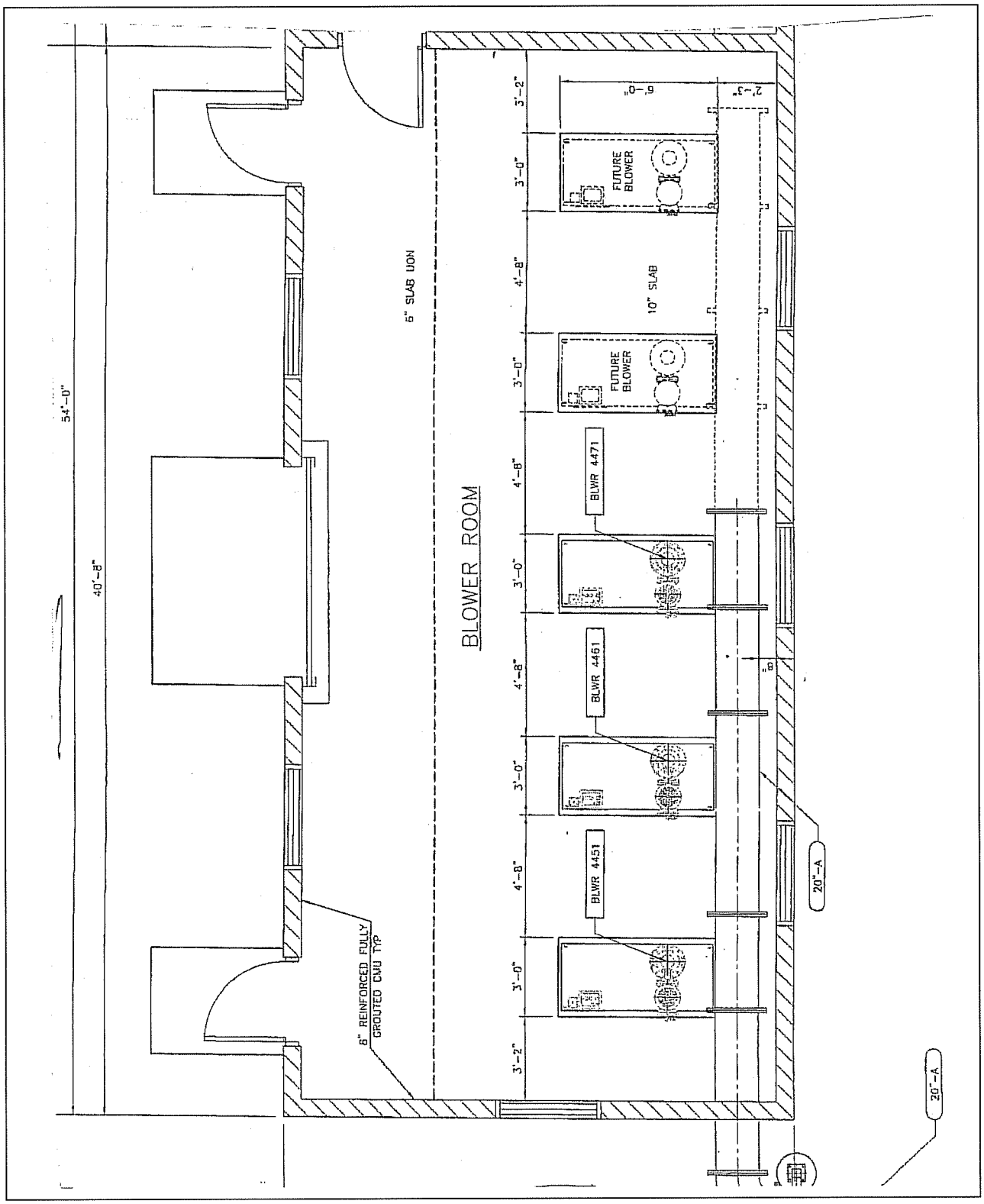

Original Concept ☐ **Proposed Concept** ☒

SKETCH

Concept No.: BB-04

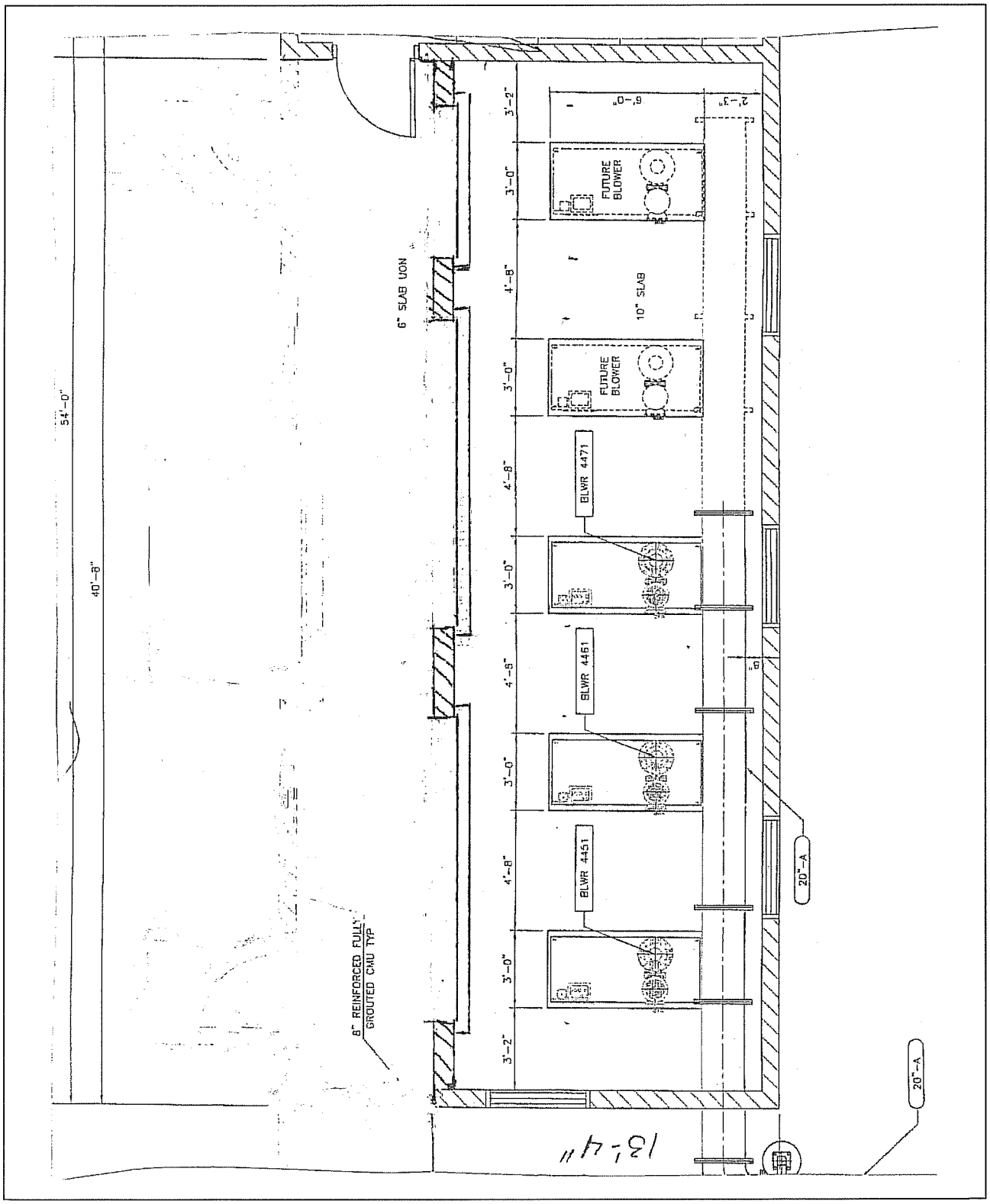

CONSTRUCTION COST ESTIMATE

Concept No.: BB-04

Cost Description			Original Concept		Proposed Concept	
Item	Units	Unit Cost ($)	Quantity	Total ($)	Quantity	Total ($)
Reduce Blower Building size	SF	277.00	240.0	66,480		
12 x 12 Overhead Rollup Doors	EA	1,828.00			2.0	3,656
8 x 12 Overhead Rollup Door	EA	1,600.00	1.0	1,600		
6 x 12 Overhead Rollup Door	EA	1,200.00			1.0	1,200
3' man door	EA	642.20	2.0	1,284		
Note: Cost for Overhead Doors from HDR estimate.						
Subtotal (Direct Costs)				**69,364**		**4,856**
SOW Contingency			103.0%	71,445		5,002
TOTAL CONSTRUCTION PROJECT				**140,809**		**9,858**
NET SAVINGS OR COST INCREASE (-)						**$130,951**

Category B1 – Comments to the Design Team/Suggestions

Value Engineering Suggestions

VE suggestions contain much of the same information as the VE Proposed Concepts, except that no cost information is presented. These ideas offer several opportunities that may increase value for reasons other than cost reduction, such as:

- Improved operation
- Ease of maintenance
- Easier construction
- Reduced risk of construction claims
- Clarification of construction documents
- Or safer working conditions

Value Engineering Suggestion

Concept Number:
SC-12

Concept Title:
Use solids contact channel for parts storage and other uses

Description of Original Concept:
Abandon upper aeration channel portion of the solids contact basin entirely

Description of Proposed Concept:
Consider using the solids contact aeration channel.

Discussion
Consider an alternative use for solids contact aeration channel, such as parts storage.

Value Engineering Suggestion

Concept Number:
NG-28

Concept Title:

Designer to define the specific construction contingency based on Change Orders for similar projects.

Description of Original Concept:
The Designer's estimate contains contingencies, but does not show a specific construction contingency based on Change Orders for projects similar to the Goleta WWTP Improvements completed by the Designer.

Description of Proposed Concept:
Provide a separate line item in the Designer's estimate for a construction contingency and base it on change orders for past projects completed by the Designer for similar projects

Advantages to the Original Concept

- None apparent

Advantages to the Proposed Concept

- Provides the Owner with a more accurate forecast of the probable construction costs.

Discussion
The market-place is highly volatile at this time and is expected to be for next few years. Providing the Owner with better information as to the total construction cost will enable them to more accurately plan their budgets.

Category B2 – Comments to the Design Team/Original Concepts

The comments that follow are generally ideas that were initially developed as recommendations, however, development was stopped when it was determined that they contained a fatal flaw or offered little or no value improvement. Some these ideas were determined to be infeasible by inspection and only a brief description is provided. Comments have been added to indicate why it was believed the idea should not be implemented.

Idea No. & Description	Comments
Flow Equalization (FE)	
FE-05 Use Gunite lining	It was decided to not recommend replacing the concrete lining selected by the designer with Gunite lining in the Flow Equalization Basin. The method of placement of the Gunite lining could result in a less durable lining that would not withstand the high-pressure wash-down water.
FE-08 Construct FEQ basin modifications now to facilitate construction of other facilities	This idea was originally recommended so that a sizeable earthwork project could be completed early resulting in fewer simultaneous construction activities and fewer coordination problems for the Contractor. The savings that might result from this idea were not believed to be worth the added contract administration and other coordination issues that may result.
Trickling Filters (TF)	
TF-01B Use existing trickling filters at current height -- do not raise and match new one, but increase the diameter of the new trickling filter	Changing the volume of the new trickling filter may create hydraulic problems and does not offer significant improvement.
TF-06 Make two-foot height addition to existing trickling filters out of fiberglass or alternative material	It is possible to replace the concrete extension walls at the Trickling Filters with a fiberglass wall (or another non-structural material) because the filter media is self-supporting and a structural wall is not required. However, the initial capital cost savings would not be significant and a material other than concrete would lead to a future cleaning expense, possible replacement costs and an unsightly appearance.
TF-08 Delete concrete walls above grade on new trickling filter and add screen wall - media is self support	It is possible to replace the portion of the concrete walls of the new Trickling Filters that are above grade with a screening wall because the filter media is self-supporting. However, the initial capital cost savings would not be significant and a material less durable than concrete would lead to future repair and replacement costs. The Trickling Filters are in a highly visible location on a plant site that is highly visible to the public. Screen walls are not used in similar locations and would detract from the appearance of the plant.

Activated Sludge (AS)	
AS-04 Make aeration tank deeper and reduce size	The objective of this idea was to minimize the volume of cast-in-place concrete, excavation, and backfill required to construct the aeration tanks by changing the shape of the aeration tanks, but maintaining the same volume as the Original Concept. The only viable option was to increase the tank depth. It was decided to reject this idea because increasing the depth of the tank may not be advisable based on the soils report and it would be very costly.
Solids Handling (SH)	
SH-04 Use pre-engineered building or dewatering building	Pre-engineered buildings are constructed almost entirely from steel and would be far more maintenance intensive that the designer's Original Concept due to the ocean-air environment. A small initial cost savings might be possible based on a preliminary per square foot cost estimate; however, future O&M costs would be very expensive based on the Owner's actual experience.
Blower Building (BB)	
BB-01 Use pre-engineered building	Pre-engineered buildings are constructed almost entirely from steel and would be far more maintenance intensive that the designer's Original Concept due to the ocean-air environment. A small initial cost savings might be possible based on a preliminary per square foot cost estimate; however, future O&M costs would be very expensive based on the Owner's actual experience.

Category C – Creative Idea List

All of the ideas generated by the VE Team during the Creative Phase of the workshop are included on the pages that follow. The ideas believed to be the best ideas have been developed as recommendations or made suggestions to the designer. There may be other ideas in this list that GSD and/or HDR will recognize as being of value based on their more comprehensive knowledge of the project. Generally, the higher the vote total for an idea the more value it offers the project.

CREATIVE IDEA LIST

Idea No	Description	Rating[1]
Headworks (HW)		
HW-01	Use EIMCO screens	0
HW-02	Use Parkson screens	0
HW-03	Look at the tight working space and in grit/screening to make area work more efficiently	0
HW-04	Consider repositioning screens to allow more space for washer compactor	6
HW-05	Use alternative without sluice box that has dedicated washer compactor for each screen	0
HW-06	Lower screenings hopper to make accessible	1
Primary Treatment Modifications (PT)		
PT-01	Keep existing primary sludge pumps (see Solids H)	3
Flow Equalization (FE)		
FE-01	Use precast concrete vault for valves	4
FE-02	Replace metal covers with precast over valve vaults	1
FE-03	Replace concrete channels with pipe for flows to pump station	2
FE-04	Replace concrete with plastic liner	2
FE-05	Use Gunite lining	0
FE-06	Confirm size of FEQ tank (bigger/smaller)	DS
FE-07	Use existing pump stations in lieu of building new one	3
FE-08	Construct FEQ basin modifications now to facilitate construction of other facilities	0
FE-09	Do not line FEQ basin	0
FE-10	Replace concrete liner with stabilized soil	0
FE-11	Modify slope, etc. (slope bottom) to facilitate cleaning	0

[1] *DS = Design Suggestion / ABD = Already Being Done*

Idea No	Description	Rating[1]
SC-04	Use existing tertiary treatment fulltime to reduce size of secondary clarifiers	0
SC-05	Improve efficiency of secondary clarifiers and reduce total volume	0
SC-06	Modify geometry of tank, keep volume constant, and optimize volume of concrete (reduce)	0
SC-07	Eliminate stabilization lagoon No. 3 and move secondary clarifiers/ activated sludge/ et al to this location	1
SC-08	Use chemical addition ahead of secondary's to improve efficiency and reduce size	0
SC-09	Move secondary's closer together and common wall construct return activated sludge/waste activated sludge pump station	0
SC-10	Chlorinate the return activated sludge	0
SC-11	Include defoaming system	ABD
SC-12	Use solids contact channel for parts storage and other uses	DS
SC-13	Use solids contact channel for blower building	0
SC-14	Stationary lap pool for employees	0
SC-15	Demo intermediate floor in solids contact channel to increase wet well storage capacity for secondary effluent pump station	0
SC-16	Make existing solids contact channel the wet well for return activated sludge	0
Dissolved Air Flotation (DAF) System (DS)		
DS-01	Replace DAF with combined thickening in the dewatering building; e.g. gravity belt thickener or rotary drum, etc.	5
DS-01A	Use compact dewatering system	DS
DS-02	Thicken waste activated sludge only and keep existing primary sludge pumps	0
DS-03	Replace two circular tanks with one rectangular tank	DS
DS-04	Use vacuum collection on rake arms for sludge removal	3
DS-05	Replace flat covers with geodesic dome	2
DS-06	Make tanks rectangular and use skimmer collector and reduce cost of fabricating covers	1
DS-07	Enclose DAF equipment, pumps, and polymer tank	0
DS-08	Use all stainless equipment and leave outside	0
DS-09	Enclose DAF equipment in three-walled building	6
DS-10	Replace concrete tank with metal tank	1
DS-11	Optimize geometry (diameter vs. height) to optimize concrete	0
DS-12	Use stainless steel tanks	0

Idea No	Description	Rating[1]
SW-08	Allow fiber optics or copper	DS
SW-09	Replace DIP with plastic	2
SW-10	Run piping above grade	3
SW-11	Run power electric overhead	0
SW-12	Move A/S SEC, etc. to stab lagoon #2 and shorten piping of electrical runs	0
SW-13	Rearrange site for ultimate build out	0
SW-14	Install all six-inch and below diameter piping using directional drilling	3
SW-15	Replace roadways with intermittent block system and eliminate solid waste collection system	1
Blower Building (BB)		
BB-01	Use pre-engineered building	0
BB-02	Use pre-fabricated building	0
BB-03	Move all piping outside	0
BB-04	Add rolling overhead doors to remove equipment for maintenance and reduce building footprint	6
BB-05	Replace crane with monorail	0
BB-06	Eliminate crane and use boom lift	0
BB-07	Add overhead crane	1
BB-08	Common-wall construct blower building with aeration basin	2
BB-09	Replace metal sound panels with sound absorption blocks	0
BB-10	Locate blower building on top of aeration basins	0
BB-11	Locate blower building in center of aeration basins to shorten piping	3
BB-12	Optimize length of piping runs	1
BB-13	Use FRP ducts	3
BB-14	Relocate blowers to existing solids contact channel	1
BB-15	Use outdoor MCC panels	0
BB-16	Use fewer and larger blowers	0
BB-17	Reduce size of blower build to only house equipment needed now, but put in knock-out wall	0
BB-18	Locate blowers outside in individual dog houses	0
BB-19	Locate blower over or adjacent to aeration basin distribution box	0
Instrumentation & Controls (IC)		
IC-01	Integrate new I&C to match existing	DS
IC-02	Purchase computer hardware and software as late as possible to get current version	DS

Idea No	Description	Rating[1]
NG-28	Designer to define the specific construction contingency based on change orders for similar HDR projects	DS
NG-29	Engineer to provide work breakdown structure and cost codes for contractors CPM schedule	2
NG-30	Fast track where feasible, say build Area #1 first	2
NG-31	Use semi design-build and use HDR construction group to build	0
NG-32	Use construction management approach	2
NG-33	Use "chance" piles	0
NG-34	Use "rock-filled" piles	0
NG-35	Use solar panel	1
NG-36	Bring in equipment by helicopter	0
NG-37	Bring large quantity materials (concrete and steel) by barge	0
NG-38	Consider EJCDC Feds	0
NG-39	Utilize digester gas	1

Idea No	Description	Rating[1]
Non-Specific General (NG)		
NG-01	Use same subcontractor for I&C and EE	0
NG-02	Design structure sizing such that same forms can be used for different structures; say multiples of 4	0
NG-03	Specify laydown areas	0
NG-04	Provide parameters for down times, maintaining discharge requirements, temporary bypass/pump-arounds for contractor	DS
NG-04A	Construction Limits	DS
NG-05	Indicate locations for temporary pump-arounds	0
NG-06	Designate soil storage locations	0
NG-07	Specify temporary erosion control for excavated materials	0
NG-08	Reuse all effluent for agricultural irrigation and abandon outfall	1
NG-09	Tighten specs on concrete quality	1
NG-10	Use HDR on-site resident engineer to oversee construction	3
NG-11	Use electronic shop drawing submittals	ABD
NG-12	Implement web page control system for construction management	DS
NG-13	Use cost and resource loaded schedule to pay contractor	3
NG-14	Take advantage of summer flows to facilitate construction	0
NG-15	Hire consultant to verify red lines/as-builts for I&C/E	DS
NG-16	Use design-build project delivery systems	0
NG-17	Define specific expectations for contractor	1
NG-18	Leave contractor more options for means and methods of construction	0
NG-19	Consider noise control during construction	1
NG-20	Specs to restore all damaged roads, structures, etc. to preconstruction conditions	0
NG-21	Offer incentives for early completion	3
NG-22	Use partnering	0
NG-23	Use high-performance concrete	1
NG-24	Ensure concrete mix design that is applicable to Goleta conditions (salt air)	DS
NG-25	Reconsider recommendation by Geotech to over-excavate four-feet	2
NG-26	Specify/restrict size of equipment brought on-site based on height and/or weight	0
NG-27	Owner to pre-purchase equipment on critical path	DS

Idea No	Description	Rating[1]
DS-13	Use "blue" farmer tank (like porcelain)	0
DS-14	Replace concrete tank s with FRP tanks	0
DS-15	Relocate DAFs to Area #1	2
DS-16	Replace cover with odor control	0
DS-17	Eliminate odor control	0
DS-18	Use prefabricated building	1
Solids Handling (SH)		
SH-01	Do biosolids treatment onsite and do not depend on outsider disposal	DS
SH-02	Waste-to-energy	0
SH-03	Add on-site composting	0
SH-04	Use pre-engineered building or dewatering building	0
SH-05	Extend dewatering building to cover polymer pad and pumps	6
SH-06	Use centrifuges rather than screw press	3
SH-07	Eliminate DAFs and move dewatering building to same area	1
SH-08	Reconfigure dewatering building and tank farm to eliminate conveyor support structure	1
SH-09	Move dewatering building to west side to east side.	1
Odor Control (OC)		
OC-01	Eliminate odor control	0
OC-02	Replace WWTP odor control system with odor control in collection system	0
OC-03	Replace activated carbon odor control with biofilter at each odor control location	2
OC-04	Combine odor control at headworks and DAF into one system	0
OC-05	Combine all odor control systems into a single system	2
OC-06	Replace odor control with masking agent	0
Site work and Yard Piping (SW)		
SW-01	Stay within exiting piping corridors	3
SW-02	Balance cut-and-fill	1
SW-03	Use common trenches to reduce excavation and route electrical conduits in parallel with piping trenches where feasible	DS
SW-04	Route electrical conduits in parallel with piping trenches where feasible	0
SW-05	Replace concrete electrical conduits with gravel	0
SW-06	Only use concrete encased conduit under roadways	0
SW-07	Use direct-bury cable	0

Idea No	Description	Rating[1]
Trickling Filters (TF)		
TF-01a	Design new trickling filter as a water containing structure	DS
TF-01b	Use existing trickling filters at current height -- do not raise and match new one, but increase the diameter of the new trickling filter	0
TF-02	Deepen trickling filters by two feet	0
TF-03	Use rock media	0
TF-04	Do not build new trickling filter, but modify existing as needed	1
TF-05	Modify recirculation pump station and do not add new one	0
TF-06	Make two-foot height addition to existing trickling filters out of fiberglass or alternative material	0
TF-07	Set up trickling filter to operate in series in the future by installing piping/valves	1
TF-08	Delete concrete walls above grade on new trickling filter and add screen wall - media is self support	2
TF-09	Replace rake arms with gridded nozzle system	0
TF-10	Replace one new trickling filter with two trickling filters	0
TF-11	Use biotowers in lieu of or in conjunction with trickling filter	0
Activated Sludge (AS)		
AS-01	Replace structural slab in each cell with concrete lined	1
AS-02	Full floor coverage diffused aeration	ABD
AS-03	Use fine bubble aeration	1
AS-04	Make aeration tank deeper and reduce size	0
AS-05	Build future tank now	1
AS-06	Build two larger tanks now and third tank later	0
AS-07	Make tanks smaller or use fewer to just handle current loads and flow and build new tanks to address future regulations and growth	1
AS-08	Raise tank wells to be 40-inches above grade and eliminate handrail	3
AS-09	Combine activated sludge tanks with secondary clarifiers and associated structures into basin complex and common wall construction	0
AS-10	Hang aeration manifold piping off walls	4
AS-11	Loop aeration piping to isolate sections of the air header	0
Secondary Clarification (SC)		
SC-01	Replace two clarifiers with one	1
SC-02	Eliminate secondary's	0
SC-03	Change design/shape/etc. to facilitate future treatment regulations	0

Earth Systems Pacific

FAULT INVESTIGATION REPORT
GOLETA SANITARY DISTRICT
WASTEWATER TREATMENT PLANT UPGRADE
GOLETA AREA OF SANTA BARBARA COUNTY
CALIFORNIA

Consulting Engineers and Geologists

Earth Systems Pacific

4378 Old Santa Fe Road
San Luis Obispo, CA 93401-8116

(805) 544-3276 • FAX (805) 544-1786
E-mail: esc@earthsys.com

August 3, 2009

File No.: SL- 15835-GA

Mr. James R. Steele
Tetra Tech, Inc.
301 Mentor Drive, Suite A
Santa Barbara, CA 93111-3339

PROJECT: GOLETA SANITARY DISTRICT
WASTEWATER TREATMENT PLANT UPGRADE
GOLETA AREA OF SANTA BARBARA COUNTY, CALIFORNIA

SUBJECT: Fault Investigation Report

REF: Proposal for a Geologic Fault Study, Goleta Sanitary District, Wastewater Treatment Plant Upgrade, Southeast of Fowler Road and Moffett Place, Goleta Area of Santa Barbara County, California, by Earth Systems Pacific, Doc. No. 0904-021.PRP, dated April 15, 2009

Dear Mr. Steele:

In accordance with your authorization of the above-referenced proposal, this report presents the results of our fault investigation for the proposed Goleta Sanitary District Wastewater Treatment Plant Upgrade project located southeast of Fowler Road and Moffett Place in the Goleta area of Santa Barbara County, California. This report is based upon the results of our review of geologic maps and literature, and field exploration. In the report we describe the general field exploration methodology, the geologic characteristics observed within the fault trenches, and provide conclusions with respect to faulting at the site. As requested, 20 bound and five electronic (via CD) copies of this report have been furnished for your use.

We appreciate the opportunity to have provided geologic services for this project and look forward to working with you again in the future. If there are any questions concerning this report, please do not hesitate to contact the undersigned.

Sincerely,

Earth Systems Pacific

Richard T. Gorman, C.E.G.

PROFESSIONAL GEOLOGIST
RICHARD T. GORMAN
No. CEG 1325
CERTIFIED ENGINEERING GEOLOGIST
STATE OF CALIFORNIA

Doc. No.: 0907-162.RPT/rw

TABLE OF CONTENTS

		Page
1.0	INTRODUCTION	1
	Planned Development\Purpose of Project	1
	Scope of Services	2
	Site Setting	2
2.0	FIELD INVESTIGATION	2
	Exploratory Trench Excavations	2
	Stratigraphy	3
	Geologic Features/Structure	4
	Groundwater	5
3.0	GEOLOGY	5
	Geologic Setting	5
	More Ranch Fault	6
4.0	CONCLUSIONS	7
	Discussion	7
	Presence or Absence of Faulting	7
	Geologic Cross Section	8
5.0	RECOMMENDATIONS	8
6.0	CLOSURE	8
	REFERENCES	10

Appendices

APPENDIX A	Vicinity Map Site Map Trench Logs
APPENDIX B	Boring Logs Cross Section A–A'

1.0 INTRODUCTION

Planned Development\Purpose of Project

The Goleta Sanitary District is planning to upgrade its wastewater treatment facility (referred to herein as "the site") located southeast of Fowler Road and Moffett Place in the Goleta area of Santa Barbara County, California. The site is shown on the Vicinity Map in Appendix A. The site coordinates are latitude 34.42215 and longitude -119.83242.

We understand the project will generally consist of constructing the new facility structures with associated surface and subsurface improvements in four different areas of the site (referred to herein as Areas 1, 2, 3, and 4). Mapped traces of the More Ranch fault were identified on published geologic maps crossing the southern end of Area 1 and along the north and south ends of Area 3. The mapped traces of this fault are approximate as they have not been confirmed by fault trench investigations in the vicinity of the structures planned for this project.

The actual locations of three traces of the More Ranch fault were identified in a 2005 fault investigation by Simmons near the site on the west side of Moffett Place immediately west and southwest of the site boundary (Simmons, 2005). Two of the fault traces identified by Simmons trend east-west and northeast-southwest, respectively, directly into the southern area of the site near Area 3. The Santa Barbara County Seismic Safety and Safety Element (County of Santa Barbara, 1991) classifies the More Ranch fault as an active fault. Based on a review of the same evidence presented in this safety element for active faulting on the More Ranch fault, the California Department of Conservation Division of Mines and Geology (CDCDMG) did not recommend that a Fault Hazard Zone be established for the More Ranch fault (CDCDMG, 1977), implying that the fault is not active. Studies conducted by geologists Thomas W. Dibblee, Jr. (1966 and 1987) and by Larry Gurrola (2002, rev. 2004) indicate that the More Ranch fault should be considered active.

Based on the above information, this geologic fault investigation was performed to determine if any traces of the More Ranch fault are near the proposed structures planned for Areas 1 and 3 at the site. The scope of services to accomplish this geologic fault investigation is as follows.

Scope of Services

The scope of work for this geologic fault investigation included a general site reconnaissance, review of available geologic reports and maps of the immediate vicinity, interpretation of the subsurface information derived from the detailed logging of two exploratory fault trenches, evaluation of the data collected, and preparation of this report.

The scope of our services did not include determination of percolation rates, soils engineering properties, soil corrosion potential, environmental assessment, or environmental investigation for the presence or absence of hazardous or toxic materials in the soil, surface water, groundwater or air, on, below, or around the site.

Site Setting

The site is southeast of the intersection of Fowler Road and Moffett Place in the Goleta area of Santa Barbara County, California. Moffett Place provides access to the site. In general, the areas to the north, south, and east are undeveloped properties or open space; the area to the west is the Santa Barbara Municipal Airport. The site currently supports various structures and improvements associated with the current operations of the wastewater treatment facility. Beyond the graded slopes constructed to accommodate elevation splits, the site is relatively flat to gently sloping with drainage-by-sheet flow.

2.0 FIELD INVESTIGATION

Exploratory Trench Excavations

On July 13 through July 16, 2009, two exploratory trenches were excavated on site to determine if any traces of the More Ranch fault trended across Areas 1 and 3. The trenches were excavated utilizing a truck mounted excavator with a 36-inch wide bucket. The trench sidewalls were stabilized by benching at a 1 to 1 (horizontal to vertical), or flatter, slope angle, depending on the geologic and/or soil conditions of the trench sidewalls.

Borings drilled in Area 1 for the Soils Engineering Report (Earth Systems Pacific, 2009) indicated that groundwater and bedrock was approximately 20 and 25 feet, respectively, below the existing ground surface. Therefore, from an economic and feasibility viewpoint, the northern fault trench (Trench 1) was excavated approximately 420 feet west of Area 1 due to shallow

bedrock conditions present in this area. The length of Trench 1 was approximately 115 feet with the depth ranging from 10 to 17.5 feet below the existing ground surface. The southern fault trench (Trench 2) was excavated in Area 3 within a flat sludge drying bed covered by an asphalt paved surface. It was approximately 120 feet long and 9 to 10 feet deep. The locations of the two fault trenches are plotted on the Site Map in Appendix A. The materials encountered in the trenches were logged by a Certified Engineering Geologist. Copies of Trenches 1 and 2 are also presented in Appendix A.

Stratigraphy

Northern Fault Trench (Trench 1)

The materials exposed in Trench 1 consisted of silty sand and poorly graded sand fill which were present across the entire length of the trench. The fill was underlain by a poorly graded sand Holocene alluvium. A massive to thickly bedded, severely weathered, lower Pleistocene-upper Pliocene siltstone was encountered below the alluvium. In a northerly direction, the siltstone bedrock graded to silty sandstone and then to a silty claystone. At Station 40, the alluvium gently slopes upward towards the ground surface and pinches out. As the alluvium slopes upward, a Holocene dune sand layer emerges below the alluvium. At Station 75, there is a break in the ground surface topography as it gently slopes to the north. The dune sand and underlying siltstone bedrock also slope to the north. At Station 80, Holocene estuarine deposits begin above the dune sand. The estuarine deposits consist of dark brown to black, interlayered, poorly graded sand and sandy clay. The contact between the estuarine deposits and dune sand appears to be gradational or inter-fingering. See Trench 1 in Appendix A

Southern Fault Trench (Trench 2)

The materials exposed in Trench 2 consisted of a thin layer of clayey sand with gravel fill that was present across the entire length of the trench. The fill was underlain by a clayey sand Holocene alluvium. The alluvium is interlayered with a 2-foot thick bed of Holocene dune sand that was underlain by a silty sand alluvium. A massive to thickly bedded, severely weathered and oxidized lower Pleistocene-upper Pliocene siltstone was encountered below the alluvium. The siltstone transitions from oxidized to an unoxidized condition with depth. From Station 55 to Station 65, the alluvium and dune sand units gently slope upward toward the ground surface and

then pinch out. During the course of the pinch out, a mottled light grey to orange older dune sand bed emerges. This dune sand bed is approximately 2 feet thick and extends to the northern end of the trench. At Station 70, a 9-inch thick sandstone bed was present. The sandstone bed had a northeast strike and 25 degree dip to the northwest. See Trench 2 in Appendix A

Geologic Features/Structure

Northern Fault Trench (Trench 1)

From Station 5 to Station 15, cobble size, sandy clay rip-clasts were observed along alluvium/siltstone bedrock contact. Rip-up clasts were also observed just below the dune sand/ silty claystone bedrock contact in the area of Station 60. These sedimentary structures or clasts were ripped up from a mud or clay bed by strong currents and transported to a new depositional site. In the vicinity of Station 25, a soft sedimentary deformation structure was observed. This structure appears to be a load-flow structure that sank into the underlying siltstone bedrock unit. The top or over-lying unit consists of a silty sandstone. The contact surrounding the silty sandstone is gradational or diffused. A thin layer of rip-up clasts was observed at Station 30. This layer has a northeast trend with a northwest dip which is consistent with the bedding attitudes in the vicinity of the site. Light gray clay-filled partings were observed in the bedrock throughout trench. Some of the partings extended down to the bottom of the trench while others only extended down a few feet from the top of the bedrock contact. In addition, most of the partings did not extend across the trench into the opposite trench sidewall. The clay-filled partings varied from near vertical, to warped or titled with thin veins branching from the main parting. The partings ranged in width from 1/4 inch to 3 inches. The majority of the light gray clay deposits and partings were confined to the upper two feet of the bedrock, which suggests that these features may be clay in-filled desiccation cracks.

No evidence of geologic features suggestive of faulting, such as shears, gouge zones or offset bedding, were observed in the trench sidewalls.

Southern Fault Trench (Trench 2)

Jointing features were observed throughout the trench. The joints had a general trend of north 58° east with a dip ranging from 75° to the northwest to vertical. A 2-foot wide fracture zone was observed on the west trench sidewall. The fractures had a general trend of north 85° east

with a 65° northwest dip. One of the fractures had a ½-inch spacing. The fracture zone was not present of the east trench sidewall. It is unclear what caused this fracture zone but possibilities include: 1) lurching due to strong ground shaking may have occurred along a system of joints, or 2) ground surface stress produced during the grading and excavation of this area. Rip-up clasts were observed along the sand dune/bedrock contact from Station 64 to Station 81. The rip-up clasts were cobble size, sub-rounded consisting predominantly of sandy clay with abundant marine invertebrate fossils.

No evidence of geologic features suggestive of faulting, such as shears, gouge zones or offset bedding, were observed in the trench.

Groundwater

Northern Fault Trench (Trench 1)

Minor seepage was flowing from the bottom of the trench at a depth of approximately 10 feet from Station 27 to Station 41 and from Station 64 to Station 69. Seepage along the bottom of the trench appeared to be intermittent and is believed to be related to the fluctuation of the ocean tides. Minor seepage was also present along the dune sand-estuary/bedrock contact starting at Station 90.

Southern Fault Trench (Trench 2)

Minor seepage (perched water) was observed along the soil/bedrock contact in several areas of the trench. Minor seepage was also flowing from the bottom of the trench at a depth of approximately 10 feet where the sandstone bed is present at Station 88.

3.0 GEOLOGY

Geologic Setting

The site is located in the southern portion of the Goleta Valley in the coastal plain of southern Santa Barbara County. The Goleta Valley is approximately 8 miles long from west to east, and ranges in width from approximately 0.25 mile in the west to almost 3 miles from north to south in the central area near Fairview Avenue. The Goleta Valley comprises alluvial plains on the east, north, and west that slope gently south and merge into the Goleta Slough in the south-central portion of the valley and drain to the ocean past Mescalitan Island. The Goleta Valley is

bounded on the south and southeast by the nearly continuous terrace formed by More Mesa, Goleta Mesa, and Mescalitan Island. This terrace is composed of impermeable rocks, stands 50 to 150 feet above sea level, and is trenched at the outlet of Goleta slough south of Mescalitan Island and at a smaller outlet about 3 miles farther west at Devereux Slough. Otherwise, it forms a continuous barrier across the entire seaward side of the Goleta basin.

Locally the site is situated on the remnant of the northeast portion of Mescalitan Island and adjacent areas to the north and east of Mescalitan Island in the southern portion of the Goleta Slough. Mescalitan Island is underlain by an unnamed siltstone unit (lower Pleistocene and possibly upper Pliocene) that is described as massive and extensively bioturbated siltstone, claystone, and silty sandstone that contains marine fossils with an exposed thickness of about 45 meters (147 feet). The northern area of site within the Goleta Slough is shown as underlain by Holocene estuarine deposits described as locally organic-rich clay, silt, and subordinate sand deposited primarily in peritidal environment in low-lying coastal areas of modern and historically active sloughs, with a maximum thickness probably less than 20 meters (65 feet).

More Ranch Fault

Minor and others (2007) show the More Ranch fault trending roughly east-west along the southern site boundary by Area 3 (passing through the southeast corner of the site), and bifurcating into two branches with the upper-siliceous member of the Miocene Monterey Formation exposed to the south of the southern fault trace. Gurrola (2002, revised 2004) shows a north and south trace of the More Ranch fault. The southern trace trends roughly northeast-southwest along the southern site boundary (passing through the southeast corner of the site, south of Area 3), as shown on the Site Map in Appendix A. The northern fault trace trends roughly northeast-southwest along the remnant of the north escarpment of Mescalitan Island, crossing the southern end of Area 1. Dibblee (1987) only shows a single trace of the More Ranch fault trending roughly east-west along the southern site boundary with the south side upthrown (passing through the southeast corner of the site and Area 3). Upson (1951) shows two inferred traces of the More Ranch fault. The southern fault trace trends roughly east-west along the southern site boundary, north of Area 3, while the northern fault trace is located along the north escarpment of Mescalitan Island, just south of Area 1.

4.0 CONCLUSIONS

Discussion

The fault trenching performed in Areas 1 and 3 and borings drilled in Area 1, 2 and 3 for the soil engineering report (Earth Systems Pacific, 2009) provides a basis for interpreting the stratigraphy and characteristics of the geologic features\structures. Specifically, the observations and measurements from the fault investigation, combined with data and observations from the literature and from the soils engineering report provide a basis for determining the presence or absence of faulting in Areas 1 and 3.

Presence or Absence of Faulting

Based on the information obtained from the above mentioned sources, it is our judgment that the two exploratory fault trenches did not expose any structures or geologic features suggesting that there is evidence of faulting (of tectonic origin) in Areas 1 and 3. The trenches exposed Holocene age dune sand that Tom Rockwell suggests is 6,000 years old (Scientific Resource Surveys, Inc., 1985) which represent a higher sea level. Minor and others (2007) indicate that the bedrock exposed in the two fault trenches is lower Pleistocene-upper Pliocene Age. Therefore, if active faulting was present in the vicinity of Areas 1 and 3, the age of the geologic units exposed in the fault trenches would be old enough to exhibit such tectonic fault features as offset geologic units, gouge zones, or shears with slicken sided surfaces. None of these features were observed in the two fault trenches.

It is our understanding that the northern trace of the More Ranch fault crossing the southern part of Area 1 was based on a break-in-slope or the remnant of the north escarpment feature along Mescalitan Island and the southern end of Area 1 (Gurrola, rev. 2004). A break-in-slope or escarpment (scarp) feature on the ground surface is suggestive of active faulting. However, a break-in-slope or scarp feature is also suggestive of an erosional feature such as a bank that forms in areas where there is a creek, river, or a body of water such as the Goleta Slough. Adjacent to Area 1, a finger of the Goleta Slough is present. The north end of Trench 1 exposed a gently sloping bedrock surface or bank with several narrow erosional terraces in the face of the bank, see Trench 1. The sloping bank and terrace features were formed by erosion which also created the break in slope or scarp feature on southern part of Area 1. No evidence of tectonic fault-

related features such as shears, gouge zones or offset geologic units were observed in the northern part of the Trench 1.

Geologic Cross Section

Cross Section A-A' was prepared using the subsurface soil/bedrock profiles obtained from the hollow stem borings drilled in Areas 1, 2 and 3, from the soils engineering report. The site map in Appendix A shows the location of both the borings and Cross Section A-A'. The boring logs and Cross Section A-A' are presented in Appendix B. Cross Section A-A' exhibits the same topographic and stratigraphic profile as the profile observed in Trench 1, which includes a sloping bedrock surface that extends from Boring 4 in Area 1 to Boring 9 in Area 2. The soil/bedrock profile in Cross Section A-A' is also similar to the one observed in Trench 1. No break or offset of geologic units suggestive of tectonic faulting were encountered in the borings drilled in Areas 1 and 2.

5.0 RECOMMENDATIONS

Due to the absence of tectonic fault-related features in Trench 1 in Area 1 and Trench 2 in Area 3, no building setbacks are recommended at this time.

6.0 CLOSURE

The conclusions and recommendations of this report are based on data acquired and evaluated during this study and are intended to apply only to the proposed development of the project as described in the "Introduction" section of this report. This report is valid for conditions as they exist at this time for the type of project described herein. If changes with respect to project type or location become necessary, if items not addressed in this report are incorporated into plans, or if any of the assumptions used in the preparation of this report are not correct, this firm shall be notified for modifications to this report.

The conclusions presented in this report are based upon the assumption that the site geologic conditions do not deviate substantially from those disclosed during our research and field exploration. If any variations or undesirable conditions are encountered during construction, or if the proposed construction will differ from that planned at the present time, Earth Systems Pacific should be notified so that supplemental recommendations can be prepared as applicable.

Our intent was to perform this study in a manner consistent with the level of care and skill commonly exercised by members of the profession currently practicing in the locality of this project under similar conditions. No representation, warranty, or guarantee is either expressed or implied. This report is intended for the exclusive use by the client for the subject project. Application beyond the stated intent is strictly at the user's risk.

This document, the data, conclusions, and recommendations contained herein are the property of Earth Systems Pacific. This report shall be used in its entirety, with no individual sections reproduced or used out of context. Copies may be made only by Earth Systems Pacific, the client, and the client's authorized agents for use exclusively on the subject project. All other rights are retained by Earth Systems Pacific and any other use is subject to federal copyright laws and the written approval of Earth Systems Pacific.

End of Text.

APPENDIX A

Vicinity Map
Site Map
Trench Logs

VICINITY MAP

GOLETA SANITARY DISTRICT
WASTEWATER TREATMENT PLANT UPGRADE
Southeast of Fowler Road and Moffet Place
Goleta Area of Santa Barbara County, California

Site Coordinates
Lat.: 34.42215
Long.: -119.83242

USGS 7.5 min. Quadrangle, Goleta, California

Approx. Scale: 1" = 1500'

EARTH SYSTEMS PACIFIC
(805) 544-3276 - Fax (805) 544-1786
4378 Old Santa Fe Road, San Luis Obispo, CA 93401
www.earthsys.com - email: esc@earthsys.com

February 2009

SL-15835-SA

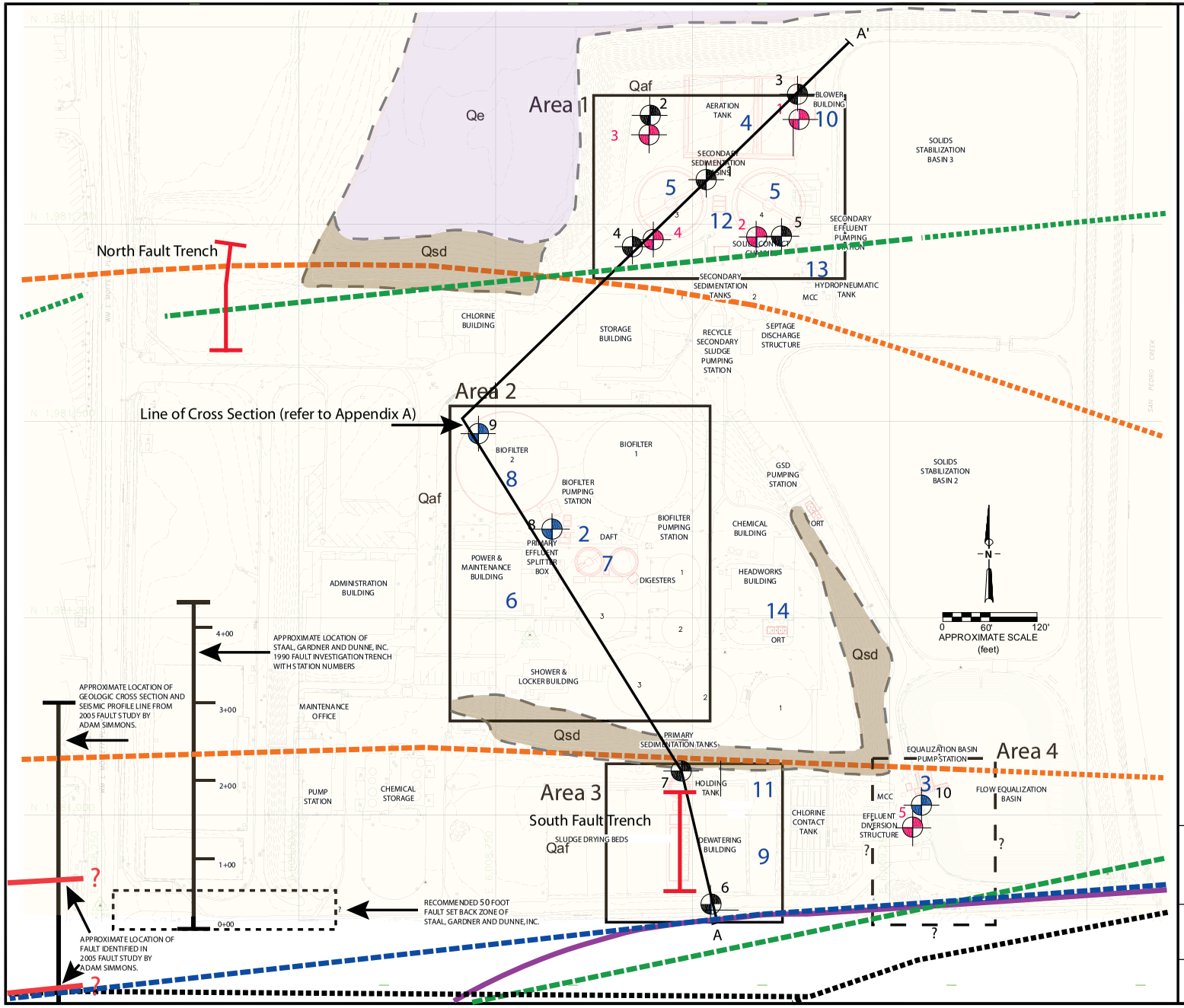

LEGEND

Elevation contour (feet above mean sea level)

Existing structure

Proposed new structure. Structure Number shown on Proposed Projects Improvements list on page 1 of report.

MAPPED FAULTS

Approximate centerlines of mapped fault traces were placed on Figure 4 by interpolation from the original geologic map sources listed below. The fault traces are shown as solid lines where interpreted as exposed at ground surface, long dashed lines where approximately located, and short dashed lines where blind or concealed . Refer to Figure 6 to view the mapped fault traces in relation to the surrounding area.

- *Geologic Map of the Goleta Quadrangle, Santa Barbara County, California,* US Geological Survey Open File Report 2007-1403 (Minor, S., K. Kellogg, R. Stanley, and T. Brandt 2007).
- *Geologic Map of the Western Santa Barbara Fold Belt* (Gurrola, L. October 2002, Revised October 2004).
- *Geologic Map of the Goleta Quadrangle, Santa Barbara County, California,* US Geological Survey Open File Report 2007-1403 (Dibblee, T.W. Jr. 1987).
- *Plate I Geologic Map of the Santa Barbara Area, California,* (Olsen, D.J. 1982).
- *Plate 1 Geologic Map and Sections of the Goleta Basin and Vicinity, Santa Barbara County, California,* US Geological Water Supply Paper 1108 (Upson, J.E. 1951).

EXPLORATORY BORINGS

1 Hollow stem auger boring drilled December 2008 .

1 Cone penetrometer boring drilled January 2009 .

10 Hollow stem auger boring drilled March 2009.

FAULT INVESTIGATION TRENCH

EARTH MATERIALS

Earth material contact (approximate)

Qaf Artificial Fill (Holocene) Derived from native materials, and imported materials including gravel, concrete, and asphalt.

Qe Estuarine Deposits (Holocene) Locally organic-rich clay, silt, and subordinate sand deposited primarily in paratidal environment in low lying coastal areas of modern and historically active sloughs. Maximum thickness probably less than 20 meters.

Qsd Old Sand Dune Deposits (Holocene) Stabilized sand dune deposits laid down since 6,000 years B.P. Contains marine fossils and cultural remains.

Notes:
1. Drawing base map from Drawing No. C-1 Plant Layout and Survey Control, 60 % Submittal, HDR Engineering December 2009.
2. Earth materials descriptions from *Geologic Map of the Goleta Quadrangle, Santa Barbara County, California,* US Geological Survey Open File Report 2007-1403 (Minor, S., Kellogg, K., Stanley, R., and Brandt, T. 2007) and Scientific Resource Surveys, Inc. 1985.
3. Distribution of earth materials based on field interpretation October and December 2008.

PROPOSED FAULT INVESTIGATION TRENCHES
GOLETA SANITARY DISTRICT
GOLETA, CALIFORNIA

Tetra Tech, Inc. Santa Barbara, CA
301 Mentor Drive, Suite A
Santa Barbara, CA 93111

TC#	DATE	DRAWN BY	DRAWING NO.	FIGURE NO.
23315-05	1/24/09	STEELE		7

CROSS SECTION A-A'

GOLETA SANITARY DISTRICT
WASTEWATER TREATMENT PLANT UPGRADE
Southeast of Fowler Road and Moffet Place
Goleta Area of Santa Barbara County, California

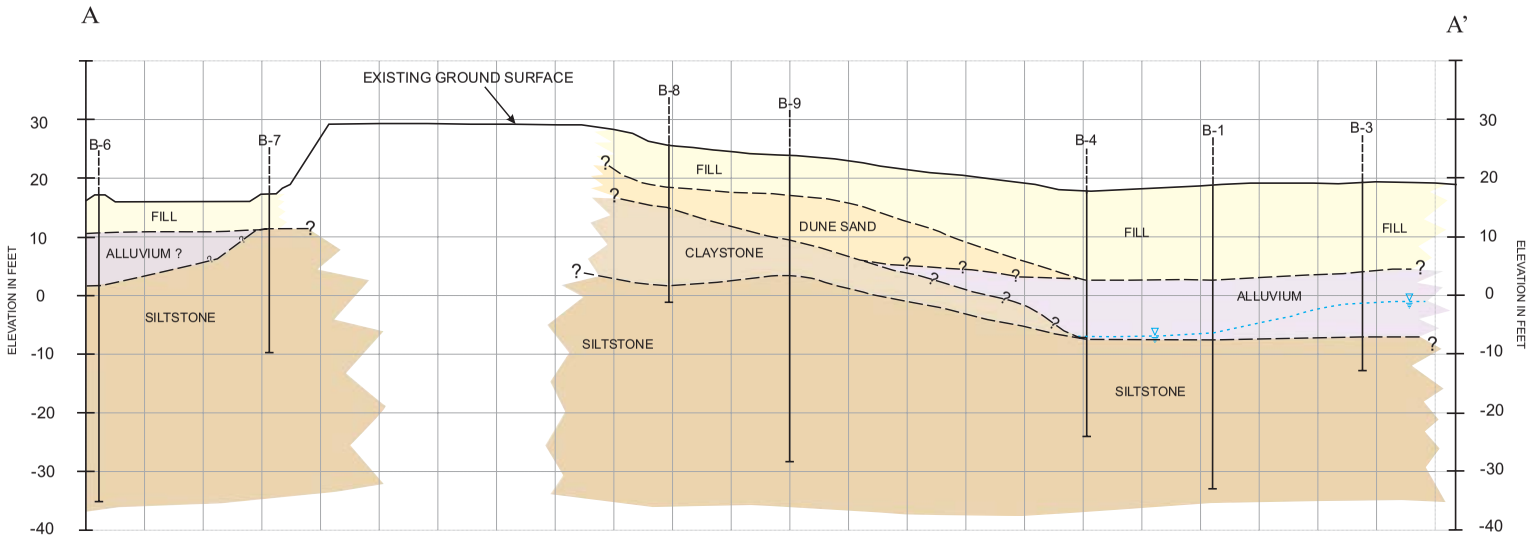

LEGEND

Geologic Contact

Subsurface Water

HORIZONTAL SCALE: 1" = 60', VERTICAL SCALE: 1" = 10'

EARTH SYSTEMS PACIFIC

4378 Old Santa Fe Road, San Luis Obispo, CA 93401

(805) 544-3276 - Fax (805) 544-1786

www.earthsys.com - email: esc@earthsys.com

April 2009

SL-15835-SA

APPENDIX B

Boring Logs
Cross Section A–A'

Earth Systems Pacific

Boring No. 1

LOGGED BY: R. Wagner
DRILL RIG: Mobile Drill, Model B-53, with Automatic Hammer
AUGER TYPE: 8" Hollow Stem

JOB NO.: SL-15835-SA
DATE: 12/15/08

GOLETA WASTEWATER TREATMENT PLANT UPGRADE
Southeast of Fowler Road & Moffett Place
Goleta Area of Santa Barbara County, California

DEPTH (feet)	USCS CLASS	SYMBOL	SOIL DESCRIPTION	SAMPLE DATA: INTERVAL (feet)	SAMPLE TYPE	DRY DENSITY (pcf)	MOISTURE (%)	BLOWS PER 6 IN.
0			4.0" asphalt concrete over 7.5" aggregate base					
1	CL		SANDY LEAN CLAY: dark gray brown, very stiff, moist, (FILL)	1.0–3.0	○			
5				5.0–6.5	■	103.0	22.2	7 12 17
10			blue/gray/brown mottled, stiff	10.0–11.5	■	106.2	19.2	4 7 12
15			medium stiff	15.0–16.5	■	91.5	26.0	3 5 6
16	SP		POORLY GRADED SAND: dark blue/gray mottled, loose, very moist, fine-grained, trace clay, trace shells (ALLUVIUM)					
20				20.0–21.5	■	NO RETURN		2 5 7
25			saturated	25.0–26.5	■	101.0	24.3	9 17 22
26			SILTSTONE: dark grey, soft, wet					

LEGEND: ■ Ring Sample ○ Grab Sample ▭ Shelby Tube Sample ● SPT

NOTE: This log of subsurface conditions is a simplification of actual conditions encountered. It applies at the location and time of drilling. Subsurface conditions may differ at other locations and times.

Earth Systems Pacific

Boring No. 1

LOGGED BY: R. Wagner
DRILL RIG: Mobile Drill, Model B-53, with Automatic Hammer
AUGER TYPE: 8" Hollow Stem

JOB NO.: SL-15835-SA
DATE: 12/15/08

GOLETA WASTEWATER TREATMENT PLANT UPGRADE
Southeast of Fowler Road & Moffett Place
Goleta Area of Santa Barbara County, California

DEPTH (feet)	USCS CLASS	SYMBOL	SOIL DESCRIPTION	SAMPLE DATA: INTERVAL (feet)	SAMPLE TYPE	DRY DENSITY (pcf)	MOISTURE (%)	BLOWS PER 6 IN.
27			SILTSTONE: as above					
28								
29								
30				30.0–31.5	Ring Sample	101.1	24.2	7 11 14
31								
32								
33								
34								
35			trace shell fragments	35.0–36.5	SPT			2 8 21
36								
37								
38								
39								
40				40.0–41.5	SPT			3 4 6
41			blue gray, very moist					
42								
43								
44								
45			dark green gray	45.0–46.5	SPT			2 4 5
46								
47								
48								
49								
50				50.0–51.5	SPT			3 4 5
51								
52			End of Boring @ 51.5' Subsurface water encountered @ 25.0'					
53								

LEGEND: ■ Ring Sample ○ Grab Sample ▭ Shelby Tube Sample ● SPT

NOTE: This log of subsurface conditions is a simplification of actual conditions encountered. It applies at the location and time of drilling. Subsurface conditions may differ at other locations and times.

Earth Systems Pacific

Boring No. 2

LOGGED BY: R. Wagner
DRILL RIG: Mobile Drill, Model B-53, with Automatic Hammer
AUGER TYPE: 8" Hollow Stem

JOB NO.: SL-15835-SA
DATE: 12/15/08

GOLETA WASTEWATER TREATMENT PLANT UPGRADE
Southeast of Fowler Road & Moffett Place
Goleta Area of Santa Barbara County, California

DEPTH (feet)	USCS CLASS	SYMBOL	SOIL DESCRIPTION	SAMPLE DATA: INTERVAL (feet)	SAMPLE TYPE	DRY DENSITY (pcf)	MOISTURE (%)	BLOWS PER 6 IN.
0			5.5" asphalt concrete over 9.0" aggregate base					
1								
2	CL		SANDY LEAN CLAY: dark brown/dark gray mottled, stiff, moist (FILL)					
3								
4								4
5			interlayered with thin lenses of sandy fat clay	5.0–6.5	■	99.1	26.0	11 13
6								
7								
8								
9								4
10			olive gray/gray brown mottled, trace shell fragments	10.0–11.5	■	99.6	23.6	7 10
				10–13	○			
11								
12								
13								
14								5
15	CL		SANDY LEAN CLAY; olive gray/gray brown mottled, stiff, moist, interlayered with thin lenses of clayey sand (ALLUVIUM)	15.0–16.5	■	106.8	18.7	8 12
16								
17								
18								
19								2
20			medium stiff, interlayered with thin lenses of peat	20.0–21.5	■	67.1	49.0	4 4
21								
22								
23								
24								6
25			SILTSTONE: dark gray, soft, very moist, trace shell fragments	25.0–26.5	●			10 13
26								

LEGEND: ■ Ring Sample ○ Grab Sample ▭ Shelby Tube Sample ● SPT

NOTE: This log of subsurface conditions is a simplification of actual conditions encountered. It applies at the location and time of drilling. Subsurface conditions may differ at other locations and times.

Earth Systems Pacific

Boring No. 2

LOGGED BY: R. Wagner
DRILL RIG: Mobile Drill, Model B-53, with Automatic Hammer
AUGER TYPE: 8" Hollow Stem

JOB NO.: SL-15835-SA
DATE: 12/15/08

GOLETA WASTEWATER TREATMENT PLANT UPGRADE
Southeast of Fowler Road & Moffett Place
Goleta Area of Santa Barbara County, California

DEPTH (feet)	USCS CLASS	SYMBOL	SOIL DESCRIPTION	SAMPLE DATA: INTERVAL (feet)	SAMPLE TYPE	DRY DENSITY (pcf)	MOISTURE (%)	BLOWS PER 6 IN.
27			SILTSTONE: dark gray, soft, wet, trace shell fragments					
28								
29								
30				30.0–31.5	●			9 13 17
31								
32			End of Boring @ 31.5' Subsurface water encountered @ 27.0'					
33								
34								
35								
36								
37								
38								
39								
40								
41								
42								
43								
44								
45								
46								
47								
48								
49								
50								
51								
52								
53								

LEGEND: ■ Ring Sample ◯ Grab Sample ▭ Shelby Tube Sample ● SPT

NOTE: This log of subsurface conditions is a simplification of actual conditions encountered. It applies at the location and time of drilling. Subsurface conditions may differ at other locations and times.

Earth Systems Pacific

Boring No. 3
PAGE 1 OF 2
JOB NO.: SL-15835-SA
DATE: 12/15/08

LOGGED BY: R. Wagner
DRILL RIG: Mobile Drill, Model B-53, with Automatic Hammer
AUGER TYPE: 8" Hollow Stem

GOLETA WASTEWATER TREATMENT PLANT UPGRADE
Southeast of Fowler Road & Moffett Place
Goleta Area of Santa Barbara County, California

DEPTH (feet)	USCS CLASS	SYMBOL	SOIL DESCRIPTION	SAMPLE DATA: INTERVAL (feet)	SAMPLE TYPE	DRY DENSITY (pcf)	MOISTURE (%)	BLOWS PER 6 IN.
0			5.5" asphalt concrete over 9.0" aggregate base					
1	CL		SANDY LEAN CLAY: dark brown/dark gray mottled, stiff, moist (FILL)					
2								
3								
4								
5			dark brown/dark gray mottled, trace shell fragments	5.0–6.5	■	98.1	24.1	5 9 14
6								
7								
8								
9								
10			green/black/brown mottled, soft, trace organic material, debris	10.0–11.5	■	93.1	25.4	2 3 4
11								
12								
13								
14								
15	CL		SANDY LEAN CLAY: olive brown, soft, moist, (ALLUVIUM)	15.0–16.5	■	90.0	30.3	1 3 4
16								
17								
18								
19								
20	SM		SILTY SAND: dark brown, loose, saturated, very fine-grained	20.0–21.5	■	NO RETURN		2 4 5
21								
22								
23								
24	SP		POORLY GRADED SAND: dark gray, medium dense, saturated	25.0–26.5	●	NO RETURN		4 6 6
25								
26			SILTSTONE: dark gray, soft, wet					

LEGEND: ■ Ring Sample ○ Grab Sample ▭ Shelby Tube Sample ● SPT

NOTE: This log of subsurface conditions is a simplification of actual conditions encountered. It applies at the location and time of drilling. Subsurface conditions may differ at other locations and times.

Earth Systems Pacific

Boring No. 3

LOGGED BY: R. Wagner
DRILL RIG: Mobile Drill, Model B-53, with Automatic Hammer
AUGER TYPE: 8" Hollow Stem

JOB NO.: SL-15835-SA
DATE: 12/15/08

GOLETA WASTEWATER TREATMENT PLANT UPGRADE
Southeast of Fowler Road & Moffett Place
Goleta Area of Santa Barbara County, California

DEPTH (feet)	USCS CLASS	SYMBOL	SOIL DESCRIPTION	SAMPLE DATA: INTERVAL (feet)	SAMPLE TYPE	DRY DENSITY (pcf)	MOISTURE (%)	BLOWS PER 6 IN.
27			SILTSTONE: as above					
28								
29								
30			flow sands in auger	30.0–31.5	●			9 28 40
31								
32			End of Boring @ 31.5' Subsurface water encountered @ 20.0'.					
33								
34								
35								
36								
37								
38								
39								
40								
41								
42								
43								
44								
45								
46								
47								
48								
49								
50								
51								
52								
53								

LEGEND: ■ Ring Sample ○ Grab Sample ▭ Shelby Tube Sample ● SPT

NOTE: This log of subsurface conditions is a simplification of actual conditions encountered. It applies at the location and time of drilling. Subsurface conditions may differ at other locations and times.

Earth Systems Pacific

Boring No. 4

LOGGED BY: R. Wagner
DRILL RIG: Mobile Drill, Model B-53, with Automatic Hammer
AUGER TYPE: 8" Hollow Stem

JOB NO.: SL-15835-SA
DATE: 12/16/08

GOLETA WASTEWATER TREATMENT PLANT UPGRADE
Southeast of Fowler Road & Moffett Place
Goleta Area of Santa Barbara County, California

DEPTH (feet)	USCS CLASS	SYMBOL	SOIL DESCRIPTION	SAMPLE DATA: INTERVAL (feet)	SAMPLE TYPE	DRY DENSITY (pcf)	MOISTURE (%)	BLOWS PER 6 IN.
0			4.0" asphalt concrete over 9.5" aggregate base					
1	CL		SANDY LEAN CLAY: dark brown, stiff, moist, (FILL)					
2								
3								
4								
5				5.0–6.5	■	103.9	21.2	4 10 10
			dark brown/dark gray mottled, moist, trace shell fragments					
6								
7								
8								
9								
10				10.0–11.5	■	102.5	22.3	3 7 11
11			interlayered with thin lenses of poorly graded sand					
12								
13								
14								
15	CL		SANDY LEAN CLAY: dark olive brown, medium stiff, some fine roots (ALLUVIUM)	15.0–16.5	■	78.8	40.9	3 4 5
16								
			thin peat layer					
17								
18								
19								
20	SP–SM		POORLY GRADED SAND WITH SILT: dark gray, loose, very moist, fine-grained, trace fine roots, trace clay	20.0–21.5	■	85.7	28.9	2 4 8
21								
22								
23								
24								
25			SILTSTONE: olive brown, soft, wet, trace shell fragments ▼	25.0–26.5	●			5 7 6
26								

LEGEND: ■ Ring Sample ○ Grab Sample ▭ Shelby Tube Sample ● SPT

NOTE: This log of subsurface conditions is a simplification of actual conditions encountered. It applies at the location and time of drilling. Subsurface conditions may differ at other locations and times.

Earth Systems Pacific

Boring No. 4

LOGGED BY: R. Wagner
DRILL RIG: Mobile Drill, Model B-53, with Automatic Hammer
AUGER TYPE: 8" Hollow Stem

JOB NO.: SL-15835-SA
DATE: 12/16/08

GOLETA WASTEWATER TREATMENT PLANT UPGRADE
Southeast of Fowler Road & Moffett Place
Goleta Area of Santa Barbara County, California

DEPTH (feet)	USCS CLASS	SYMBOL	SOIL DESCRIPTION	SAMPLE DATA: INTERVAL (feet)	SAMPLE TYPE	DRY DENSITY (pcf)	MOISTURE (%)	BLOWS PER 6 IN.
27			SILTSTONE: as above					
28								
29								
30				30.0–31.5	●			3 5 7
31								
32								
33								
34				35.0–36.5	●			5 11 11
35								
36								
37								
38								
39				40.0–41.5	●			3 6 8
40								
41								
42			End of Boring @ 41.5' Subsurface water encountered @ 25.0'					
43								
44								
45								
46								
47								
48								
49								
50								
51								
52								
53								

LEGEND: ■ Ring Sample ○ Grab Sample ▭ Shelby Tube Sample ● SPT

NOTE: This log of subsurface conditions is a simplification of actual conditions encountered. It applies at the location and time of drilling. Subsurface conditions may differ at other locations and times.

Earth Systems Pacific

Boring No. 5

LOGGED BY: R. Wagner
DRILL RIG: Mobile Drill, Model B-53, with Automatic Hammer
AUGER TYPE: 8" Hollow Stem

JOB NO.: SL-15835-SA
DATE: 12/16/08

GOLETA WASTEWATER TREATMENT PLANT UPGRADE
Southeast of Fowler Road & Moffett Place
Goleta Area of Santa Barbara County, California

DEPTH (feet)	USCS CLASS	SYMBOL	SOIL DESCRIPTION	SAMPLE DATA: INTERVAL (feet)	SAMPLE TYPE	DRY DENSITY (pcf)	MOISTURE (%)	BLOWS PER 6 IN.
0			5.0" asphalt concrete over 9.0" aggregate base					
1	CL		SANDY LEAN CLAY: dark brown, stiff, moist, trace shell fragments, trace organics (FILL)					
2								
3								
4								
5			black/dark brown mottled	5.0–6.5	■	116.6	12.4	6 12 11
6								
7								
8								
9								
10			some organics	10.0–11.5	■	104.8	15.0	4 8 8
11								
12								
13								
14								
15	CL		SANDY LEAN CLAY: olive gray, stiff, moist (ALLUVIUM)	15.0–16.5	■	97.6	27.0	5 8 8
16								
17								
18								
19								
20	SP		POORLY GRADED SAND: dark gray, loose, very moist, fine-grained	20.0–21.5	■	NO RETURN		2 6 7
21								
22								
23								
24								
25			SILTSTONE: dark gray, soft, wet, trace shell fragments ▼	25.0–26.5	●			5 9 12
26								

LEGEND: ■ Ring Sample ○ Grab Sample ▭ Shelby Tube Sample ● SPT

NOTE: This log of subsurface conditions is a simplification of actual conditions encountered. It applies at the location and time of drilling. Subsurface conditions may differ at other locations and times.

Earth Systems Pacific

Boring No. 5

LOGGED BY: R. Wagner
DRILL RIG: Mobile Drill, Model B-53, with Automatic Hammer
AUGER TYPE: 8" Hollow Stem

JOB NO.: SL-15835-SA
DATE: 12/16/08

GOLETA WASTEWATER TREATMENT PLANT UPGRADE
Southeast of Fowler Road & Moffett Place
Goleta Area of Santa Barbara County, California

DEPTH (feet)	USCS CLASS	SYMBOL	SOIL DESCRIPTION	SAMPLE DATA: INTERVAL (feet)	SAMPLE TYPE	DRY DENSITY (pcf)	MOISTURE (%)	BLOWS PER 6 IN.
27			SILTSTONE: as above					
28								
29								
30				30.0–31.5	●			2 5 12
31								
32								
33								
34				35.0–36.5	●			9 22 34
35								
36								
37								
38			flow sands in auger					
39			End of Boring @ 38.5' due to flow sands. Subsurface water encountered @ 25.0'.					
40								
41								
42								
43								
44								
45								
46								
47								
48								
49								
50								
51								
52								
53								

LEGEND: ■ Ring Sample ○ Grab Sample ▭ Shelby Tube Sample ● SPT

NOTE: This log of subsurface conditions is a simplification of actual conditions encountered. It applies at the location and time of drilling. Subsurface conditions may differ at other locations and times.

Earth Systems Pacific

Boring No. 6

JOB NO.: SL-15835-SA
DATE: 12/17/08

LOGGED BY: R. Wagner
DRILL RIG: Mobile Drill, Model B-53, with Automatic Hammer
AUGER TYPE: 8" Hollow Stem

GOLETA WASTEWATER TREATMENT PLANT UPGRADE
Southeast of Fowler Road & Moffett Place
Goleta Area of Santa Barbara County, California

DEPTH (feet)	USCS CLASS	SYMBOL	SOIL DESCRIPTION	SAMPLE DATA: INTERVAL (feet)	SAMPLE TYPE	DRY DENSITY (pcf)	MOISTURE (%)	BLOWS PER 6 IN.
0	SC		CLAYEY SAND: gray brown, medium dense, moist, trace fine roots (FILL)					
1								
2				3–5	○			
3								
4								6
5				5.0–6.5	■	105.2	21.1	11 20
6				6–9	○			
7	SP		POORLY GRADED SAND: light gray brown, medium dense, moist, fine–grained, some clay (ALLUVIUM)					
8								
9								4
10				10.0–11.5	■	100.9	24.2	10 12
11	SC		CLAYEY SAND: gray, medium dense, moist, very fine–grained					
12								
13								
14								8
15				15.0–16.5	■	110.3	19.0	16 25
16			SILTSTONE: dark blue/gray mottled, soft, moist, trace shell fragments					
17								
18								
19								7
20				20.0–21.5	■	100.3	25.1	17 23
21								
22								
23								
24								12
25				25.0–26.5	■	108.0	19.9	30 43
26								

LEGEND: ■ Ring Sample ○ Grab Sample ▭ Shelby Tube Sample ● SPT

NOTE: This log of subsurface conditions is a simplification of actual conditions encountered. It applies at the location and time of drilling. Subsurface conditions may differ at other locations and times.

Earth Systems Pacific

Boring No. 6

LOGGED BY: R. Wagner
DRILL RIG: Mobile Drill, Model B-53, with Automatic Hammer
AUGER TYPE: 8" Hollow Stem

JOB NO.: SL-15835-SA
DATE: 12/17/08

GOLETA WASTEWATER TREATMENT PLANT UPGRADE
Southeast of Fowler Road & Moffett Place
Goleta Area of Santa Barbara County, California

DEPTH (feet)	USCS CLASS	SYMBOL	SOIL DESCRIPTION	SAMPLE DATA: INTERVAL (feet)	SAMPLE TYPE	DRY DENSITY (pcf)	MOISTURE (%)	BLOWS PER 6 IN.
27			SILTSTONE: as above					
28								
29								
30				30.0–31.5	Ring	107.3	20.3	12 40 50
31								
32								
33								
34				35.0–36.5	SPT			6 14 19
35								
36								
37								
38								
39				40.0–41.5	SPT			6 12 23
40								
41								
42								
43								
44				45.0–46.5	SPT			8 17 27
45								
46								
47								
48								
49				50.0–51.5	SPT			6 14 21
50								
51								
52			End of Boring @ 51.5' No subsurface water encountered.					
53								

LEGEND: Ring Sample ◯ Grab Sample ▭ Shelby Tube Sample ● SPT

NOTE: This log of subsurface conditions is a simplification of actual conditions encountered. It applies at the location and time of drilling. Subsurface conditions may differ at other locations and times.

Earth Systems Pacific

Boring No. 7

LOGGED BY: R. Wagner
DRILL RIG: Mobile Drill, Model B-53, with Automatic Hammer
AUGER TYPE: 8" Hollow Stem

JOB NO.: SL-15835-SA
DATE: 12/17/08

GOLETA WASTEWATER TREATMENT PLANT UPGRADE
Southeast of Fowler Road & Moffett Place
Goleta Area of Santa Barbara County, California

DEPTH (feet)	USCS CLASS	SYMBOL	SOIL DESCRIPTION	SAMPLE DATA: INTERVAL (feet)	SAMPLE TYPE	DRY DENSITY (pcf)	MOISTURE (%)	BLOWS PER 6 IN.
0			2.75" asphalt concrete over 10.0" aggregate base					
1	SP		POORLY GRADED SAND: light yellow brown, medium dense, moist (FILL)					
2								
3								
4								
5			saturated	5.0–6.5	Ring	102.1	24.4	4 11 15
6			SILTSTONE: dark gray, soft, moist, trace shell fragments					
7								
8								
9								
10				10.0–11.5	Ring	92.9	22.3	7 14 27
11								
12								
13								
14								
15				15.0–16.5	Ring	98.1	23.1	8 25 35
16				15–18	Grab			
17								
18								
19								
20				20.0–21.5	SPT			4 8 12
21								
22								
23								
24				25.0–26.5	SPT			9 10 15
25								
26			End of Boring @ 26.5' Subsurface water encountered between 5.0' to 5.5'.					

LEGEND: ■ Ring Sample ○ Grab Sample □ Shelby Tube Sample ● SPT

NOTE: This log of subsurface conditions is a simplification of actual conditions encountered. It applies at the location and time of drilling. Subsurface conditions may differ at other locations and times.

Earth Systems Pacific

Boring No. 8

LOGGED BY: R. Wagner
DRILL RIG: Mobile Drill, Model B-53, with Automatic Hammer
AUGER TYPE: 8" Hollow Stem

JOB NO.: SL-15835-SA
DATE: 03/17/09

GOLETA WASTEWATER TREATMENT PLANT UPGRADE
Southeast of Fowler Road & Moffett Place
Goleta Area of Santa Barbara County, California

DEPTH (feet)	USCS CLASS	SYMBOL	SOIL DESCRIPTION	SAMPLE DATA: INTERVAL (feet)	SAMPLE TYPE	DRY DENSITY (pcf)	MOISTURE (%)	BLOWS PER 6 IN.
0	SP		POORLY GRADED SAND: dark brown, loose, moist, trace silt (FILL)	1–3	○			
5				5.0–6.5	■	101.8	8.5	2 4 6
7			brown					
8	SP		POORLY GRADED SAND: light brown, loose, moist (DUNE SAND)					
10			very moist (slight seepage from irrigation)	10.0–11.5	■	90.1	30.7	8 7 7
11			CLAYSTONE: light gray, soft, moist, very weathered, iron oxide staining					
15			light gray/light orange brown mottled, thin, chaotic bedding, trace small shells	15.0–16.5	■	90.1	31.8	3 7 10
20				20.0–21.5	■	88.9	32.4	4 6 9
24			SILTSTONE: dark blue gray, soft, moist, trace medium shells	25.0–26.5	●			3 7 9
26			End of Boring @ 26.5' No subsurface water encountered					

LEGEND: ■ Ring Sample ○ Grab Sample ▭ Shelby Tube Sample ● SPT

NOTE: This log of subsurface conditions is a simplification of actual conditions encountered. It applies at the location and time of drilling. Subsurface conditions may differ at other locations and times.

Earth Systems Pacific

Boring No. 9

LOGGED BY: R. Wagner
DRILL RIG: Mobile Drill, Model B-53, with Automatic Hammer
AUGER TYPE: 8" Hollow Stem

JOB NO.: SL-15835-SA
DATE: 3/17/09

GOLETA WASTEWATER TREATMENT PLANT UPGRADE
Southeast of Fowler Road & Moffett Place
Goleta Area of Santa Barbara County, California

DEPTH (feet)	USCS CLASS	SYMBOL	SOIL DESCRIPTION	SAMPLE DATA: INTERVAL (feet)	SAMPLE TYPE	DRY DENSITY (pcf)	MOISTURE (%)	BLOWS PER 6 IN.
0	SP		POORLY GRADED SAND: dark brown, loose, moist, trace silt (FILL)					
4			brown	5.0–6.5	Ring	99.6	8.1	4 6 7
7	SP		POORLY GRADED SAND: light brown, loose, moist (DUNE SAND)					
10				10.0–11.5	Ring	NO RETURN		7 12 11
11			medium dense	10–13	Grab			
13			interlayered with thin lenses of clay					
14			CLAYSTONE: gray/orange brown mottled, soft, moist, trace shells, no discernable bedding, very weathered	15.0–16.5	Ring	94.3	30.6	4 8 13
20			SILTSTONE: dark blue/gray olive mottled, soft, moist, trace medium shells, massive, no discernable bedding	20.0–21.5	Ring	101.2	24.4	8 17 25
25				25.0–26.5	SPT			5 9 13

LEGEND: ■ Ring Sample ○ Grab Sample ▭ Shelby Tube Sample ● SPT

NOTE: This log of subsurface conditions is a simplification of actual conditions encountered. It applies at the location and time of drilling. Subsurface conditions may differ at other locations and times.

Earth Systems Pacific

Boring No. 9

JOB NO.: SL-15835-SA
DATE: 3/17/09

LOGGED BY: R. Wagner
DRILL RIG: Mobile Drill, Model B-53, with Automatic Hammer
AUGER TYPE: 8" Hollow Stem

GOLETA WASTEWATER TREATMENT PLANT UPGRADE
Southeast of Fowler Road & Moffett Place
Goleta Area of Santa Barbara County, California

DEPTH (feet)	USCS CLASS	SYMBOL	SOIL DESCRIPTION	SAMPLE DATA: INTERVAL (feet)	SAMPLE TYPE	DRY DENSITY (pcf)	MOISTURE (%)	BLOWS PER 6 IN.
27			SILTSTONE: as above					
28								
29								
30				30.0–31.5	●			5 8 10
31								
32								
33								
34								
35				35–40	○			
36								
37								
38								
39								
40			interlayered with very thin sand lenses	40.0–41.5	●			5 8 10
41								
42								
43								
44								
45								
46								
47								
48								
49								5 8 12
50				50.0–51.5	●			
51								
52			End of Boring @ 51.5' No subsurface water encountered.					
53								

LEGEND: ■ Ring Sample ○ Grab Sample ▭ Shelby Tube Sample ● SPT

NOTE: This log of subsurface conditions is a simplification of actual conditions encountered. It applies at the location and time of drilling. Subsurface conditions may differ at other locations and times.

Earth Systems Pacific

Boring No. 10
PAGE 1 OF 1

LOGGED BY: R. Wagner
DRILL RIG: Mobile Drill, Model B-53, with Automatic Hammer
AUGER TYPE: 8" Hollow Stem

JOB NO.: SL-15835-SA
DATE: 03/17/09

GOLETA WASTEWATER TREATMENT PLANT UPGRADE
Southeast of Fowler Road & Moffett Place
Goleta Area of Santa Barbara County, California

DEPTH (feet)	USCS CLASS	SYMBOL	SOIL DESCRIPTION	SAMPLE DATA: INTERVAL (feet)	SAMPLE TYPE	DRY DENSITY (pcf)	MOISTURE (%)	BLOWS PER 6 IN.
0			10.5" Asphaltic Concrete					
1–5	SC		CLAYEY SAND: dark gray, loose, moist, trace shell fragments (FILL)	2–4	Grab			
				5.0–6.5	Ring	89.3	17.3	3 4 4
6–8			trace concrete debris					
9–11	CL		SANDY LEAN CLAY: gray/brown mottled, soft, moist, trace shell fragments	10.0–11.5	Ring	90.1	29.9	1 1 3
11–15			CLAYSTONE: gray/brown mottled, soft, moist, very weathered	15.0–16.5	Ring	96.4	26.6	6 12 17
15–26			SILTSTONE: dark blue gray, soft, moist, trace shells, massive	20.0–21.5	SPT			5 10 16
				25.0–26.5	SPT			5 9 15
26			End of Boring @ 26.5' No subsurface water encountered					

LEGEND: Ring Sample ◯ Grab Sample ▭ Shelby Tube Sample ● SPT

NOTE: This log of subsurface conditions is a simplification of actual conditions encountered. It applies at the location and time of drilling. Subsurface conditions may differ at other locations and times.

TRENCH 1 - AREA 1

GOLETA SANITARY DISTRICT
WASTEWATER TREATMENT PLANT UPGRADE
Southeast of Fowler Road and Moffet Place
Goleta Area of Santa Barbara County, California

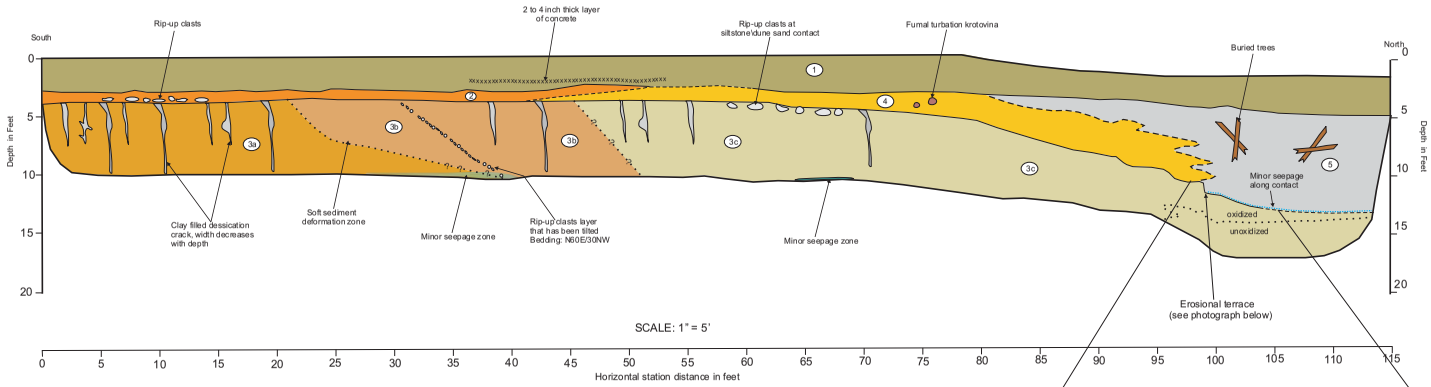

GEOLOGIC UNITS

- **1** — UNIT 1 - Fill: Silty sand to poorly graded sand, brown to dark brown, loose to medium dense, moist, trace of debris, trace of shell debris, some gravel
- **2** — UNIT 2 - Holocene Alluvium: Poorly graded sand, light brown, medium dense, moist, trace of silt
- **3a** — UNIT 3a - lower Pleistocene-upper Pliocene Siltstone: light gray to orange brown, soft, moist to very moist, severely weathered, oxidized, massive to thickly bedded, decomposed shell casts
- **3b** — UNIT 3b - lower Pleistocene-upper Pliocene Silty Sandstone: light gray to orange brown mottled, abundant black mica deposits, soft, moist to very moist, severely weathered, massive to thickly bedded
- **3c** — UNIT 3c - lower Pleistocene-upper Pliocene Silty Claystone: light gray to orange brown mottled, soft, moist to very moist, severely weathered, massive to thickly bedded
- **4** — UNIT 4 - Holocene Dune Sand: poorly graded, light gray to light yellow brown, medium dense, moist
- **5** — UNIT 5 - Holocene Estuary Deposits: poorly graded sand interlayered with sandy clay, dark brown to black, medium dense, very moist to wet, organics and buried trees

GEOLOGIC CONTACTS

- Solid Line: Clear, well defined contact
- Dashed Line: Approximate, slightly diffused contact
- Dotted Line: Gradational or diffused contact, queried where uncertain

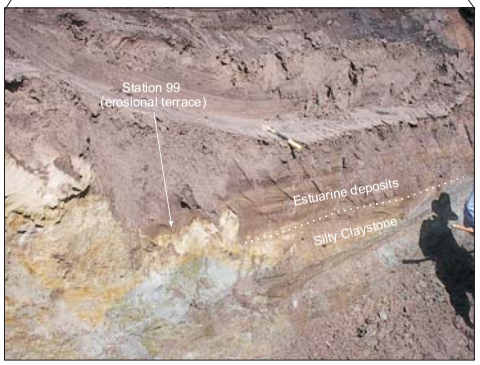

Earth Systems Pacific
4378 Old Santa Fe Road, San Luis Obispo, CA 93401
August 2009
(805) 544-3276 - (805) 544-1786 Fax
www.earthsys.com - e-mail: esc@earthsystems.com
SL-15835-GA

TRENCH 2 - AREA 3

GOLETA SANITARY DISTRICT
WASTEWATER TREATMENT PLANT UPGRADE
Southeast of Fowler Road and Moffett Place
Goleta Area of Santa Barbara County, California

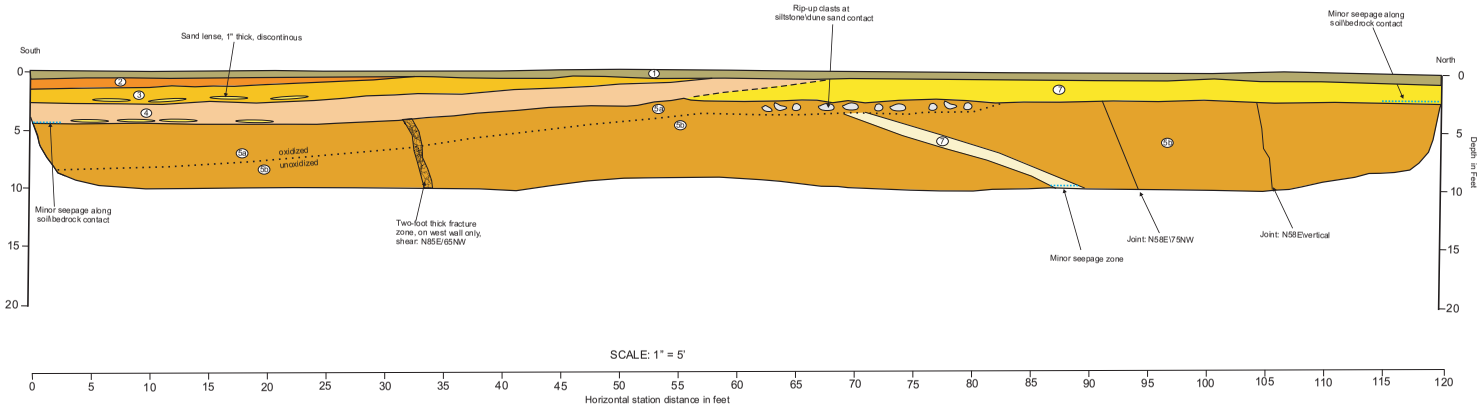

GEOLOGIC UNITS

- (1) UNIT 1 - Fill: Clayey with gravel, brown to dark brown, medium dense, moist
- (2) UNIT 2 - Holocene Alluvium: Clayey sand, light brown, medium stiff, moist
- (3) UNIT 3 - Holocene Dune Sand: poorly graded sand, tan to light yellow brown, dense, moist, fine grained
- (4) UNIT 4 - Holocene Alluvium: Silty sand, medium brown, medium dense, moist, fine grained, trace of clay
- (5a) UNIT 5a - lower Pleistocene-upper Pliocene Siltstone: light gray to orange brown mottled, soft, moist to very moist, severely weathered, oxidized, massive to thickly bedded, trace of shell fragments
- (5b) UNIT 5b - lower Pleistocene-upper Pliocene Siltstone: dark bluish gray, soft, moist to very moist, unoxidized, massive to thickly bedded, trace of shell fragments, poorly developed joint system
- (6) UNIT 6- Early Holocene Dune Sand: poorly graded sand, light gray to orange brown mottled, medium dense, moist, fine grained, trace clay, fine grained
- (7) UNIT 7 - lower Pleistocene-upper Pliocene Sandtone: yellow brown, transitions to dark gray with depth, soft, moist to very moist, 9 inches thick, fine grained

GEOLOGIC CONTACTS

- Solid Line: Clear, well defined contact
- Dashed Line: Approximate, slightly diffused contact
- Dotted Line: Gradational or diffused contact, queried where uncertain

UNIT 7: Sandstone bed on west trench sidewall

Earth Systems Pacific
4378 Old Santa Fe Road, San Luis Obispo, CA 93401
August 2009
(805) 544-3276 - (805) 544-1786 Fax
www.earthsys.com - e-mail: esc@earthsystems.com
SL-15835-GA

Earth Systems Pacific

2049 Preisker Lane, Suite E
Santa Maria, CA 93454

(805) 928-2991
FAX (805) 928-9253

July 30, 2009

FILE NO.: SL-15835-GA

Mr. James R. Steele
Tetra Tech, Inc.
301 Mentor Drive, Suite A
Santa Barbara, CA. 93111-3339

PROJECT: GOLETA WASTEWATER TREATMENT PLANT UPGRADE
SOUTHWEST OF FOWLER ROAD AND MOFFETT PLACE
GOLETA, CALIFORNIA

SUBJECT: Report of Compaction Test Results

Dear Mr. Steele,

This report presents the results of the compaction tests performed at the project on the dates indicated. The results include the comparison of the dry density determined in the field by the nuclear gauge method (ASTM D6938-07b) to the maximum dry density determined in the laboratory from a Maximum Dry Density Versus Optimum Moisture Content Test (ASTM D1557-07, Method A).

The maximum dry density and optimum moisture content utilized was:

Soil Description	USCS	Maximum Dry Density	Optimum Moisture
Poorly Graded SAND	(SP)	110.8 pcf	15.3 %

The test results are on the compaction test results sheet and the approximate test locations are shown on the attached compaction test location map.

SCOPE OF SERVICES

The scope of service authorized for this firm was limited to performing compaction tests as described above. Observation of earthwork procedures such as stripping of deleterious materials, benching, keying, moisture conditioning, compaction, etc. was not authorized and was not performed.

Assessment of the conformance of the work to plans, specifications, codes, standards, soils reports, or any other recommendation or requirement was also beyond our authorized scope.

As surveying was beyond this firm's scope, elevations, locations, setbacks, slopes, dimensions, etc. were not verified. Locations of the tests were estimated using reference points available on the site.

Elevations were estimated by sighting or use of a hand level and elevation references available on the site. No opinion was made or is offered as to the suitability of the work to fulfill its intended use.

The tests were performed in conformance with the standards noted as modified by generally accepted practice in this area at this time. No warranty is either expressed or implied.

We appreciate the opportunity to have provided services for this project and look forward to working with you in the future. If there are any questions concerning this report, please do not hesitate to contact the undersigned.

Sincerely,

Earth Systems Pacific

Doug Dunham

Doug Dunham, G.E.

REGISTERED PROFESSIONAL ENGINEER
DOUGLAS A. DUNHAM
No. 2586
Exp. 12-31-09
GEOTECHNICAL
STATE OF CALIFORNIA

Attachments: Compaction Test Results
Compaction Test Location Map

Doc. No.: 0907-048.CMP/smk

Compaction Test Results
Goleta Wastewater Treatment Plant Upgrade
Goleta, California

COMPACTION TEST RESULTS

Test No.	Date	Test Locations	Test Depth (Elev.)	Moisture Percent (%)	Dry Density (pcf)	Relative Compaction (%)	Maximum Dry Density
1	7/20/09	See Test Location Map	7.0'	20.1	100.2	90	110.8
2	7/20/09	See Test Location Map	7.0'	21.2	100.0	90	110.8
3	7/20/09	See Test Location Map	7.0'	19.9	99.3	90	110.8
4	7/20/09	See Test Location Map	6.0'	18.7	101.1	91	110.8
5	7/20/09	See Test Location Map	6.0'	17.9	102.7	93	110.8
6	7/20/09	See Test Location Map	6.0'	19.2	100.0	90	110.8
7	7/21/09	See Test Location Map	5.0'	17.7	101.9	92	110.8
8	7/21/09	See Test Location Map	5.0'	18.0	102.3	92	110.8
9	7/21/09	See Test Location Map	5.0'	19.3	100.3	91	110.8
10	7/21/09	See Test Location Map	4.0'	17.6	103.1	93	110.8
11	7/21/09	See Test Location Map	4.0'	17.8	102.7	93	110.8
12	7/21/09	See Test Location Map	4.0'	18.3	101.9	92	110.8
13	7/21/09	See Test Location Map	3.0'	17.1	103.8	94	110.8
14	7/21/09	See Test Location Map	3.0'	16.6	104.1	94	110.8
15	7/21/09	See Test Location Map	3.0'	21.2	100.1	90	110.8
16	7/21/09	See Test Location Map	2.0'	18.4	102.6	93	110.8
17	7/21/09	See Test Location Map	2.0'	17.0	104.2	94	110.8
18	7/21/09	See Test Location Map	2.0'	17.7	103.1	93	110.8
19	7/22/09	See Test Location Map	1.0'	16.8	103.8	94	110.8
20	7/22/09	See Test Location Map	1.0'	17.5	103.3	93	110.8
21	7/22/09	See Test Location Map	1.0'	17.1	104.0	94	110.8
22	7/22/09	See Test Location Map	OG	17.0	104.4	94	110.8
23	7/22/09	See Test Location Map	OG	17.6	102.8	93	110.8
24	7/22/09	See Test Location Map	OG	16.3	105.6	95	110.8

OG=ORIGINAL GRADE

COMPACTION TEST LOCATION MAP

GOLETA WASTEWATER TREATMENT PLANT UPGRADE

Southeast of Fowler Road and Moffett Place
Goleta, California

AREA 3

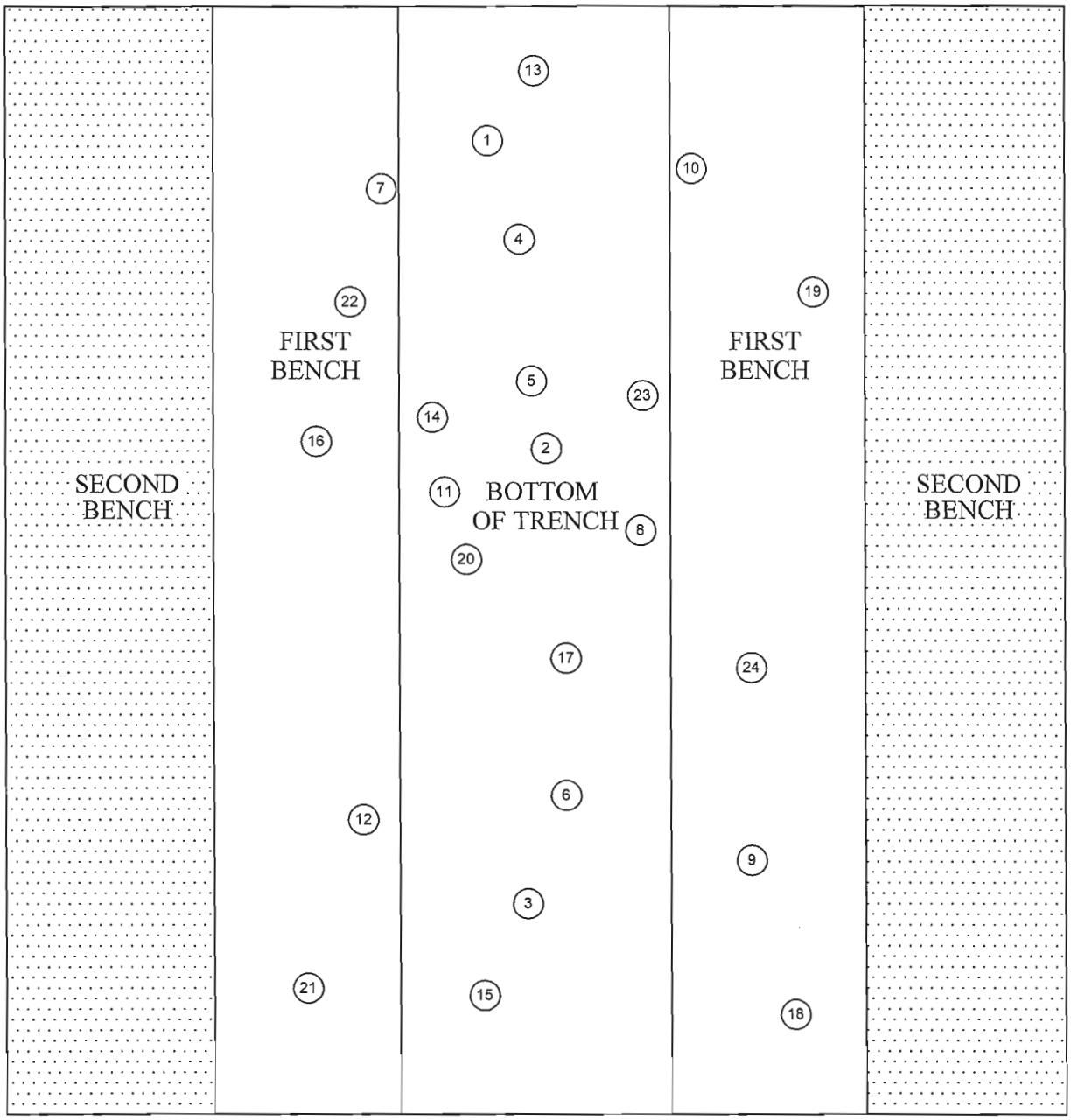

LEGEND

(24) Field Density Test Location (Approx.)

N

NOT TO SCALE

Earth Systems Pacific

2049 North Preisker Lane, Suite E
Santa Maria, CA 93454

(805) 928-2991 • FAX (805) 928-9253
E-mail: esc@earthsys.com
SL-15835-GA

July 30, 2009 SMK

GOLETA WASTEWATER TREATEMENT PLANT UPGRADE-CTLM 073009.dwg

Goleta Sanitary District Health Risk Assessment for the Wastewater Treatment Plant Upgrade Project

September 2009

Submitted to:

Goleta Sanitary District
One William Moffett Place
Goleta, CA 93117

Prepared by:

Tetra Tech, Inc.
301 Mentor Drive, Suite A
Santa Barbara, California 93111

1.0 INTRODUCTION

1.1 SUMMARY

In June 2009, the Goleta Sanitary District (GSD) conducted an air toxics Health Risk Assessment (HRA) as a part of the California Environmental Quality Act (CEQA) in response to the proposed project upgrades at GSD's Waste Water Treatment Plant (WWTP). This HRA was conducted to evaluate the project with respect to human health risk associated with the implementation for the Proposed Project upgrades and operation of the facility. This HRA provides estimates of risk for the following scenarios:

- Baseline - Operation of the facility as it is currently configured;
- Future - Operation of the facility with proposed upgrades; and
- Future Design - Operation of the facility with proposed upgrades at maximum design influent capacity.

This HRA was conducted in accordance with the SBAPCD Health Risk Assessment guidelines (SBCAPCD 2008) and the OEHHA guidelines (OEHHA 2005). The air toxics HRA was performed using the Hotspots Analysis and Reporting Program (HARP) software, Version 1.4a (Build 23.07.00). The cancer risk for the point of maximum impact (PMI), the maximum exposed individual within a residential (MEIR) and worker (MEIW) area are provided. The chronic and acute non-cancer Hazard Index (HI) risk values were calculated and compared to significance thresholds for cancer and chronic and acute non-cancer risk adopted by the Santa Barbara Air Pollution Control District's (SBCAPCD) Board of Directors. The calculated risk values and applicable thresholds are provided in Table 1-1.

Results show that the cancer risk for all scenarios is below threshold.

Table 1-1
Summary of Risk

Risk	Baseline	Future	Future Design	Maximum Risk	Threshold
PMI	7.02E-06	7.27E-06	7.78E-06	7.78E-06	1.0 E-05
MEIR	7.02E-06	7.27E-06	7.78E-06	7.78E-06	1.0 E-05
MEIW	4.40E-06	3.74E-06	6.40E-06	6.40E-06	1.0 E-05
Chronic non-cancer risk	0.0391	0.162	0. 275	0.275	1
Acute non-cancer risk	0.684	0.739	0.983	0.983 [1]	1

Note: [1] Refined calculation to determine Acute non-cancer risk per OEHHA guidelines. Detailed analysis provided in Section 5.0 of this report.

Details on these findings are provided in this report. The HARP input and output files are included in Appendix B (electronic).

1.2 FACILITY NAME & DESCRIPTION

The GSD WWTP is located at One William Moffett Place, in an unincorporated coastal area of Santa Barbara County, California. The plant is located approximately 10 miles west of the City of Santa Barbara, near the Pacific Coast, as shown in Figure 1-1. Treated wastewater is discharged by a south-trending ocean outfall to the Pacific Ocean at a location more than one mile offshore of Goleta Beach County Park.

This HRA was prepared to assess the exposure and risk to the neighboring community from the Proposed Project upgrade of treatment facilities at GSD. General areas where project components will be located

are shown as Areas 1, 2, and 3 in the Facility Plot Plan (Figure 1-2). The exact location of each component will be determined during the final design process.

1.3 FACILITY OPERATIONS

The process components are described in Section 2.0 and are based on information provided within the *Facilities Planning Study* (HDR 2008) and the *Trickling Filter Evaluation Technical Memorandum* (HDR 2008).

1.3.1 Facility Name

Goleta Sanitary District
One William Moffett Place
Goleta, California 93117

1.3.2 Facility Identifier Number

1528

1.3.3 Location (UTM)

The boundary locations for the facility are provided in Table 1-2.

Table 1-2
Boundary Identification Summary

UTME	UTMN
239856.8	3812558.4
239843.0	3812640.2
239838.7	3812690.3
239836.6	3813068.2
239596.0	3812965.8
239449.4	3812965.3
239451.0	3812543.1

1.3.4 Land Use Type

Rural

1.3.5 Location Topography

Flat

1.3.6 Facility Plot Plan

A facility plot plan is provided in Figure 1-2.

1.4 OVERALL METHODOLOGY

The HRA described in this report was conducted as part of the CEQA process and is based on prior AB2588 reporting (Brown and Coldwell Consultants 1992), SBCAPCD permitted potential to emit (PTO

8561-R5), and source test data (Brown and Coldwell Consultants 1994). This data used to support the findings in this report are provided in Appendix A and summarized in Section 3.0 of this report (Emission Inventory) and Appendix B, Modeling Result Files (electronic submittal).

As used in this report, the term "health risk" addresses the likelihood that exposure to a given toxic air contaminant under a given set of conditions will result in an adverse health effect. Health risk is affected by several factors, such as: the amount, toxicity, and concentration of the contaminant; the meteorological conditions; the distance from emission sources to people; the distance between emission sources; the age, health, and lifestyle of the people living or working at a location; and the duration of exposure to the toxic air contaminant.

Health effects are divided into cancer and non-cancer risks. "Cancer risk" refers to the increased chance of contracting cancer as a result of an exposure, and is expressed as a probability: chances-in-a-million. The values expressed for cancer risk do not predict actual cases of cancer that will result from exposure to toxic air contaminants. Rather, they state a possible risk of contracting cancer over and above the background level.

For non-cancer health effects, risk is characterized by a "Hazard Index" (HI), which is obtained by dividing the predicted concentration of a toxic air contaminant by a Reference Exposure Level (REL) for that pollutant that has been determined by health professionals, the Office of Environmental Health Hazard Assessment (OEHHA) and the California Air Resources Board (ARB). The RELs are used as indicators of a chemical's potential adverse effects. A REL is the concentration at or below which no adverse health effects are anticipated for specific exposure duration. Thus, the HI is a measure of the exposure relative to a level of safety and is appropriately protective of public health.

This HRA was conducted in accordance with the SBAPCD Health Risk Assessment guidelines (SBCAPCD 2008) and the OEHHA guidelines (OEHHA 2005). This HRA was implemented using the ARB's HARP software version 1.4a (Build 23.07.00).

1.4.1 Health Risk Assessment

There are four steps that comprise a HRA: 1) Hazard Identification; 2) Exposure Assessment; 3) Dose--Response Assessment; and 4) Risk Characterization. Each of these steps is described below.

Hazard Identification

For air toxics sources, hazard identification involves identifying if a hazard exists, and if so, which are the pollutants of concern. For the purposes of this HRA the pollutants of concern are identified by the OEHHA guidelines (OEHHA 2005) as prescribed by the SBAPCD.

Exposure Assessment

Exposure assessment is the estimation of the extent of public exposure to each substance for which potential risk will be evaluated. This involves emission quantification, modeling of environmental transport, evaluation of environmental fate, identification of exposure routes, identification of exposed populations, and estimation of short-term and long-term exposure levels. For this HRA, The Hot Spots Analysis and Reporting Program (HARP) software was used to model ground level concentrations at specific off-site locations resulting from facility emissions. The ISCST3 (Industrial Source Complex Dispersion Model) air modeling software, which is incorporated into HARP, was used. A small subset of the released substances, are emitted partially or totally as particles and are subject to deposition.

Ingestion and dermal pathways, as well as the inhalation pathway, are evaluated for these released substances. These pathways include direct deposition to human skin and subsequent absorption and deposition onto soil plants, water and animals that are subsequently ingested.

Dose-Response Assessment

Dose-response assessment is characterizing the relationship between exposure to a pollutant and incidence of an adverse health effect in exposed populations. For the purposes of this HRA all dose-response assessment is provided by the OEHHA guidelines. For carcinogenic risk, the dose-response relationship is expressed in terms of a potency slope that is used to calculate the probability or risk of cancer associated with an estimated exposure. Cancer potency factors are expressed as the 95th percent upper confidence limit of the slope of the dose response curve estimated assuming continuous lifetime exposure to a substance at a dose of one milligram per kilogram of body weight per day. For non-carcinogenic health effects, the dose-response relationship is expressed as acute and chronic non-cancer RELs. The acute and chronic RELs are defined as the concentration at which no adverse non-cancer adverse health effects are anticipated. The most sensitive health effect is chosen to determine the REL if the chemical affects multiple organ systems. Unlike cancer health effects, non-cancer acute and chronic health effects are generally assumed to have thresholds for adverse effects. In other words, acute or chronic injury from a pollutant will not occur until exposure to that pollutant has reached or exceeded a certain concentration (i.e., threshold). The acute and chronic RELs are intended to be below the threshold for health effects for the general population.

Risk Characterization

The final step of risk assessment all of the information generated in the previous three steps are combined to assess the overall risk. For this HRA, the exposure quantified in the exposure assessment was combined with the health values from the OEHHA guidelines to produce an estimated individual lifetime cancer risk for carcinogens and a HI for non-carcinogens. The receptor with the highest estimated risk value for a given health outcome is called the maximum exposed individual (MEI). The MEI was identified for three receptor groups. For residential receptors this is called the MEI residential (MEIR). For commercial receptors it is called the MEI worker (MEIW). These values are compared to threshold values in order to determine significance.

1.4.2 Limitations

The process of health risk assessment requires significant amounts of data, introducing uncertainty with respect to data accuracy. There are significant inherent uncertainties in the dispersion model's ability to predict ground level concentrations for a 70 year lifetime based on one year of meteorological data. There are additional uncertainties in the exposure assumptions and in the accuracy to which these assumptions reflect real-world conditions for the potentially exposed population. Finally, there are significant uncertainties in the dose-response data, provided by the guidelines in the form of potency slope factors and relative exposure limits, and the ability to accurately quantify the probability of an adverse health impact as a function of dose.

However, because the guidelines used to prepare this HRA specify the analysis methodology for all these issues, all HRAs prepared with the guidelines will be subject to the same uncertainties.

In addition to the inherent uncertainties described above, there are additional uncertainties in the characterization of the facility, most notably the air toxic emissions rates. Emission from the facility were estimated by one of three basic methods; 1) process emissions estimated from source test data; 2) process

emissions estimated from emissions factors developed from other facilities; and 3) combustion emissions estimated from combustion emission factors.

Emissions estimated from source test data are subject to uncertainties for two reasons. First, the source test data includes a limited number of sampling points in space and time. The results may not accurately reflect the entire spatial extent of the source. Second, the results may not reflect the long-term emissions from the facility accurately because facility operations are not constant over time.

Process emissions estimated by emission factors are subject to uncertainties in that the emission factors developed from data from other facilities may not accurately reflect emissions from this facility.

Combustion emission factors were used to estimate emissions from all combustion sources, including diesel internal combustion engines and the boilers, flare and microturbine burning digester gas. The digester gas combustion emissions were estimated using natural gas emission factors which may not accurately represent the emissions from combustion of digester gas.

Although the amount of digester gas assumed to be burned in the boilers, flare, and microturbine is based on a combination of current boiler permit limits, actual annual emission data, and equipment size rating, we believe the total amount of digester gas consumed may not accurately reflect process flow and the amount of digester gas produced by the facility.

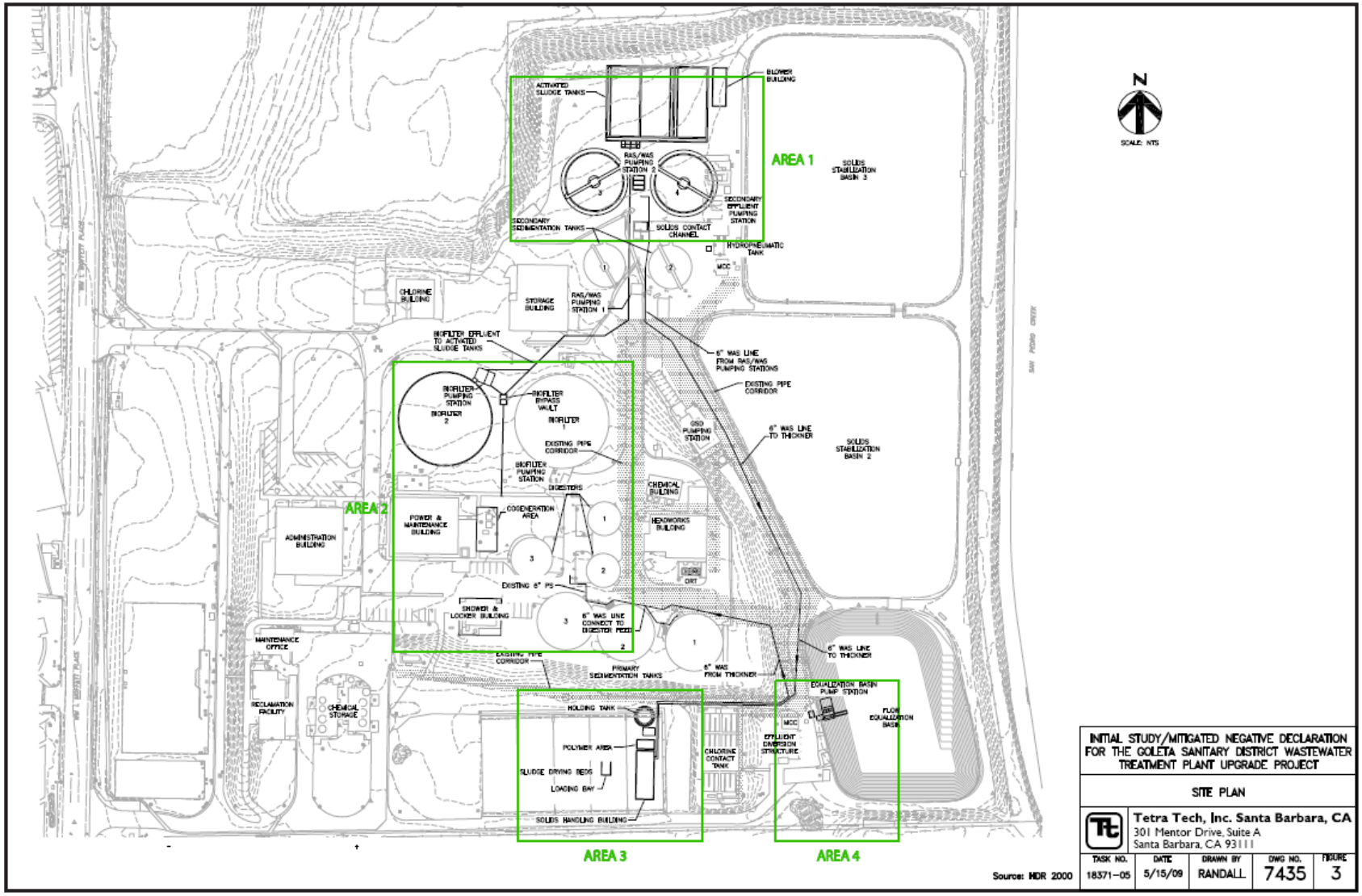

Figure 1-2 Facility Plot Plan

3.0 EMISSION INVENTORY

3.1 EMISSIONS ESTIMATION METHODOLOGY

The emission rates per source were calculated are:

- Baseline - Operation of the facility as it is currently configured;
- Future - Operation of the facility with proposed upgrades; and
- Future Design - Operation of the facility with proposed upgrades at maximum design influent capacity.

Table 3-1 identifies each source and its' inclusion in the emission inventory for each operating condition and scenario. Figure 3-1 shows the locations of emission sources by stack identification (ID) number for the baseline scenario. Figure 3-2 shows the locations of emission sources by stack ID for the future and future design scenarios. The emission rates per source are summarized in Table 3-2 through 3-16 and include an emission rate for each operating condition.

Table 3-1
Summary of Sources

			Source Included in Emission Inventory (yes/no)		
Device Identification	**Stack ID**	**Source Name**	**Baseline (2008)**	**Future (2014)**	**Future Design (2014)**
1	1	Headwork's	yes	yes	yes
2	2	Mechanical Thickener #1 (no emissions)	no	no	no
3	2	Mechanical Thickener #2 (no emissions)	no	no	no
4	3	Primary Sedimentation	yes	yes	yes
5	4	Primary Sedimentation	yes	yes	yes
6	5	Primary Sedimentation	yes	yes	yes
7	6	Biofilter #1	yes	yes	yes
8	7	Biofilter #2 (addition)	no	yes	yes
9	8	Solids Contact Chamber (remove)	yes	no	no
10	9	Secondary Sedimentation	yes	yes	yes
11	10	Secondary Sedimentation	yes	yes	yes
12	11	Secondary Sedimentation (addition)	no	yes	yes
13	12	Secondary Sedimentation (addition)	no	yes	yes
14	13	Aeration Basin (addition)	no	yes	yes
15	14	Boilers (2-one stack)	yes	yes	yes
16	15	Flare	yes	yes	yes
17	16	Sludge Stabilization Basin #1	yes	yes	yes
18	17	Sludge Stabilization Basin #2	yes	yes	yes
19	18	Sludge Stabilization Basin #3 (change. to equalization pond)	yes	no	no
20	19	Equalization Pond	no	yes	yes
21	20	Sludge Drying Bed	yes	yes	yes
22	21	Sludge Dredge	yes	no	no
23	22	Generator (390 hp) (remove)	yes	no	no
24	23	Generator (600 hp) (remove)	yes	no	no
25	24	Generator (1000 hp) (2 additional)	no	yes	yes
26	25	Chlorine Contact Tank	yes	yes	yes
27	26	Microturbine (addition)	no	yes	yes

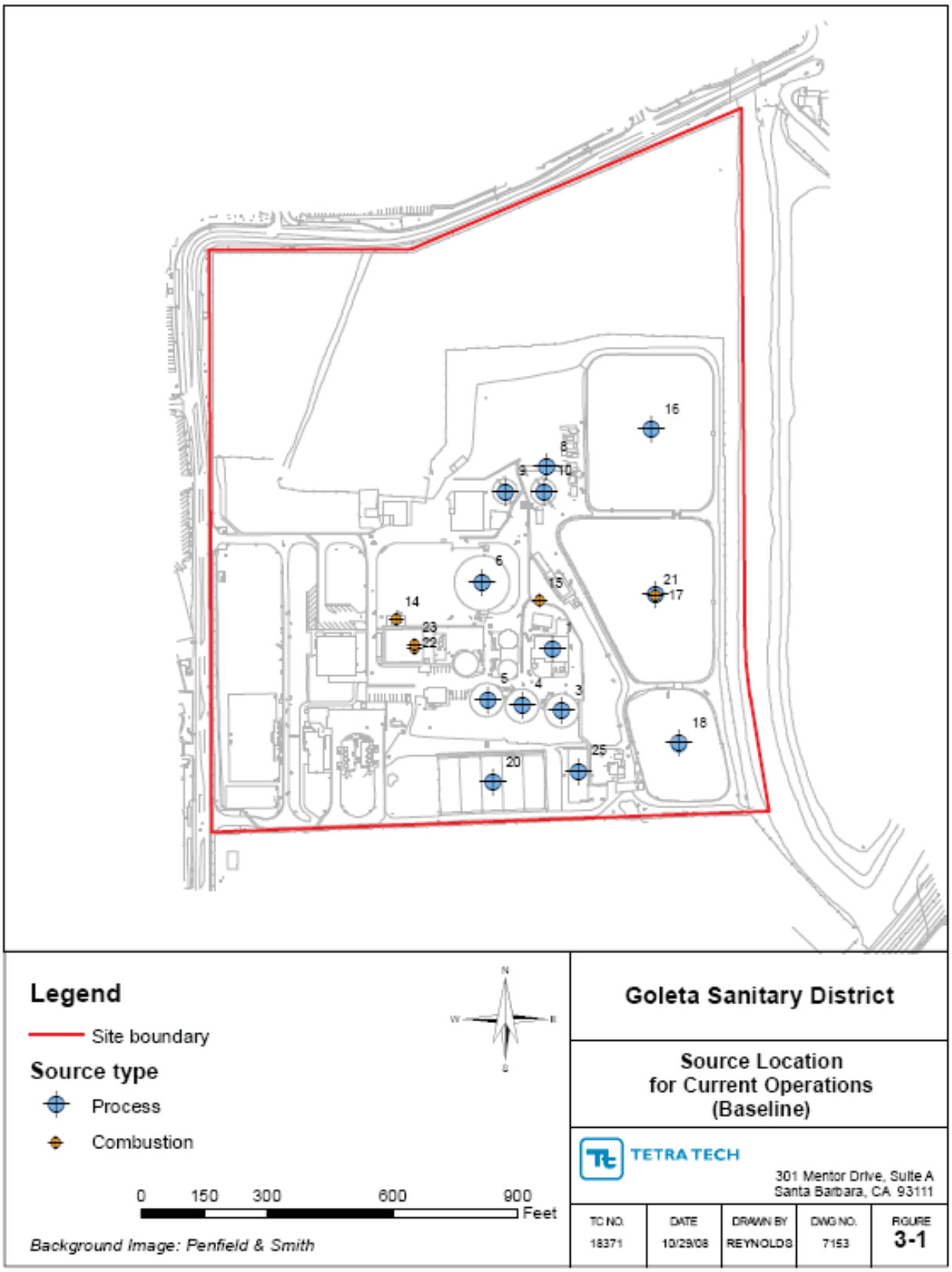

Figure 3-1 Source Location by Stack ID for Current Operations

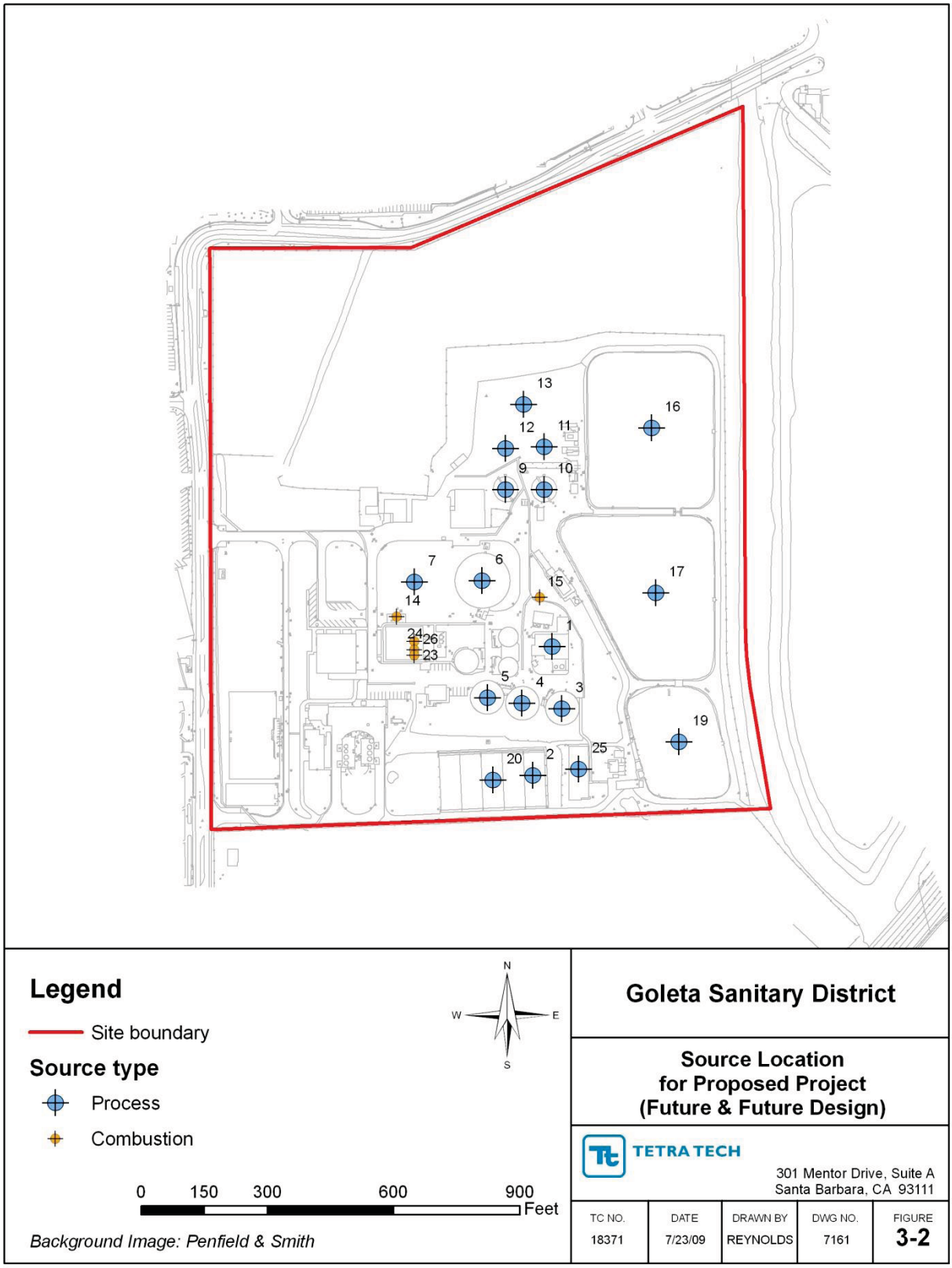

Figure 3-2 Source Location by Stack ID for Proposed Project

3.2 SUMMARY OF EMISSIONS BY SOURCE

A source description and resulting emissions per source are provided in Table 3-2 through Table 3-16.

The baseline emissions were calculated from the ATEIR (ACE) output files and were multiplied by the appropriate ration to compensate for the increased flow rates at the baseline, future, and future design operating scenarios.

The emission inventory is based previous AB2588 emission inventory data for the facility. It was assumed that an influent rate of approximately 4.7 MGD characterized the current conditions at the facility as well as at the time of the AB2588 emission inventory. Historical data shows that the influent rate at the time of the AB2588 emission inventory was 4.3 MGD and current conditions are approximately 5.1 MGD, therefore emission are revised by a factor of 5.1 MGD/ 4.3 MGD = 1.186 for the current and future base cases. Also, future design capacity is corrected to 9.0 MGD, therefore emissions should have been factored by 9.0 MGD/ 4.3 MGD = 2.093.

The following paragraphs provide a brief explanation to applying emission factors for processes that were not originally included in the initial AB2588 or in the case of percholoroethylene, eliminated from the inventory.

The emission factors used for the equalization pond are based on the source test files for the primary sedimentation pond. This assumption was made because the process water emissions at the equalization pond are anticipated equal to the primary sedimentation pond since the process end points are similar in nature. Similar, the sludge drying bed emissions were set equal to the emissions from the primary sedimentation process and the emissions from the aeration basin are set equal to the solids contact chamber.

Hydrogen sulfide emissions were not included as a part of this HRA nor were they included in past HRA's. Ferrous chloride is added at the headwork's to control H2S emissions.

It is important to note that the Goleta Sanitary District Board of Directors in May of 1996 approved Ordinance #51 regulating the discharge of perchloroethylene by the users of the sewerage system. This ordinance was approved in order to reduce the potential for environmental contamination caused by the escape of perchloroethylene (PCE) from sewer lines. PCE is subjected to a "zero discharge" limitation under the District's local limits for industrial wastewater dischargers. Furthermore, the District has the authority to impose, assess and recover penalties from those industries that are found to be in violation of this ordinance.

Secondary Sedimentation

Table 3-6
Secondary Sedimentation- Air Toxic Emission Rates

CAS	Pollutant	2008-Baseline (lbs/hour)	2008-Baseline (lbs/year)	2014 Future[1] (lbs/hour)	2014 Future[1] (lbs/year)	2014 Future Plus[2] (lbs/hour)	2014 Future Plus[2] (lbs/year)
76131	Chlorinated fluorocarbon {CFC-113} {1,1,2-Trichloro-1,2,2-trifluoroethane}	0.002846	8.90686	0.001423	4.45343	0.002513	7.86297
67663	Chloroform	3.97E-06	0.02372	1.99E-06	0.017402	3.51E-06	0.030725
106467	Dichlorobenzene-P	2.03E-05	0.16604	1.01E-05	0.088829	1.79E-05	0.156836
50000	Formaldehyde	2.41E-05	0.20162	1.2E-05	0.10674	2.13E-05	0.186186
71556	Methyl chloroform {1,1,1-Trichloroethane}	0.000652	1.186	0.000326	0.593	0.000576	1.047
75092	Methylene Chloride	6.59E-06	0.04744	3.3E-06	0.028882	5.82E-06	0.050995
127184	Perchloroethylene	5.51E-06	0.04744	2.76E-06	0.024155	4.87E-06	0.042648
108883	Toluene	0.000569	3.9138	0.000285	1.9569	0.000503	3.4551
79016	Trichloroethylene	1.19E-05	0.08302	5.93E-06	0.04151	1.05E-05	0.07329
1330207	Xylenes	0.005693	9.80822	0.002846	4.90411	0.005026	8.65869
100425	Styrene	0.009844	17.23258	0.004922	8.61629	0.00869	15.21291

Note: air toxics emissions based on Source Test Report 1015, Brown & Caldwell 1994 & ACE files, SBCAPCD files 1993
1 Future emission rates based on four tanks at the same process rate as the baseline
2 Future design emission rates based on four tanks with an increased process rate (double baseline).

Aeration Basin

Table 3-7
Aeration Basin- Air Toxic Emission Rates

CAS	Pollutant	2008-Baseline (lbs/hour)	2008-Baseline (lbs/year)	2014 Future (lbs/hour)	2014 Future (lbs/year)	2014 Future Plus (lbs/hour)	2014 Future Plus (lbs/year)
76131	Chlorinated fluorocarbon {CFC-113} {1,1,2-Trichloro-1,2,2-trifluoroethane}	*	*	0.011504	35.4614	0.020312	62.6106
67663	Chloroform	*	*	3.07E-05	0.26092	5.42E-05	0.475095
106467	Dichlorobenzene-P	*	*	2.17E-05	0.18976	3.83E-05	0.335685
50000	Formaldehyde	*	*	1.79E-05	0.15418	3.16E-05	0.276986
71556	Methyl chloroform {1,1,1-Trichloroethane}	*	*	0.002609	4.6254	0.004607	8.1666
75092	Methylene Chloride	*	*	3.27E-05	0.28464	5.78E-05	0.506279
127184	Perchloroethylene	*	*	1.76E-05	0.14232	3.1E-05	0.271483
108883	Toluene	*	*	0.002253	14.83686	0.003979	26.19594
79016	Trichloroethylene	*	*	0.001222	10.63723	0.002157	18.78109
1330207	Xylenes	*	*	0.022534	39.41078	0.039786	69.58362
100425	Styrene	*	*	0.039138	68.76428	0.069102	121.4101

Note: air toxics emissions based on Source Test Report 1015, Brown & Caldwell 1994 & ACE files, SBCAPCD files 1993
* denotes not applicable or value is zero

Flare

Table 3-9
Flare- Air Toxic Emission Rates

		2008-Baseline		2014 Future		2014 Future Plus	
CAS	**Pollutant**	**(lbs/hour)**	**(lbs/year)**	**(lbs/hour)**	**(lbs/year)**	**(lbs/hour)**	**(lbs/year)**
50000	Formaldehyde	0.004107	36.0213	0.009741	85.323	0.009741	85.33495
108883	Toluene	0.000204	1.78593	0.000483	4.2303	0.000483	4.2303
1330207	Xylenes	0.000102	0.88792	0.000242	2.1032	0.000242	2.11515
1151	PAHs (total)	4.94E-05	0.42378	0.000117	1.0038	0.000117	1.01575
71432	Benzene	0.000559	4.89365	0.001325	11.5915	0.001325	11.60345
75070	Acetaldehyde	0.000151	1.32179	0.000358	3.1309	0.000358	3.1309
100414	Ethyl Benzene	0.005066	44.37582	0.012	105.1122	0.012	105.1122
107028	Acrolein	3.53E-05	0.3027	8.33E-05	0.717	8.33E-05	0.72895
110543	Hexane	0.000102	0.88792	0.000242	2.1032	0.000242	2.11515
115071	Propylene	0.008584	75.19068	0.020333	178.1028	0.020333	178.1148

Note: air toxics emissions based on VCAPCD emission factor for natural gas combustion

Diesel Combustion

Table 3-13
Dredge - Air Toxic Emission Rates

		2008-Baseline		2014 Future		2014 Future Plus	
CAS	**Pollutant**	**(lbs/hour)**	**(lbs/year)**	**(lbs/hour)**	**(lbs/year)**	**(lbs/hour)**	**(lbs/year)**
50000	Formaldehyde	0.018663	*	*	*	*	*
108883	Toluene	0.00114	*	*	*	*	*
1330207	Xylenes	0.000458	*	*	*	*	*
9901	Diesel Exhaust PM	0.44	112.3348	*	*	*	*
1151	PAHs (total)	0.000604	*	*	*	*	*
71432	Benzene	0.002014	*	*	*	*	*
75070	Acetaldehyde	0.008469	*	*	*	*	*
91203	Naphthalene	0.000213	*	*	*	*	*
100414	Ethyl Benzene	0.000118	*	*	*	*	*
106990	1,3-Butadiene	0.002351	*	*	*	*	*
107028	Acrolein	0.000367	*	*	*	*	*
108907	Chlorobenzn	2.16E-06	*	*	*	*	*
110543	Hexane	0.000291	*	*	*	*	*
115071	Propylene	0.005049	*	*	*	*	*
7439921	Lead	8.97E-05	*	*	*	*	*
7439965	Manganese	3.35E-05	*	*	*	*	*
7439976	Mercury	2.16E-05	*	*	*	*	*
7440020	Nickel	4.22E-05	*	*	*	*	*
7440382	Arsenic	1.73E-05	*	*	*	*	*
7440439	Cadmium	1.62E-05	*	*	*	*	*
7440473	Chromium	6.49E-06	*	*	*	*	*
7440508	Copper	4.43E-05	*	*	*	*	*
7440666	Zinc	0.000242	*	*	*	*	*
7647010	Hydrochloric acid	0.002014	*	*	*	*	*
7782492	Selenium	2.38E-05	*	*	*	*	*
18540299	Chromium, hexavalent (and compounds)	1.08E-06	*	*	*	*	*

Note: Air toxics based on SBCAPCD DICE emission factors. Speciated emission factors from VCAPCD combustion emission factors (Houly emissions used for acute analysis only, Annual emissions not used in health risk assessment
* denotes not applicable or value is zero

Table 3-14
Generator 390 hp - Air Toxic Emission Rates

		2008-Baseline		2014 Future		2014 Future Plus	
CAS	**Pollutant**	**(lbs/hour)**	**(lbs/year)**	**(lbs/hour)**	**(lbs/year)**	**(lbs/hour)**	**(lbs/year)**
50000	Formaldehyde	0.035678	*	*	*	*	*
108883	Toluene	0.002179	*	*	*	*	*
1330207	Xylenes	0.000876	*	*	*	*	*
9901	Diesel Exhaust PM	0.85	17.18	*	*	*	*
1151	PAHs (total)	0.001155	*	*	*	*	*
71432	Benzene	0.003851	*	*	*	*	*
75070	Acetaldehyde	0.016191	*	*	*	*	*
91203	Naphthalene	0.000407	*	*	*	*	*
100414	Ethyl Benzene	0.000225	*	*	*	*	*
106990	1,3-Butadiene	0.004494	*	*	*	*	*
107028	Acrolein	0.000701	*	*	*	*	*
108907	Chlorobenzn	4.13E-06	*	*	*	*	*
110543	Hexane	0.000556	*	*	*	*	*
115071	Propylene	0.009653	*	*	*	*	*
7439921	Lead	0.000172	*	*	*	*	*
7439965	Manganese	6.41E-05	*	*	*	*	*
7439976	Mercury	4.13E-05	*	*	*	*	*
7440020	Nickel	8.06E-05	*	*	*	*	*
7440382	Arsenic	3.31E-05	*	*	*	*	*
7440439	Cadmium	3.1E-05	*	*	*	*	*
7440473	Chromium	1.24E-05	*	*	*	*	*
7440508	Copper	8.47E-05	*	*	*	*	*
7440666	Zinc	0.000463	*	*	*	*	*
7647010	Hydrochloric acid	0.003851	*	*	*	*	*
7782492	Selenium	4.55E-05	*	*	*	*	*
18540299	Chromium, hexavalent (and compounds)	2.07E-06	*	*	*	*	*

Note: Air toxics based on SBCAPCD DICE emission factors. Speciated emission factors from VCAPCD combustion emission factors (Houly emissions used for acute analysis only, Annual emissions not used in health risk assessment
* denotes not applicable or value is zero

Table 3-15
Generator 600 hp- Air Toxic Emission Rates

CAS	Pollutant	2008-Baseline (lbs/hour)	2008-Baseline (lbs/year)	2014 Future (lbs/hour)	2014 Future (lbs/year)	2014 Future Plus (lbs/hour)	2014 Future Plus (lbs/year)
50000	Formaldehyde	0.05489	*	*	*	*	*
108883	Toluene	0.003352	*	*	*	*	*
1330207	Xylenes	0.001348	*	*	*	*	*
9901	Diesel Exhaust PM	1.32	26.43	*	*	*	*
1151	PAHs (total)	0.001778	*	*	*	*	*
71432	Benzene	0.005924	*	*	*	*	*
75070	Acetaldehyde	0.024909	*	*	*	*	*
91203	Naphthalene	0.000626	*	*	*	*	*
100414	Ethyl Benzene	0.000347	*	*	*	*	*
106990	1,3-Butadiene	0.006913	*	*	*	*	*
107028	Acrolein	0.001078	*	*	*	*	*
108907	Chlorobenzn	6.36E-06	*	*	*	*	*
110543	Hexane	0.000855	*	*	*	*	*
115071	Propylene	0.014851	*	*	*	*	*
7439921	Lead	0.000264	*	*	*	*	*
7439965	Manganese	9.86E-05	*	*	*	*	*
7439976	Mercury	6.36E-05	*	*	*	*	*
7440020	Nickel	0.000124	*	*	*	*	*
7440382	Arsenic	5.09E-05	*	*	*	*	*
7440439	Cadmium	4.77E-05	*	*	*	*	*
7440473	Chromium	1.91E-05	*	*	*	*	*
7440508	Copper	0.00013	*	*	*	*	*
7440666	Zinc	0.000712	*	*	*	*	*
7647010	Hydrochloric acid	0.005924	*	*	*	*	*
7782492	Selenium	7E-05	*	*	*	*	*
18540299	Chromium, hexavalent (and compounds)	3.18E-06	*	*	*	*	*

Note: Air toxics based on SBCAPCD DICE emission factors. Speciated emission factors from VCAPCD combustion emission factors (Houly emissions used for acute analysis only, Annual emissions not used in health risk assessment
* denotes not applicable or value is zero

Table 3-16
Generator 1000 hp - Air Toxic Emission Rates

		2008-Baseline		2014 Future		2014 Future Plus	
CAS	**Pollutant**	**(lbs/hour)**	**(lbs/year)**	**(lbs/hour)**	**(lbs/year)**	**(lbs/hour)**	**(lbs/year)**
50000	Formaldehyde	*	*	0.182967	*	0.182967	*
108883	Toluene	*	*	0.011172	*	0.011172	*
1330207	Xylenes	*	*	0.004494	*	0.004494	*
9901	Diesel Exhaust PM	*	*	0.08	1.76	0.16	3.52
1151	PAHs (total)	*	*	0.005925	*	0.005925	*
71432	Benzene	*	*	0.019748	*	0.019748	*
75070	Acetaldehyde	*	*	0.08303	*	0.08303	*
91203	Naphthalene	*	*	0.002088	*	0.002088	*
100414	Ethyl Benzene	*	*	0.001155	*	0.001155	*
106990	1,3-Butadiene	*	*	0.023044	*	0.023044	*
107028	Acrolein	*	*	0.003593	*	0.003593	*
108907	Chlorobenzn	*	*	2.12E-05	*	2.12E-05	*
110543	Hexane	*	*	0.002851	*	0.002851	*
115071	Propylene	*	*	0.049502	*	0.049502	*
7439921	Lead	*	*	0.00088	*	0.00088	*
7439965	Manganese	*	*	0.000329	*	0.000329	*
7439976	Mercury	*	*	0.000212	*	0.000212	*
7440020	Nickel	*	*	0.000413	*	0.000413	*
7440382	Arsenic	*	*	0.00017	*	0.00017	*
7440439	Cadmium	*	*	0.000159	*	0.000159	*
7440473	Chromium	*	*	6.36E-05	*	6.36E-05	*
7440508	Copper	*	*	0.000435	*	0.000435	*
7440666	Zinc	*	*	0.002374	*	0.002374	*
7647010	Hydrochloric acid	*	*	0.019748	*	0.019748	*
7782492	Selenium	*	*	0.000233	*	0.000233	*
18540299	Chromium, hexavalent (and compounds)	*	*	1.06E-05	*	1.06E-05	*

Note: Air toxics based on SBCAPCD DICE emission factors. Speciated emission factors from VCAPCD combustion emission factors (Houly emissions used for acute analysis only, Annual emissions not used in health risk assessment
* denotes not applicable or value is zero

4.0 MODELING PARAMETERS

The dispersion modeling and risk assessment were conducted using the CARB's HARP software, Version 1.4a (Build 23.07.00). The Control options that were used for the dispersion model are found in Table 4-1.

Table 4-1
Modeling Parameters

Control Options	Assumption
Use Regulatory Default?	No
Rural or Urban?	Rural
Gradual Plume Rise?	Yes
Stack Tip Downwash?	Yes
Buoyancy Induced Dispersion?	No
Calms Processing?	No
Missing Data Processing?	No
Include Building Downwash?	Yes
Lowbound Option?	No
Terrain Model?	Flat

4.1 RECEPTORS

Receptors are locations where dispersion model predicts downwind concentrations. Receptors were placed at 25 meter or less intervals around the facility boundary and in a regular grid extending 1.2 kilometers in all directions at 50 meter intervals. All receptors were identified as either residential or commercial. Residential receptors represent residential locations to the east and southwest of the facility. All boundary receptors were identified as commercial as well as all other locations except an area to the immediate northeast of the facility, which is zoned industrial but appears to include some residences. These receptors were identified as mixed, and were evaluated with the residential scenario. Grid and receptor data may be found in Appendix B in specific folders for each scenario. A receptor grid for the project is provided in Figure 4-1

4.2 METEOROLOGICAL DATA

The meteorological data used to support the modeling efforts was provided by SBCAPCD. The data was provided in ASCI format and is considered complete without data gaps (SBCAPCD). A windrose, or diagram of the speed of wind from different directions, of the data is provided in Figure 4-2.

4.3 SOURCE TREATMENT

The emission sources from GSD are characterized by source types, required by the ARB Guidelines (ARB, 2006) and as documented in Section 2.0 of this report. The combustion sources as well as the headworks were treated as point sources; the emissions from specific processes were treated as area sources if there was no specific stack associated with the device. The release parameters include user-specified release height and initial horizontal and vertical dispersion for area sources and release height, diameter, exit velocity and temperature for point sources. Modeling took into account building downwash if for all point sources, however only the boiler, generators and microturbine were affected by downwsh. The device and modeling parameters for each source are provided in Table 4-2

Table 4-2
Device Stack and Modeling Parameters

Device Identification	Name	Stack Number	Area/Point	UTM (X)	UTM (Y)	Height (ft)	Diameter (ft)	X (initial)	Y (initial)	Z (initial)	TEMP (F)	Flow Rate (CFM)	Exit Velocity(ft/sec)
1	Headwork's	1	Point	15398.35	-399245	15.19	0.99	*	*	*	68	1956.71	2539.37
2	Mechanical Thickener #1 (no emissions)	2	Point	15426.09	-399260	15.19	0.99	*	*	*	*	*	*
3	Mechanical Thickener #2 (no emissions)	2	Point	15426.09	-399260	15.19	0.99	*	*	*	*	*	*
4	Primary Sedimentation	3	Area	15405.26	-399290	10	*	66.02	66.02	*	*	*	*
5	Primary Sedimentation	4	Area	15376.21	-399286	10	*	66.02	66.02	*	*	*	*
6	Primary Sedimentation	5	Area	15350.61	-399282	10	*	66.02	66.02	*	*	*	*
7	Biofilter #1	6	Area	15347.41	-399197	8	*	115.21	115.21	*	*	*	*
8	Biofilter #2 (addition)	7	Area	15297.68	-399198	8	*	115.21	115.21	*	*	*	*
9	Solids Contact Chamber	8	Area	15394.41	-399113	*	*	106	12	*	*	*	*
10	Secondary Sedimentation	9	Area	15364.12	-399131	16	*	53.17	53.17	*	*	*	*
11	Secondary Sedimentation	10	Area	15392.26	-399131	16	*	53.17	53.17	*	*	*	*
12	Secondary Sedimentation (addition)	11	Area	15391.64	-399100	16	*	66.47	66.47	*	*	*	*
13	Secondary Sedimentation (addition)	12	Area	15363.5	-399101	16	*	66.47	66.47	*	*	*	*
14	Aeration Basin (addition)	13	Area	15377.07	-399069	*	*	114.83	65.62	*	*	*	*
15	Boilers (2-one stack)	14	Point	15284.82	-399223	14.20	22.37	*	*	*	399	773.58	1.97
16	Flare	15	Point	15388.79	-399209	20.15	0.99	*	*	*	1500	2639.28	3425.20
17	Sludge Stabilization Basin #1	16	Area	15470.25	-399086	*	*	233.92	233.92	*	*	*	*
18	Sludge Stabilization Basin #2	17	Area	15472.95	-399206	*	*	333.99	333.99	*	*	*	*
19	Sludge Stabilization Basin #3	18	Area	15490	-399314	*	*	328.08	328.08	*	*	*	*
20	Equalization Pond (Basin #3)	19	Area	15490	-399314	*	*	328.08	328.08	*	*	*	*
21	Sludge Drying Bed	20	Area	15354.9	-399342	*	*	328.08	328.08	*	*	*	*
22	Dredge	21	Point	15472.95	-399206	9.91	0.33	*	*	*	660	1009.68	11811.02
23	Generator (390 hp)	22	Point	15298.02	-399244	25.00	0.33	*	*	*	660	1009.68	11811.02
24	Generator (600 hp)	23	Point	15298	-399241	25.00	0.50	*	*	*	660	2858.76	14566.93
25	Generator (1000 hp)	24	Point	15298	-399247	25.00	1.10	*	*	*	660	7946.58	8366.14
26	Chlorine Contact Tank	25	Area	15416.78	-399334	*	*	45.93	127.95	*	*	*	*
27	Microturbine	26	Point	15298.24	-399251	9.91	0.66	*	*	*	468	3771.30	11012.17

Note: * denotes not applicable or value is zero

Sludge Stabilization Basin 2	*	*	*	*	*	*	*
Sludge Stabilization Basin 3	*	*	*	*	*	*	*
Total	**4.06E-06**	**2.92E-07**	**3.96E-08**	*	**3.32E-07**	**4.40E-06**	**100**

Note: * denotes not applicable or value is zero

5.3 FUTURE - RISK

Figures 5-6, 5-8 and 5-9 show isopleths of the estimated cancer risk, acute risk, and chronic risk respectively, for the residential exposure scenario. Figure 5-6 indicates that the extent of the area exposed to a potential cancer risk of 10 in a million or greater extends a maximum of 1/4 mile to the east of the facility. Figure 5-8 indicates the acute HI of 0.1 or greater extends for a distance of 1/2 mile to the south of the facility, the direction associated with drainage flows which occur during the night under very stable atmospheric conditions. Figure 5-9 indicates the chronic HI exceeds the 0.1 level at maximum of 200 feet to the east of the facility at one location towards the southern end. Figure 5-10 shows the location of the maximum estimated cancer risk for point of maximum impact, residential, and commercial receptors as well as the location of the maximum acute and chronic HIs. The maximum acute HI is 0.74, the maximum chronic HI is 0.16.

5.3.1 Future-Cancer Risk PMI/MEIR

The estimated cancer risk to the MEIR is 7.27 in a million. The PMI/MEIR is located approximately 500 feet directly east of the facility. Table 5-6 shows a breakdown of cancer risk by pollutant and exposure pathway. Table 5-7 shows a breakdown of cancer risk by source. Inspection of Table 5-6 indicates that 90 percent of the risk is associated with PAH emissions and 4 percent of the risk is associated with dichlorobenzene and formaldehyde emissions. Inspection of Table 5-7 indicates that 85 percent of the risk is associated with the flare and 7 percent of the risk is associated with the boilers.

Table 5-6
Future-Summary of Cancer Risk by Pollutant at MEIR

CAS	Pollutant	INHAL	DERM	SOIL	VEG	ORAL	TOTAL	Percent
76131	Chlorinated Fluorocarbon {CFC-113} {1,1,2-Trichloro-1,2,2-trifluoroethane}	*	*	*	*	*	*	*
67663	Chloroform	1.08E-07	*	*	*	*	1.08E-07	1
106467	p-Dichlorobenzene	1.35E-07	*	*	*	*	1.35E-07	2
50000	Formaldehyde	1.80E-07	*	*	*	*	1.80E-07	2
71556	Methyl chloroform {1,1,1-Trichloroethane}	*	*	*	*	*	*	*
75092	Methylene chloride {Dichloromethane}	2.47E-08	*	*	*	*	2.47E-08	*
127184	Perchloroethylene {Tetrachloroethene}	9.01E-08	*	*	*	*	9.01E-08	1
108883	Toluene	*	*	*	*	*	*	*
79016	Trichloroethylene	3.21E-08	*	*	*	*	3.21E-08	*
1330207	Xylenes (mixed)	*	*	*	*	*	*	*
100425	Styrene	*	*	*	*	*	*	*
9901	Diesel engine exhaust, particulate matter (Diesel PM)	1.27E-08	*	*	*	*	1.27E-08	*
1151	PAHs, total, w/o individ. components reported [Treated as B(a)P for HRA]	4.06E-08	1.35E-06	2.02E-07	4.94E-06	6.50E-06	6.54E-06	90
71432	Benzene	1.43E-08	*	*	*	*	1.43E-08	*
75070	Acetaldehyde	6.68E-10	*	*	*	*	6.68E-10	*
91203	Naphthalene	*	*	*	*	*	*	*
100414	Ethyl benzene	1.01E-08	*	*	*	*	1.01E-08	*
106990	1,3-Butadiene	2.52E-09	*	*	*	*	2.52E-09	*
107028	Acrolein	*	*	*	*	*	*	*
108907	Chlorobenzene	*	*	*	*	*	*	*
110543	Hexane	*	*	*	*	*	*	*
115071	Propylene	*	*	*	*	*	*	*
7439921	Lead	*	*	*	*	*	*	*
7439965	Manganese	*	*	*	*	*	*	*
7439976	Mercury	*	*	*	*	*	*	*
7440020	Nickel	4.12E-09	*	*	*	*	4.12E-09	*
7440382	Arsenic	4.07E-09	2.71E-08	1.32E-08	2.49E-08	6.52E-08	6.93E-08	1
7440439	Cadmium	3.40E-08	*	*	*	*	3.40E-08	*
7440473	Chromium	*	*	*	*	*	*	*
7440508	Copper	*	*	*	*	*	*	*
7440666	Zinc	*	*	*	*	*	*	*
7647010	Hydrochloric acid	*	*	*	*	*	*	*
7782492	Selenium	*	*	*	*	*	*	*
1854029	Chromium, hexavalent	*	*	*	*	*	*	*

CAS	Pollutant	INHAL	DERM	SOIL	VEG	ORAL	TOTAL	Percent
9	(& compounds)							
85101	Particulate Matter 10 Microns or Less (PM10)	*	*	*	*	*	*	*
88101	Particulate Matter 2.5 Microns or Less	*	*	*	*	*	*	*
7440393	Barium	*	*	*	*	*	*	*
7440417	Beryllium	1.16E-10	*	*	*	*	1.16E-10	*
7440484	Cobalt	*	*	*	*	*	*	*
7440622	Vanadium (fume or dust)	*	*	*	*	*	*	*
56235	Carbon tetrachloride	1.30E-09	*	*	*	*	1.30E-09	*
75014	Vinyl chloride	4.23E-09	*	*	*	*	4.23E-09	*
75354	Vinylidene chloride	*	*	*	*	*	*	*
79005	1,1,2-Trichloroethane	8.94E-10	*	*	*	*	8.94E-10	*
107062	Ethylene dichloride {EDC}	4.64E-10	*	*	*	*	4.64E-10	*
	Total	**7.00E-07**	**1.38E-06**	**2.15E-07**	**4.96E-06**	**6.57E-06**	**7.27E-06**	**100**

Note: * denotes not applicable or value is zero

Table 5-7
Future-Summary of Cancer Risk by Source at MEIR

Source	INHAL	DERM	SOIL	VEG	ORAL	TOTAL	Percent
Primary Sedimentation	7.13E-08	*	*	*	*	7.13E-08	1
Primary Sedimentation	6.12E-08	*	*	*	*	6.12E-08	1
Biofilter 1	9.17E-08	*	*	*	*	9.17E-08	1
Biofilter 2	1.01E-07	*	*	*	*	1.01E-07	1
Secondary Sedimentation	1.25E-09	*	*	*	*	1.25E-09	*
Secondary Sedimentation (add)	1.49E-09	*	*	*	*	1.49E-09	*
Secondary Sedimentation (add)	1.22E-09	*	*	*	*	1.22E-09	*
Aeration	2.42E-08	*	*	*	*	2.43E-08	*
Chlorine Contact Chamber	1.21E-09	*	*	*	*	1.21E-09	*
Generator (600 Hp)	*	*	*	*	*	*	*
Headworks	1.12E-08	*	*	*	*	1.12E-08	*
Primary Sedimentation	7.09E-08	*	*	*	*	7.09E-08	1
Flare	8.01E-08	1.26E-06	1.89E-07	4.62E-06	6.08E-06	6.16E-06	85
Sludge Dry Bed	7.01E-08	*	*	*	*	7.01E-08	1
Secondary Sedimentation	1.27E-09	*	*	*	*	1.27E-09	*
Boilers (2)	4.78E-08	1.15E-07	2.64E-08	3.46E-07	4.88E-07	5.36E-07	7
Sludge Stabilization Basin 1	*	*	*	*	*	*	*
Sludge Stabilization Basin 2	*	*	*	*	*	*	*
Equalization Basin	3.91E-08	*	*	*	*	3.91E-08	1
Microturbine	1.21E-08	*	*	*	*	1.21E-08	*
Generator (1000 Hp)	1.27E-08	*	*	*	*	1.27E-08	*
Total	**7.00E-07**	**1.38E-06**	**2.15E-07**	**4.96E-06**	**6.57E-06**	**7.27E-06**	**100**

Note: * denotes not applicable or value is zero

5.3.2 Future-Cancer Risk MEIW

The estimated cancer risk to the MEIW is 3.74 in a million. Figure 5-7 shows the isopleth of the estimated cancer risk for the commercial exposure scenario. The MEIW is located along the eastern facility boundary, directly east of the middle sludge stabilization pond. Table 5-8 shows a breakdown of cancer risk by pollutant and exposure pathway. Table 5-9 shows a breakdown of cancer risk by source. Inspection of Table 5-8 indicates that 42 percent of the risk is associated with formaldehyde and 18 percent of the risk is associated with perchloroethylene emissions. Inspection of Table 5-9 indicates that 78 percent of the risk is associated with the equalization basin and 10 percent of the risk is associated with the sludge drying bed and flare.

Table 5-8
Future - Summary of Cancer Risk by Pollutant at MEIW

CAS	Pollutant	INHAL	DERM	SOIL	VEG	ORAL	TOTAL	Percent
76131	Chlorinated Fluorocarbon {CFC-113} {1,1,2-Trichloro-1,2,2-trifluoroethane}	*	*	*	*	*	*	*
67663	Chloroform	5.47E-07	*	*	*	*	5.47E-07	15
106467	p-Dichlorobenzene	5.10E-07	*	*	*	*	5.10E-07	14
50000	Formaldehyde	1.57E-06	*	*	*	*	1.57E-06	42
71556	Methyl chloroform {1,1,1-Trichloroethane}	*	*	*	*	*	*	*
75092	Methylene chloride {Dichloromethane}	1.43E-07	*	*	*	*	1.43E-07	4
127184	Perchloroethylene {Tetrachloroethene}	6.64E-07	*	*	*	*	6.64E-07	18
108883	Toluene	*	*	*	*	*	*	*
79016	Trichloroethylene	3.88E-08	*	*	*	*	3.88E-08	1
1330207	Xylenes (mixed)	*	*	*	*	*	*	*
100425	Styrene	*	*	*	*	*	*	*
9901	Diesel engine exhaust, particulate matter (Diesel PM)	1.95E-09	*	*	*	*	1.95E-09	*
1151	PAHs, total, w/o individ. components reported [Treated as B(a)P for HRA]	3.51E-09	2.01E-07	2.62E-08	*	2.27E-07	2.31E-07	6
71432	Benzene	1.21E-09	*	*	*	*	1.21E-09	*
75070	Acetaldehyde	1.07E-10	*	*	*	*	1.07E-10	*
91203	Naphthalene	*	*	*	*	*	*	*
100414	Ethyl benzene	7.26E-10	*	*	*	*	7.26E-10	*
106990	1,3-Butadiene	7.13E-10	*	*	*	*	7.13E-10	*
107028	Acrolein	*	*	*	*	*	*	*

CAS	Pollutant	INHAL	DERM	SOIL	VEG	ORAL	TOTAL	Percent
108907	Chlorobenzene	*	*	*	*	*	*	*
110543	Hexane	*	*	*	*	*	*	*
115071	Propylene	*	*	*	*	*	*	*
7439921	Lead	*	*	*	*	*	*	*
7439965	Manganese	*	*	*	*	*	*	*
7439976	Mercury	*	*	*	*	*	*	*
7440020	Nickel	7.71E-10	*	*	*	*	7.71E-10	*
7440382	Arsenic	8.47E-10	9.75E-09	4.12E-09	*	1.39E-08	1.47E-08	*
7440439	Cadmium	6.35E-09	*	*	*	*	6.35E-09	*
7440473	Chromium	*	*	*	*	*	*	*
7440508	Copper	*	*	*	*	*	*	*
7440666	Zinc	*	*	*	*	*	*	*
7647010	Hydrochloric acid	*	*	*	*	*	*	*
7782492	Selenium	*	*	*	*	*	*	*
18540299	Chromium, hexavalent (& compounds)	*	*	*	*	*	*	*
85101	Particulate Matter 10 Microns or Less (PM10)	*	*	*	*	*	*	*
88101	Particulate Matter 2.5 Microns or Less	*	*	*	*	*	*	*
7440393	Barium	*	*	*	*	*	*	*
7440417	Beryllium	2.17E-11	*	*	*	*	2.17E-11	*
7440484	Cobalt	*	*	*	*	*	*	*
7440622	Vanadium (fume or dust)	*	*	*	*	*	*	*
56235	Carbon tetrachloride	3.69E-10	*	*	*	*	3.69E-10	*
75014	Vinyl chloride	1.20E-09	*	*	*	*	1.20E-09	*
75354	Vinylidene chloride	*	*	*	*	*	*	*
79005	1,1,2-Trichloroethane	2.53E-10	*	*	*	*	2.53E-10	*
107062	Ethylene dichloride {EDC}	1.31E-10	*	*	*	*	1.31E-10	*
	Total	**3.49E-06**	**2.11E-07**	**3.03E-08**	*	**2.41E-07**	**3.74E-06**	**100**

Note: * denotes not applicable or value is zero

Table 5-9
Summary of Cancer Risk by Source for Future at MEIW

Source	INHAL	DERM	SOIL	VEG	ORAL	TOTAL	Percent
Primary Sedimentation	1.06E-07	*	*	*	*	1.06E-07	3
Primary Sedimentation	8.27E-08	*	*	*	*	8.27E-08	2
Biofilter 1	2.20E-08	*	*	*	*	2.20E-08	1
Biofilter 2	1.47E-08	*	*	*	*	1.47E-08	*
Secondary Sedimentation	1.49E-10	*	*	*	*	1.49E-10	*
Secondary Sedimentation (add)	9.41E-11	*	*	*	*	9.41E-11	*
Secondary Sedimentation (add)	9.41E-11	*	*	*	*	9.41E-11	*
Aereation	1.25E-09	*	*	*	*	1.25E-09	*
Chlorine Contact Chamber	4.00E-09	*	*	*	*	4.00E-09	*
Generator (600 Hp)	*	*	*	*	*	*	*
Headworks	3.66E-09	*	*	*	*	3.66E-09	*
Primary Sedimentation	1.43E-07	*	*	*	*	1.43E-07	4
Flare	5.90E-09	1.70E-07	2.21E-08	0.00E+00	1.92E-07	1.98E-07	5
Sludge Dry Bed	1.89E-07	*	*	*	*	1.89E-07	5
Secondary Sedimentation	1.19E-10	*	*	*	*	1.19E-10	*
Boilers (2)	9.09E-09	4.13E-08	8.22E-09	*	4.96E-08	5.86E-08	2
Sludge Stabilization Basin 1	*	*	*	*	*	*	*
Sludge Stabilization Basin 2	*	*	*	*	*	*	*
Equalization Basin	2.91E-06	*	*	*	*	2.91E-06	78
Microturbine	3.43E-09	*	*	*	*	3.43E-09	*
Generator (1000 Hp)	1.95E-09	*	*	*	*	1.95E-09	*
Total	**3.49E-06**	**2.11E-07**	**3.03E-08**	*	**2.41E-07**	**3.74E-06**	**100**

Note: * denotes not applicable or value is zero

5.4 FUTURE DESIGN - RISK

Figures 5-11, 5-13, 5-14 and 5-15 show isopleths of the estimated cancer risk, acute risk (Simplified), acute risk (Refined) and chronic risk respectively, for the residential exposure scenario. Figure 5-11 indicates that the extent of the area exposed to a potential cancer risk of 10 in a million or greater extends almost ¼ mile to the east of the facility, the downwind direction. Figure 5-13 indicates the acute HI (simplified) of 0.2 or greater extends for a distance of 1/4 mile around the facility. Figure 5-14 indicates the acute HI (refined) of 0.2 or greater extends for a distance of 1/8 mile around the facility. Figure 5-15 indicates the chronic HI exceeds the 0.1 level a maximum of 200 feet to the east of the facility and to the south of the facility. Figure 5-16 shows the location of the maximum estimated cancer risk for point of maximum impact, residential, and commercial receptors as well as the location of the maximum acute and chronic HIs. The maximum acute HI (Simplified) is 1.13, the maximum chronic HI is 0.275. The maximum acute HI value of 1.13 exceeds the threshold. The values were further evaluated with the refined method in HARP. The value from the refined calculation determined the acute HI at 0.983. The acute HI (Simplified) results are summarized by pollutant and source in Tables 5-10 and 5-11, respectively. The refined analysis shows the maximum acute HI at 0.983.

5.4.1 Future Design-Acute HI

Table 5-10
Future Design – Summary Acute HI (Simplified) by Pollutant

CAS	Pollutant	Maximum Target Organ EYE	Percent
76131	Chlorinated Fluorocarbon {CFC-113} {1,1,2-Trichloro-1,2,2-trifluoroethane}	*	*
67663	Chloroform	*	*
106467	p-Dichlorobenzene	*	*
50000	Formaldehyde	1.05E+00	96
71556	Methyl chloroform {1,1,1-Trichloroethane}	*	*
75092	Methylene chloride {Dichloromethane}	*	*
127184	Perchloroethylene {Tetrachloroethene}	4.44E-04	*
108883	Toluene	7.11E-04	*
79016	Trichloroethylene	*	*
1330207	Xylenes (mixed)	8.33E-03	1
100425	Styrene	4.98E-03	*
9901	Diesel engine exhaust, particulate matter (Diesel PM)	*	*
1151	PAHs, total, w/o individ. components reported [Treated as B(a)P for HRA]	*	*
71432	Benzene	*	*
75070	Acetaldehyde	2.32E-03	*
91203	Naphthalene	*	*
100414	Ethyl benzene	*	*
106990	1,3-Butadiene	*	*
107028	Acrolein	2.04E-02	2
108907	Chlorobenzene	*	*
110543	Hexane	*	*
115071	Propylene	*	*
7439921	Lead	*	*
7439965	Manganese	*	*
7439976	Mercury	*	*
7440020	Nickel	*	*
7440382	Arsenic	*	*
7440439	Cadmium	*	*
7440473	Chromium	*	*
7440508	Copper	*	*
7440666	Zinc	*	*
7647010	Hydrochloric acid	1.20E-04	*
7782492	Selenium	*	*
18540299	Chromium, hexavalent (& compounds)	*	*
85101	Particulate Matter 10 Microns or Less (PM10)	*	*
88101	Particulate Matter 2.5 Microns or Less	*	*

CAS	Pollutant	Maximum Target Organ EYE	Percent
7440393	Barium	*	*
7440417	Beryllium	*	*
7440484	Cobalt	*	*
7440622	Vanadium (fume or dust)	1.12E-04	*
56235	Carbon tetrachloride	*	*
75014	Vinyl chloride	5.66E-08	*
75354	Vinylidene chloride	*	*
79005	1,1,2-Trichloroethane	*	*
107062	Ethylene dichloride {EDC}	*	*
	Total	**1.09E+00**	**100**

Table 5-11
Future Design - Summary of Acute HI by Source

Source	TOTAL	Percent
Primary Sedimentation	2.25E-01	21
Primary Sedimentation	2.01E-01	18
Biofilter 1	6.70E-03	1
Biofilter 2	5.50E-03	1
Secondary Sedimentation	5.04E-04	*
Secondary Sedimentation (add)	4.67E-04	*
Secondary Sedimentation (add)	4.77E-04	*
Aeration	3.90E-03	*
Chlorine Contact Chamber	1.02E-06	*
Generator (600 Hp)	3.38E-02	3
Headworks	7.00E-04	*
Primary Sedimentation	2.40E-01	22
Flare	2.61E-03	*
Sludge Dry Bed	8.90E-02	8
Secondary Sedimentation	5.39E-04	*
Boilers (2)	2.16E-03	*
Sludge Stabilization Basin 1	5.52E-05	*
Sludge Stabilization Basin 2	9.35E-05	*
Equalization Basin	2.44E-01	22
Microturbine	1.03E-03	*
Generator (1000 Hp)	2.96E-02	3
Total	**1.09E+00**	**100**

5.4.2 Future Design-Cancer Risk PMI/MEIR

The estimated cancer risk to the MEIR is 7.78 in a million. The PMI/MEIR is located approximately 200 feet directly east of the facility. Table 5-12 shows a breakdown of cancer risk by pollutant and exposure pathway. Table 5-13 shows a breakdown of cancer risk by source. Inspection of Table 5-12 indicates that 85 percent of the risk is associated with PAH emissions and 4 percent of the risk is associated with formaldehyde. Inspection of Table 5-13 indicates that 80 percent of the risk is associated with the flare and 7 percent of the risk is associated with the boilers.

Table 5-12
Future Design - Summary of Cancer Risk by Pollutant at MEIR

CAS	Pollutant	INHAL	DERM	SOIL	VEG	ORAL	TOTAL	Percent
76131	Chlorinated Fluorocarbon {CFC-113} {1,1,2-Trichloro-1,2,2-trifluoroethane}	*	*	*	*	*	*	*
67663	Chloroform	1.91E-07	*	*	*	*	1.91E-07	2
106467	p-Dichlorobenzene	2.37E-07	*	*	*	*	2.37E-07	3
50000	Formaldehyde	3.01E-07	*	*	*	*	3.01E-07	4
71556	Methyl chloroform {1,1,1-Trichloroethane}	*	*	*	*	*	*	*
75092	Methylene chloride {Dichloromethane}	4.35E-08	*	*	*	*	4.35E-08	1
127184	Perchloroethylene {Tetrachloroethene}	1.59E-07	*	*	*	*	1.59E-07	2
108883	Toluene	*	*	*	*	*	*	*
79016	Trichloroethylene	5.67E-08	*	*	*	*	5.67E-08	1
1330207	Xylenes (mixed)	*	*	*	*	*	*	*
100425	Styrene	*	*	*	*	*	*	*
9901	Diesel engine exhaust, particulate matter (Diesel PM)	2.55E-08	*	*	*	*	2.55E-08	*
1151	PAHs, total, w/o individ. components reported [Treated as B(a)P for HRA]	4.11E-08	1.37E-06	2.04E-07	5.00E-06	6.58E-06	6.62E-06	85
71432	Benzene	1.44E-08	*	*	*	*	1.44E-08	*
75070	Acetaldehyde	6.68E-10	*	*	*	*	6.68E-10	*
91203	Naphthalene	*	*	*	*	*	*	*
100414	Ethyl benzene	1.01E-08	*	*	*	*	1.01E-08	*
106990	1,3-Butadiene	2.56E-09	*	*	*	*	2.56E-09	*
107028	Acrolein	*	*	*	*	*	*	*
108907	Chlorobenzene	*	*	*	*	*	*	*
110543	Hexane	*	*	*	*	*	*	*
115071	Propylene	*	*	*	*	*	*	*
7439921	Lead	*	*	*	*	*	*	*
7439965	Manganese	*	*	*	*	*	*	*
7439976	Mercury	*	*	*	*	*	*	*
7440020	Nickel	4.29E-09	*	*	*	*	4.29E-09	*
7440382	Arsenic	4.07E-09	2.71E-08	1.32E-08	2.49E-08	6.52E-08	6.93E-08	1
7440439	Cadmium	3.68E-08	*	*	*	*	*	*
7440473	Chromium	*	*	*	*	*	*	*

CAS	Pollutant	INHAL	DERM	SOIL	VEG	ORAL	TOTAL	Percent
7440508	Copper	*	*	*	*	*	*	*
7440666	Zinc	*	*	*	*	*	*	*
7647010	Hydrochloric acid	*	*	*	*	*	*	*
7782492	Selenium	*	*	*	*	*	*	*
18540299	Chromium, hexavalent (& compounds)	*	*	*	*	*	*	*
85101	Particulate Matter 10 Microns or Less (PM10)	*	*	*	*	*	*	*
88101	Particulate Matter 2.5 Microns or Less	*	*	*	*	*	*	*
7440393	Barium	*	*	*	*	*	*	*
7440417	Beryllium	1.16E-10	*	*	*	*	1.16E-10	*
7440484	Cobalt	*	*	*	*	*	*	*
7440622	Vanadium (fume or dust)	*	*	*	*	*	*	*
56235	Carbon tetrachloride	1.30E-09	*	*	*	*	1.30E-09	*
75014	Vinyl chloride	4.23E-09	*	*	*	*	4.23E-09	*
75354	Vinylidene chloride	*	*	*	*	*	*	*
79005	1,1,2-Trichloroethane	8.94E-10	*	*	*	*	8.94E-10	*
107062	Ethylene dichloride {EDC}	4.69E-10	*	*	*	*	4.69E-10	*
	Total	**1.13E-06**	**1.39E-06**	**2.18E-07**	**5.02E-06**	**6.64E-06**	**7.78E-06**	**100**

Note: * denotes not applicable or value is zero

Table 5-13
Future Design - Summary of Cancer Risk by Source at MEIR

Source	INHAL	DERM	SOIL	VEG	ORAL	TOTAL	Percent
Primary Sedimentation	1.26E-07	*	*	*	*	1.26E-07	2
Primary Sedimentation	1.08E-07	*	*	*	*	1.08E-07	1
Biofilter 1	1.62E-07	*	*	*	*	1.62E-07	2
Biofilter 2	1.78E-07	*	*	*	*	1.78E-07	2
Secondary Sedimentation	2.20E-09	*	*	*	*	2.20E-09	*
Secondary Sedimentation (add)	2.63E-09	*	*	*	*	2.63E-09	*
Secondary Sedimentation (add)	2.15E-09	*	*	*	*	2.15E-09	*
Aereation	4.30E-08	*	*	*	*	4.30E-08	1
Chlorine Contact Chamber	2.15E-09	*	*	*	*	2.15E-09	*
Generator (600 Hp)	*	*	*	*	*	*	*
Headworks	1.97E-08	*	*	*	*	1.97E-08	*
Primary Sedimentation	1.25E-07	*	*	*	*	1.25E-07	2
Flare	8.06E-08	1.28E-06	1.91E-07	4.67E-06	6.15E-06	6.23E-06	80
Sludge Dry Bed	1.24E-07	*	*	*	*	1.24E-07	2
Secondary Sedimentation	2.24E-09	*	*	*	*	2.24E-09	*
Boilers (2)	5.09E-08	1.15E-07	2.64E-08	3.46E-07	4.88E-07	5.39E-07	7
Sludge Stabilization Basin 1	*	*	*	*	*	*	*
Sludge Stabilization Basin 2	*	*	*	*	*	*	*
Equalization Basin	6.89E-08	*	*	*	*	6.89E-08	1
Microturbine	1.22E-08	*	*	*	*	1.22E-08	*

Source	INHAL	DERM	SOIL	VEG	ORAL	TOTAL	Percent
Generator (1000 Hp)	2.55E-08	*	*	*	*	2.55E-08	*
Total	**1.13E-06**	**1.39E-06**	**2.18E-07**	**5.02E-06**	**6.64E-06**	**7.78E-06**	**100**

Note: * denotes not applicable or value is zero

5.4.3 Future Design-Cancer Risk MEIW

The estimated cancer risk to the MEIW is 6.40 in a million. Figure 5-12 shows the isopleth of the estimated cancer risk for the commercial exposure scenario. The MEIW is located along the eastern facility boundary, directly east of the middle sludge stabilization pond. Table 5-14 shows a breakdown of cancer risk by pollutant and exposure pathway. Table 5-15 shows a breakdown of cancer risk by source. Inspection of Table 5-14 indicates that 43 percent of the risk is associated with formaldehyde and 18 percent of the risk is associated with perchloroethylene. Inspection of Table 5-15 indicates that 80 percent of the risk is associated with the equalization basin and 5 percent of the risk is associated with the sludge drying bed.

Table 5-14
Future Design - Summary of Cancer Risk by Pollutant at MEIW

CAS	Pollutant	INHAL	DERM	SOIL	VEG	ORAL	TOTAL	Percent
76131	Chlorinated Fluorocarbon {CFC-113} {1,1,2-Trichloro-1,2,2-trifluoroethane}	*	*	*	*	*	*	*
67663	Chloroform	9.65E-07	*	*	*	*	9.65E-07	15
106467	p-Dichlorobenzene	8.99E-07	*	*	*	*	8.99E-07	14
50000	Formaldehyde	2.78E-06	*	*	*	*	2.78E-06	43
71556	Methyl chloroform {1,1,1-Trichloroethane}	*	*	*	*	*	*	*
75092	Methylene chloride {Dichloromethane}	2.53E-07	*	*	*	*	2.53E-07	4
127184	Perchloroethylene {Tetrachloroethene}	1.17E-06	*	*	*	*	1.17E-06	18
108883	Toluene	*	*	*	*	*	*	*
79016	Trichloroethylene	6.84E-08	*	*	*	*	6.84E-08	1
1330207	Xylenes (mixed)	*	*	*	*	*	*	*
100425	Styrene	*	*	*	*	*	*	*
9901	Diesel engine exhaust, particulate matter (Diesel PM)	3.89E-09	*	*	*	*	3.89E-09	*
1151	PAHs, total, w/o individ. components reported [Treated as B(a)P for HRA]	3.54E-09	2.03E-07	2.64E-08	*	2.30E-07	2.33E-07	4
71432	Benzene	1.22E-09	*	*	*	*	1.22E-09	*
75070	Acetaldehyde	1.07E-10	*	*	*	*	1.07E-10	*
91203	Naphthalene	*	*	*	*	*	*	*
100414	Ethyl benzene	7.26E-10	*	*	*	*	7.26E-10	*
106990	1,3-Butadiene	7.25E-10	*	*	*	*	7.25E-10	*
107028	Acrolein	*	*	*	*	*	*	*

CAS	Pollutant	INHAL	DERM	SOIL	VEG	ORAL	TOTAL	Percent
108907	Chlorobenzene	*	*	*	*	*	*	*
110543	Hexane	*	*	*	*	*	*	*
115071	Propylene	*	*	*	*	*	*	*
7439921	Lead	*	*	*	*	*	*	*
7439965	Manganese	*	*	*	*	*	*	*
7439976	Mercury	*	*	*	*	*	*	*
7440020	Nickel	8.03E-10	*	*	*	*	8.03E-10	*
7440382	Arsenic	8.47E-10	9.75E-09	4.12E-09	*	1.39E-08	1.47E-08	*
7440439	Cadmium	6.88E-09	*	*	*	*	6.88E-09	*
7440473	Chromium	*	*	*	*	*	*	*
7440508	Copper	*	*	*	*	*	*	*
7440666	Zinc	*	*	*	*	*	*	*
7647010	Hydrochloric acid	*	*	*	*	*	*	*
7782492	Selenium	*	*	*	*	*	*	*
18540299	Chromium, hexavalent (& compounds)	*	*	*	*	*	*	*
85101	Particulate Matter 10 Microns or Less (PM10)	*	*	*	*	*	*	*
88101	Particulate Matter 2.5 Microns or Less	*	*	*	*	*	*	*
7440393	Barium	*	*	*	*	*	*	*
7440417	Beryllium	2.17E-11	*	*	*	*	2.17E-11	*
7440484	Cobalt	*	*	*	*	*	*	*
7440622	Vanadium (fume or dust)	*	*	*	*	*	*	*
56235	Carbon tetrachloride	3.69E-10	*	*	*	*	3.69E-10	*
75014	Vinyl chloride	1.20E-09	*	*	*	*	1.20E-09	*
75354	Vinylidene chloride	*	*	*	*	*	*	*
79005	1,1,2-Trichloroethane	2.53E-10	*	*	*	*	2.53E-10	*
107062	Ethylene dichloride {EDC}	1.33E-10	*	*	*	*	1.33E-10	*
	Total	**6.16E-06**	**2.13E-07**	**3.05E-08**	*	**2.44E-07**	**6.40E-06**	**100**

Note: * denotes not applicable or value is zero

Table 5-15
Future Design -Summary of Cancer Risk by Source at MEIW

Source	INHAL	DERM	SOIL	VEG	ORAL	TOTAL	Percent
Primary Sedimentation	1.88E-07	*	*	*	*	1.88E-07	3
Primary Sedimentation	1.46E-07	*	*	*	*	1.46E-07	2
Biofilter 1	3.89E-08	*	*	*	*	3.89E-08	1
Biofilter 2	2.58E-08	*	*	*	*	2.58E-08	*
Secondary Sedimentation	2.63E-10	*	*	*	*	2.63E-10	*
Secondary Sedimentation (add)	1.66E-10	*	*	*	*	1.66E-10	*
Secondary Sedimentation (add)	1.66E-10	*	*	*	*	1.66E-10	*
Aereation	2.21E-09	*	*	*	*	2.21E-09	*
Chlorine Contact Chamber	7.10E-09	*	*	*	*	7.10E-09	*
Generator (600 Hp)	*	*	*	*	*	*	*

Source	INHAL	DERM	SOIL	VEG	ORAL	TOTAL	Percent
Headworks	6.47E-09	*	*	*	*	6.47E-09	*
Primary Sedimentation	2.53E-07	*	*	*	*	2.53E-07	4
Flare	5.94E-09	1.72E-07	2.23E-08	*	1.94E-07	2.00E-07	3
Sludge Dry Bed	3.34E-07	*	*	*	*	3.34E-07	5
Secondary Sedimentation	2.10E-10	*	*	*	*	2.10E-10	*
Boilers (2)	9.65E-09	4.13E-08	8.22E-09	*	4.96E-08	5.92E-08	1
Sludge Stabilization Basin 1	*	*	*	*	*	*	*
Sludge Stabilization Basin 2	*	*	*	*	*	*	*
Equalization Basin	5.13E-06	*	*	*	*	5.13E-06	80
Microturbine	3.45E-09	*	*	*	*	3.45E-09	*
Generator (1000 Hp)	3.89E-09	*	*	*	*	3.89E-09	*
Total	**6.16E-06**	**2.13E-07**	**3.05E-08**	*	**2.44E-07**	**6.40E-06**	**100**

Note: * denotes not applicable or value is zero

Figure 5-11 Isopleth Cancer Residential (Future Design)

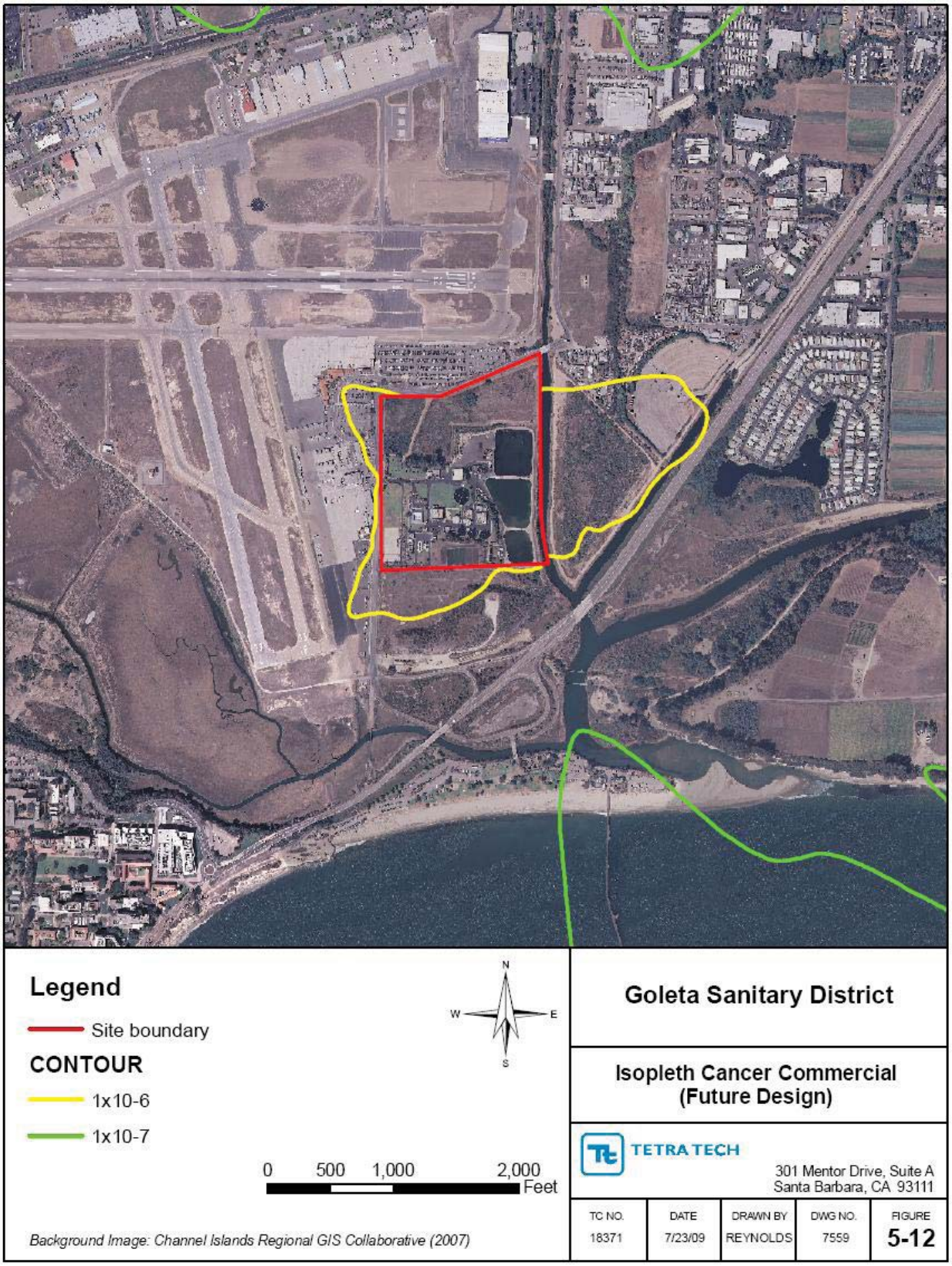

Figure 5-12 Isopleth Cancer Commercial (Future Design)

Figure 5-13 Isopleth Acute (Future Design)

Legend
Site boundary
CONTOUR
0.5
0.2
N
W
E
S
0
500
1,000
2,000
Feet
Background Image: Channel Islands Regional GIS Collaborative (2007)
Goleta Sanitary District
Isopleth Acute Refined
(Future Design)
TETRA TECH
301 Mentor Drive, Suite A
Santa Barbara, CA 93111
TC NO.
18371
DATE
7/23/09
DRAWN BY
REYNOLDS
DWG NO.
7445
FIGURE
5-14

Figure 5-15 Isopleth Chronic (Future Design)

Figure 5-16 PMI/MEI (Future Design)

6.0 CONCLUSIONS/RECOMMENDATIONS

An air toxics HRA was performed for GSD. All analyses have been conducted in accordance with the SBAPCD guidelines (SBAPCD 2008) and the OEHHA guidelines (OEHHA 2003). The findings from the HRA indicate the following for receptor points representing commercial, residential and mixed locations

- The point of maximum impact and maximum estimated cancer risk at residential locations, or PMI/MEIR, is 7.0 in a million, 7.3 in a million, 7.8 in a million for the baseline, future, and future design scenarios; respectively. The maximum acute HI is 0.68, 0.74 and 0.98 for the baseline, future, and future design scenarios; respectively. The maximum chronic HI is 0.04, 0.16 and 0.28 for the baseline, future, and future design scenarios; respectively

- The maximum estimated cancer risk at commercial locations, or MEIW, is 4.4 in a million, 3.7 in a million, 6.4 in a million for the baseline, future, and future design scenarios; respectively.

The results of this HRA indicate that implementation of the proposed project would reduce the risk to the exposed population. The estimated risk is below the SBAPCD threshold of ten in a million for all cases.

Non-cancer health risks can include **acute**, or short- term health effect such as eye irritation, respiratory irritation, and headaches, and **chronic**, or long-term effects such as permanent damage to organs, the central nervous system, or reproductive functions, and developmental problems in children. Non-cancer health risk is defined by the "Hazard Index" (HI). The HI is a ratio of the predicted exposure concentration of the facility's reported emissions to a concentration considered below risk adverse health effects are not exposed to public health professionals. In all cases the results from the current and proposed actions are less than 1.

Goleta Sanitary District Mitigated Negative Declaration for the Wastewater Treatment Plant Upgrade Project

(SCH No. 2008061141)

September 2009

Submitted to:

Goleta Sanitary District
One William Moffett Place
Goleta, CA 93117

Prepared by:

Tetra Tech, Inc.
301 Mentor Drive, Suite A
Santa Barbara, California 93111

TABLE OF CONTENTS

1.0 INTRODUCTION 1-1
1.1 PURPOSE OF THE MITIGATED NEGATIVE DECLARATION 1-1
1.2 PUBLIC PARTICIPATION 1-1

2.0 PROJECT DESCRIPTION 2-1
2.1 PROJECT BACKGROUND AND OBJECTIVES 2-1
2.2 LOCATION 2-2
2.3 PROJECT COMPONENTS 2-3
2.3.1 Liquids Treatment 2-3
2.3.1.1 Primary Effluent Equalization 2-11
2.3.1.2 Biofilter and Biofilter Pumping Stations 2-11
2.3.1.3 Activated Sludge Treatment Process 2-11
2.3.1.4 Secondary Effluent Pumping 2-12
2.3.1.5 Secondary Effluent Disinfection 2-12
2.3.1.6 Final Effluent Pumping Station 2-12
2.3.2 Solids Treatment 2-13
2.3.2.1 Waste Activated Sludge (WAS) Thickening 2-13
2.3.2.2 Anaerobic Digestion 2-13
2.3.2.3 Solids Stabilization Basins 2-14
2.3.2.4 Sludge Holding Tank 2-14
2.3.2.5 Solids Handling Building 2-14
2.3.2.6 Cogeneration System 2-14
2.3.3 Common Improvements 2-14
2.3.3.1 Site Process Piping and Conduits 2-14
2.3.3.2 Headworks Area Improvement 2-15
2.3.3.3 Miscellaneous Structural Repairs 2-15
2.3.3.4 Space Utilization 2-15
2.3.3.5 Equipment Upgrade and Replacement 2-15
2.4 PROJECT PHASING 2-15
2.5 CONSTRUCTION BEST MANAGEMENT PRACTICES 2-18

3.0 EXISTING CONDITIONS 3-1
3.1 AESTHETICS 3-1
3.2 AGRICULTURAL RESOURCES 3-1
3.3 AIR QUALITY 3-1
3.3.1 Air Quality Setting 3-1
3.3.1.1 Regional Climate 3-1
3.3.1.2 Local Climate 3-3
3.3.1.3 Existing Air Quality 3-3
3.3.2 Regulatory Setting 3-5
3.3.2.1 Federal and State Clean Air Acts 3-5
3.3.2.2 Attainment Status 3-8
3.3.2.3 Santa Barbara Clean Air Plan (CAP) 3-8
3.3.2.4 Prevention of Significant Deterioration (PSD) Program 3-9
3.3.2.5 General Air Conformity 3-9
3.3.2.6 Global Climate Change and Greenhouse Gases (GHGs) 3-10
3.4 BIOLOGICAL RESOURCES 3-10

3.5 CULTURAL RESOURCES 3-10
3.6 GEOLOGY AND SOILS 3-11
3.6.1 Regional Geologic Setting 3-11
3.6.2 Local Geologic Setting 3-12
3.6.3 Earth Materials 3-12
3.6.4 Soil Stratigraphy 3-13
3.6.5 Seismicity 3-21
3.6.5.1 Alquist-Priolo Earthquake Fault Zones 3-22
3.6.5.2 July 2009 Fault Investigation for the Proposed Project 3-22
3.6.6 Liquefaction 3-24
3.6.6.1 Regional Liquefaction Data 3-24
3.6.6.2 Site Specific Liquefaction Analysis 3-24
3.6.7 Landslides 3-24
3.6.8 Expansive Soils 3-25
3.7 HAZARDS AND HAZARDOUS MATERIALS 3-25
3.8 HYDROLOGY AND WATER QUALITY 3-25
3.8.1 Regional Hydrogeologic Setting 3-25
3.8.2 Local Hydrogeologic Conditions 3-26
3.8.3 Surface Water 3-27
3.8.4 Site Drainage 3-27
3.8.5 Flood Zoning 3-27
3.8.6 Reservoir Failure Flooding 3-27
3.8.7 Tsunamis and Seiches 3-27
3.9 LAND USE AND PLANNING 3-28
3.10 MINERAL RESOURCES 3-28
3.11 NOISE 3-28
3.12 POPULATION AND HOUSING 3-31
3.13 PUBLIC SERVICES 3-31
3.14 RECREATION 3-31
3.15 TRANSPORTATION AND TRAFFIC 3-31
3.16 UTILITIES AND SERVICE SYSTEMS 3-35

4.0 MITIGATED NEGATIVE DECLARATION 4-1
4.1 ORGANIZATION OF ENVIRONMENTAL ANALYSIS 4-1
4.2 TERMINOLOGY USED IN THIS ANALYSIS 4-1
4.3 EVALUATION OF ENVIRONMENTAL IMPACTS 4-1
4A. Aesthetics 4-3
4B. Agriculture Resources 4-5
4C. Air Quality 4-7
4D. Biological Resources 4-21
4E. Cultural Resources 4-31
4F. Geology and Soils 4-35
4G. Hazards/Hazardous Materials 4-39
4H. Hydrology and Water Quality 4-43
4I. Land Use and Planning 4-47
4J. Mineral Resources 4-49
4K. Noise 4-51
4L. Population and Housing 4-61
4M. Public Services 4-63

4N. Recreation and Parks 4-65
4O. Transportation/Traffic....4-67
4P. Utilities and Service Systems 4-69
4Q. Mandatory Findings of Significance....4-73

5.0 ENVIRONMENTAL DETERMINATION....5-1

6.0 REFERENCES 6-1

7.0 REPORT PREPARATION....7-1

LIST OF FIGURES

2-1 Regional Location and Project Vicinity Map 2-5
2-2 Aerial Photograph....2-7
2-3 Project Site Plan....2-9
3-1a Regional Geologic Map....3-15
3-1b Regional Geologic Map Explanation....3-17
3-2 Fault Investigation Trenches....3-19
3-3 FEMA Map 3-29
4K-1 Typical Noise Level From Site Preparation and Excavation Activities 4-55
4K-2 Typical Noise Level From Utility Installation and Installation of Foundations and Pads....4-56
4K-3 Typical Noise Level From Treatment Unit Construction and Installation....4-57

LIST OF GRAPHICS

Graphic 2-1: Process Flow Schematic of the Proposed Liquids Treatment System Upgrade 2-3
Graphic 2-2: Process Schematic of the Upgrade to the Solids Treatment System 2-13

LIST OF TABLES

2-1 Project Components....2-16
2-2 Excavation and Backfill Amounts 2-17
2-3 Construction Equipment for the Basic Project and Supplemental Improvements....2-17
3-1 Climate Data, Santa Barbara Airport....3-3
3-2 Air Quality Data Goleta Monitoring Station....3-4
3-3 Ambient Air Quality Standards 3-6
3-4 Attainment Status....3-8

3-5 Intersection Level of Service Criteria 3-33
3-6 Existing Roadway Levels of Service 3-34
3-7 Existing Intersection Levels of Service 3-34
4C-1 Unmitigated Construction Emissions (tons/year) 4-9
4C-2 Combustion Sources 4-10
4C-3 Operational Emissions due to Mobile Sources 4-11
4C-4 Daily Combustion Source Emissions in pounds/day 4-12
4C-5 Daily Combustion Source Emissions in tons/year 4-12
4C-6 Operational Impacts due to Stationary and Mobile Sources 4-12
4C-7 Nonattainment Pollutant Thresholds Requiring an Air Quality Impact Analysis 4-13
4C-8 Nonattainment Pollutant Offset Thresholds 4-13
4C-9 Nonattainment Review 4-14
4C-10 Federal Conformity Review 4-15
4C-11 Summary of Cancer and Non-Cancer Risk 4-17
4D-1 Special-Status Wildlife Species Known to be within 5 Miles of the Proposed Project Site 4-22
4D-2 Special-Status Plant Species Known to Occur within 5 Miles of the Proposed Project Site 4-26
4D-3 Sensitive Communities Known to Occur within 5 Miles of the Proposed Project Site 4-28
4K-1 Summary of Noise Monitoring Data at GSD Site 4-52

APPENDICES

A Air Quality
A1 Air Quality Study
A2 Health Risk Assessment
B Cultural and Paleotonological Resources: Results of Records Checks and Queries
C Noise Study
D Traffic Study
E Mitigation, Monitoring, & Reporting Program
F Public Comments on First Public Draft MND and Responses to Comments
G Public Comments on Second Public Draft MND and Responses to Comments

1.0 INTRODUCTION

In November 2004, the Goleta Sanitary District (GSD) and the Regional Water Quality Control Board (RWQCB) Central Coast Region entered into a settlement agreement whereby GSD agreed to upgrade its Goleta Wastewater Treatment Plant (WWTP) to full secondary treatment standards by November 2014. The proposed project is an upgrade of the liquids and solids system treatments and supplemental improvements to the GSD facility.

1.1 PURPOSE OF THE MITIGATED NEGATIVE DECLARATION

This Mitigated Negative Declaration has been prepared in accordance with the provisions of the California Environmental Quality Act (CEQA), as set forth in the California Public Resources Code, Sections 21000 to 21174. This document is intended to disclose to the public any environmental impacts that would occur as a result of the proposed project.

Because without mitigation the project would have impacts on biological resources, cultural resources, and transportation/circulation, mitigation measures have been included that would reduce these impacts to a less than significant level.

The lead agency for CEQA compliance is the GSD. Responsible agencies are:

- ~~Goleta West Sanitary District;~~
- ~~University of California at Santa Barbara;~~
- ~~Santa Barbara Municipal Airport; and~~
- **Central Coast Regional Water Quality Control Board;**
- **State Water Resources Control Board;**
- **U.S. Environmental Protection Agency;**
- **California Coastal Commission;**
- Santa Barbara County **Planning and Development Department; and**
- **Santa Barbara County Air Pollution Control District.**

1.2 PUBLIC PARTICIPATION

A Public Draft Mitigated Negative Declaration on the Proposed Project was released for public comment from June 30, 2008 to July 30, 2008 (State Clearinghouse [SCH] No. 2008061141). In addition, a public hearing was held on the Public Draft Mitigated Negative Declaration on July 7, 2008. No public comments were made on the project at the public hearing, however, comment letters were received on the project from the State Water Resources Control Board and Santa Barbara County Air Pollution Control District and are contained in Appendix F. A letter to GSD was also submitted by the Planning and Development Department of Santa Barbara County on February 28, 2009 and also contains comments on the Public Draft Mitigated Negative Declaration (see Appendix F also).

Due to changes in the project description, the need to incorporate the results of an additional archaeological investigation, Health Risk Assessment (HRA), and geohazards/geotechnical investigation, and the need to respond to public comments on the first Public Draft Mitigated Negative Declaration, the Mitigated Negative Declaration **was** ~~must be~~ **recirculated for public comment from July 31, 2009 to August 30, 2009. A public hearing was held on the second public draft Mitigated Negative Declaration on August 17, 2009**. Responses to public comments received on the first public draft are contained in Appendix F **and responses to public comments received on the second public draft are contained in Appendix G**. **Changes to the Mitigated Negative Declaration in response to public comments on the second public draft are shown in either bold underline (for additions) or strikeout (for deletions).**

2.0 PROJECT DESCRIPTION

2.1 PROJECT BACKGROUND AND OBJECTIVES

The GSD's WWTP was originally permitted and designed in 1985 to accommodate a design flow of 9 million gallons per day (MGD) measured in the dry weather period, typically in the months of June, July and August of the year. This dry weather value is the closest flow measurement that reflects the true service population of the community because it does not include any component attributed to groundwater or rain water intrusion into the sewer system. The average dry weather flow (ADWF) of 9 MGD was included in the Environmental Impact Report (EIR) document for the 1988 upgrade, dated May 1986. The facility was designed to operate under the Clean Water Act section 301(h) which permits the blending of primary and secondary treatment streams (also known as advanced primary or blended secondary) before disinfection and discharge into the Pacific Ocean. Under this mode of operation, all wastewater (100 percent) entering the plant receives primary treatment. About 40 percent of the total flow then receives secondary treatment to be subsequently mixed with the remaining 60 percent of the primary flow before discharge into the Pacific Ocean. The solids handling facilities and the final effluent discharge outfall into the ocean were designed to accommodate 9 MGD of dry weather flow.

In November 2004, GSD entered into a settlement agreement with the Central Coast RWQCB to upgrade the treatment process to provide secondary treatment to the full flow entering the facility rather than 40 percent of the flow under the current process by November 2014. This Proposed Project will not result in an increase in the capacity of the facility. The existing primary treatment facilities, the upgraded secondary treatment facilities under this project, the existing solids handling system and the final disposal system will all have the same existing overall plant capacity at 9 MGD measured as dry weather flow. ~~In November 2004, GSD and the Central Coast RWQCB entered into a settlement agreement whereby GSD agreed to upgrade the WWTP to reach full secondary treatment by November 2014. The WWTP upgrade project is designed to increase the treatment level of the wastewater but not to increase the flow capacity of the plant.~~

A *Facility Planning Study* was prepared by HDR, which summarized the recommended approach to upgrade the existing facilities in order to meet the anticipated National Pollutant Discharge Elimination System (NPDES) permit for secondary treatment (HDR 2008a). The *Facilities Planning Study* identified the most feasible liquids and solids treatment alternative to meet the provisions of the settlement agreement, and identified plant-wide improvements to support facilities, biosolids equipment, and space utilization (HDR 2008a). The *Facility Planning Study* (HDR 2008a) developed and evaluated ten liquid treatment alternatives and four solid handling alternatives to identify the best alternative based both on economic and non-economic factors. Each of the proposed alternatives needed to achieve four main objectives: comply with the settlement agreement between GSD and RWQCB, improve biosolids handling, maximize digester gas utilization, and meet GSD and member agency goals and objectives. In addition, the alternatives were developed using consistent common effluent quality parameters, flows and loads, conceptual design criteria and assumptions so that the alternatives can be equally and easily compared across categories. The alternatives assessment included applying economic and non-economic criteria to the various alternatives, scoring the alternatives based on their performance within these criteria, combining scores, and then weighting those scores to identify the most attractive alternative. The economic criteria included capital costs and operation and maintenance costs, while the non-economic criteria included technology related, regulation related, market related, and water reuse related criteria. Listed below are the alternatives that were evaluated in the *Facility Planning Study* (HDR 2008a).

Liquids Alternative Treatments	Solids Handling Alternative Treatments
Alternative 1 – Duplication of Existing Biofilter and Solids Contact Process	Alternative 1 - Base Alternative (Existing Process)
Alternative 2 – Biofilter followed by Activated Sludge	Alternative 2 - In-Vessel Composting
Alternative 2A - Redundant Biofilter and Activated Sludge	Alternative 3A - Dryer/Pelletizer for GSD Biosolids
Alternative 2B – Biofilter and Large Activated Sludge Tank	Alternative 3B - Dryer/Pelletizer for Regional Solids
Alternative 3 - Existing Biofilter/Solids Contact and Parallel Activated Sludge Train	
Alternative 4 - Existing Biofilter/Solids Contact and Parallel Membrane Bioreactor Train	
Alternative 5 - Activated Sludge Plant	
Alternative 6 - Parallel Biological Aerated Filter	
Alternative 7 - Microfiltration of Primary Effluent	
Alternative 8 - Wetlands for Secondary Treatment	

The results of the combined scoring and weighting revealed that liquid Alternative 2B (upgrade existing biofilter and large activated sludge tank) was the preferable liquids handling option because it meets the criteria and provides the aeration capability required if nitrification for ocean discharge becomes required in the future. Further analysis at the start of the design phase for the project revealed that the proposed roughing treatment step could be accomplished with two smaller biofilters instead of one large unit. The addition of a second biofilter is a viable option that increases the flexibility and reliability of the treatment process. This modified alternative is essentially the same as 2B as the two smaller biofilters will treat the same volume of wastewater as the one large filter.

The results of the combined scoring and weighting revealed that solids handling Alternative 1 (base alternative existing process) was the preferred solids handling option. Additionally, this alternative promotes a phased approach that will be flexible to uncertain biosolids regulation, biosolids disposal cost, environmental requirements and regional economics in the future.

This Mitigated Negative Declaration has been prepared based on the recommended project and plant wide improvements within the *Facilities Planning Study* (HDR 2008a), *Trickling Filter (Biofilter) Evaluation Technical Memorandum* (HDR 2008b), and Value Engineering Study (Black & Veatch 2009). Implementation of the recommended project would result in secondary treatment of the discharge from GSD to the Pacific Ocean with no increase in plant capacity.

2.2 LOCATION

The Goleta WWTP is located at One William Moffett Place, in an unincorporated coastal area of Santa Barbara County, California. The plant is located approximately 10 miles west of the City of Santa Barbara, near the Pacific Coast, as shown in Figures 2-1 and 2-2. Treated wastewater is discharged by a south-trending ocean outfall to the Pacific Ocean at a location more than one mile offshore of Goleta Beach County Park.

INITIAL STUDY/MITIGATED NEGATIVE DECLARATION FOR THE GOLETA SANITARY DISTRICT WASTEWATER TREATMENT PLANT UPGRADE PROJECT

AERIAL PHOTO 2008

Tetra Tech, Inc. Santa Barbara, CA
301 Mentor Drive, Suite A
Santa Barbara, CA 93111

TASK NO.	DATE	DRAWN BY	DWG NO.	FIGURE
18371–03	4/14/08	RANDALL	6734	2–2

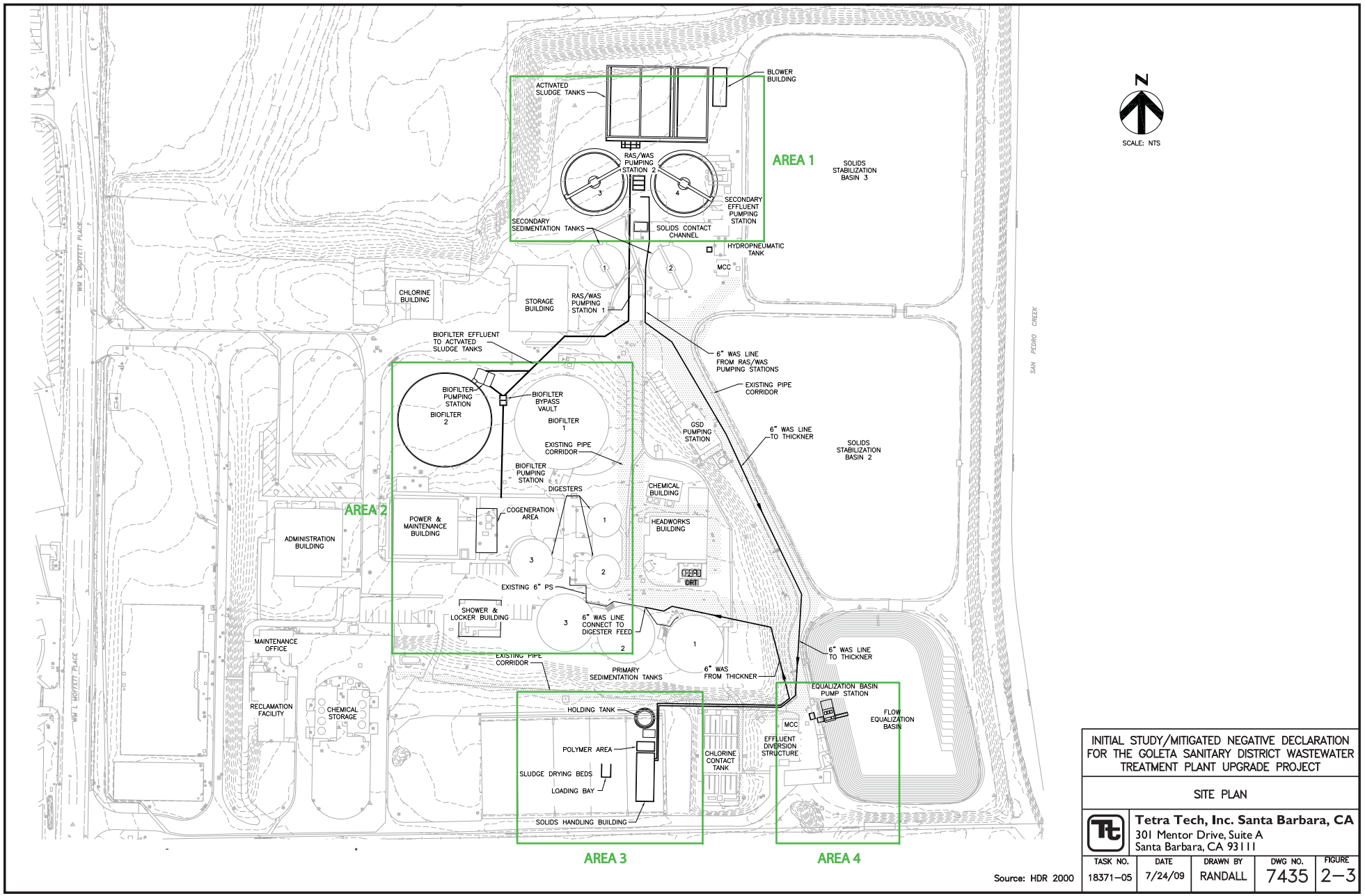

Source: HDR 2000

INITIAL STUDY/MITIGATED NEGATIVE DECLARATION FOR THE GOLETA SANITARY DISTRICT WASTEWATER TREATMENT PLANT UPGRADE PROJECT

SITE PLAN

Tetra Tech, Inc. Santa Barbara, CA
301 Mentor Drive, Suite A
Santa Barbara, CA 93111

TASK NO.	DATE	DRAWN BY	DWG NO.	FIGURE
18371–05	7/24/09	RANDALL	7435	2–3

The proposed project includes the demolition and upgrade of existing facilities and the addition of facilities in areas that are either paved or on land that has been previously disturbed. The estimated volume of excavated soil and soil used for backfill by the proposed project is shown in Table 2-2.

Table 2-2
Excavation and Backfill Amounts

	Excavation Amount (cy)	Backfill Amount (cy)
Liquids Upgrade	9,820	1,400
Solids Upgrade	8,600	5,300
Common Facilities	50	2,050
Piping, misc.	1,550	1,250
Total	**20,020**	**10,000**

The specific type of equipment used during construction would be determined by the selected General Contractor. Table 2-3 lists the heavy equipment that may be used during construction.

Table 2-3
Construction Equipment for the Basic Project and Supplemental Improvements

Equipment	Number	Details	Estimated Total Days of Use
Boom Trucks	2	12 or 14 Ton	200
Small Mobile Cranes	2	40 Ton	200
Large Crane	1	100 Ton	100
Sheep's Foot Compactor	1	1-20 Ton/1-35 Ton	45
Bull Dozer	1	D-4 / D-7	125
Small Vibrating Rollers	2	66 In.	90
Backhoes	2	9 Yd.	200
Track Excavators	4	2 – 250s / 2- 350s	125
Skip Loaders/Tractors	2	80 Hp.	200
Dump Trucks	4	10 Wheeler	90
Water Trucks	1	1-6 Wheel/1-10 Wheel	90
Cement Trucks	4		40
Cement Boom Pumps	2		90
Hand Compactors	2	Walkers, Flat Plates	100
Welding Rigs	4	2-Arc/2-Wire	200
Flat Bed Trucks	2	10 Ton	45
Skid Steer Loaders (Bobcat)	2	70 Hp.	200
Man Lifts	2	60 Ft. Boom	200
Large Fork Lifts	2	Extended Reach	200
Small Fork Lifts	2	Field	125
Pick Up Trucks	10		200
Miscellaneous Small. Gas Power. Pumps, Generators, and Tools	8		200
Gas Powered Chop Saws	6		200
Air Compressors	4	3,000 cfm	200
Asphalt Paving Machine	1	175 Hp.	60
Mow Strip Cement Machine	1	4 In.	7

Upon completion, the proposed project would add two full time staff to GSD.

2.5 CONSTRUCTION BEST MANAGEMENT PRACTICES

GSD will be incorporating all of the specific design recommendations that are contained in Appendix A of the *Geohazard Assessment/Soil Engineering Report* prepared by Tetra Tech for the Proposed Project and dated June 18, 2009 (Tetra Tech 2009a).

GSD's existing Storm Water Pollution Prevention Plan (SWPPP) would be updated to include an erosion and sediment control plan for construction of the Proposed Project which would include implementation of the following Best Management Practices (BMPs) designed to minimize erosion:

a. Methods such as geotextile fabrics, erosion control blankets, retention basins, drainage diversion structures, siltation basins and/or spot grading will be used to reduce erosion and siltation into adjacent water bodies or storm drains during grading and construction activities.

b. All entrances/exits to the construction site will be stabilized (e.g. using rumble plates, gravel beds or other best available technology) to reduce transport of sediment off site. Any sediment or other materials tracked off site will be removed the same day as they are tracked using dry cleaning methods.

c. Storm drain inlets will be protected from sediment-laden waters by the use of inlet protection devices such as gravel bag barriers, filter fabric fences, block and gravel filters, and excavated inlet sediment traps.

d. Construction staging and storage areas will be shown on the grading plans.

e. All exposed graded surfaces will be reseeded with ground cover vegetation to minimize erosion within four weeks of grading completion. This requirement will be noted on the building and grading plans.

f. Erosion and sediment control measures will be in place throughout grading and development of the site until all disturbed areas are permanently stabilized.

g. Construction materials and waste such as paint, mortar, concrete slurry, fuels, etc. will be stored, handled, and disposed of in a manner which minimizes the potential for storm water contamination. Bulk storage locations for construction materials and any measures proposed to contain the materials will be shown on the building and grading plans.

h. A copy of the SWPPP will be maintained on the project site during grading and construction activities.

3.0 EXISTING CONDITIONS

This section provides an overview of the existing conditions in the project area. Descriptions are presented for 16 resource areas: aesthetics; agricultural resources; air quality; biological resources; cultural resources; geology and soils; hazards and hazardous materials; hydrology and water quality; land use and planning; mineral resources; noise; population and housing; public services; recreation; transportation and traffic; and utilities and service systems. The information presented in this section is used as a basis for the impact analysis presented in Section 4.0.

3.1 AESTHETICS

The site is currently occupied by the existing GSD facility. It contains multiple buildings, paved areas, manicured lawn areas, retention basins, and wastewater treatment equipment.

3.2 AGRICULTURAL RESOURCES

The site does not contain any agricultural resources.

3.3 AIR QUALITY

3.3.1 Air Quality Setting

3.3.1.1 Regional Climate

The following discussion is taken from the Santa Barbara County Air Pollution Control District's (SBCAPCD's) 2007 Clean Air Plan (SBCAPCD 2007a).

Santa Barbara County's air quality is influenced by both local topography and meteorological conditions. Surface and upper-level wind flow varies both seasonally and geographically in the county and inversion conditions common to the area can affect the vertical mixing and dispersion of pollutants. The prevailing wind flow patterns in the county are not necessarily those that cause high ozone values. In fact, high ozone values are often associated with atypical wind flow patterns. Meteorological and topographical influences that are important to air quality in Santa Barbara County are as follows:

- Semi-permanent high pressure that lies off the Pacific Coast leads to limited rainfall (around 16 inches per year), with warm, dry summers and relatively damp winters. Maximum summer temperatures average about 70 degrees Fahrenheit (ºF) near the coast and in the high 80s to 90s inland. During winter, average minimum temperatures range from the 40s along the coast to the 30s inland. Additionally, cool, humid, marine air causes frequent fog and low clouds along the coast, generally during the night and morning hours in the late spring and early summer. The fog and low clouds can persist for several days until broken up by a change in the weather pattern.

- In the northern portion of the county (north of the ridgeline of the Santa Ynez Mountains), the sea breeze (from sea to land) is typically northwesterly throughout the year while the prevailing sea breeze in the southern portion of the county is from the southwest. During summer, these winds are stronger and persist later into the night. At night, the sea breeze weakens and is replaced by light land breezes (from land to sea). The alternation of the land-sea breeze cycle can sometimes produce a "sloshing" effect, where pollutants are swept offshore at night and subsequently carried

back onshore during the day. This effect is exacerbated during periods when wind speeds are low.

- The terrain around Point Conception, combined with the change in orientation of the coastline from north-south to east-west can cause counterclockwise circulation (eddies) to form east of the Point. These eddies fluctuate temporally and spatially, often leading to highly variable winds along the southern coastal strip. Point Conception also marks the change in the prevailing surface winds from northwesterly to southwesterly.

- Santa Ana winds are northeasterly winds that occur primarily during fall and winter, but occasionally in spring. These are warm, dry winds that blow from the high inland desert and descend down the slopes of a mountain range. Wind speeds associated with Santa Ana winds are generally 15 to 20 miles per hour (mph), though they can sometimes reach speeds in excess of 60 mph. During Santa Ana conditions, pollutants emitted in Santa Barbara, Ventura County, and the South Coast Air Basin (the Los Angeles region) are moved out to sea. These pollutants can then be moved back onshore into Santa Barbara County in what is called a "post-Santa Ana condition." The effects of the post-Santa Ana condition can be experienced throughout the county. Not all post-Santa Ana conditions, however, lead to high pollutant concentrations in Santa Barbara County.

- Upper-level winds (measured at Vandenberg Air Force Base once each morning and afternoon) are generally from the north or northwest throughout the year, but occurrences of southerly and easterly winds do occur in winter, especially during the morning. Upper-level winds from the south and east are infrequent during the summer. When they do occur during summer, they are usually associated with periods of high ozone levels. Surface and upper-level winds can move pollutants that originate in other areas into the county.

- Surface temperature inversions (0-500 feet) are most frequent during the winter, and subsidence inversions (1000-2000 feet) are most frequent during the summer. Inversions are an increase in temperature with elevation and are directly related to atmospheric stability. Inversions act as a cap to the pollutants that are emitted below or within them and ozone concentrations are often higher directly below the base of elevated inversions than they are at the earth's surface. For this reason, elevated monitoring sites will occasionally record higher ozone concentrations than sites at lower elevations. Generally, the lower the inversion base height and the greater the rate of temperature increase from the base to the top, the more pronounced effect the inversion will have on inhibiting vertical dispersion. The subsidence inversion is very common during summer along the California coast, and is one of the principal causes of air stagnation.

- Poor air quality is usually associated with "air stagnation" (high stability/restricted air movement). Therefore, it is reasonable to expect a higher frequency of pollution events in the southern portion of the county where light winds are frequently observed, as opposed to the northern part of the county where the prevailing winds are usually strong and persistent.

3.3.1.2 Local Climate

Climate data from the Santa Barbara Airport, the closest climate monitoring station, indicate average daily highs ranging from 64° F to 75° F and average daily lows ranging from 40° F to 57° F. Average annual rainfall is approximately 16 inches with the majority falling October through April. A summary of climate data from the Santa Barbara Municipal Airport is presented in Table 3-1.

Table 3-1
Climate Data, Santa Barbara Airport

Month	Average Maximum Temperature (^{0}F)	Average Minimum Temperature (^{0}F)	Average Total Precipitation (in.)
January	63.9	40.0	3.41
February	64.5	42.8	3.37
March	65.4	44.9	2.98
April	67.4	47.3	1.18
May	69.1	50.2	0.30
June	71.5	53.4	0.04
July	74.0	56.8	0.03
August	75.0	57.3	0.06
September	75.0	55.6	0.24
October	72.6	50.7	0.48
November	69.3	44.1	1.71
December	64.9	40.2	2.42
Annual	69.4	48.6	16.23

Note: Period of Record: 1/1/1914 to 6/30/2007
Source: Western Region Climate Center (http://www.wrcc.dri.edu.)

3.3.1.3 Existing Air Quality

The SBCAPCD maintains a network of 17 air quality monitoring stations across the county. The most recent three years of air quality data for the closest station to the Proposed Project, the Goleta Station, is shown on Table 3-2. The Goleta Station does not monitor for particulates. Data for particulate matter less than 10 micrometers (PM_{10}) are from the El Capitan Station and particulate matter less than 2.5 micrometers ($PM_{2.5}$) data are from the Santa Barbara Station, the closest stations monitoring those pollutants.

Table 3-2
Air Quality Data Goleta Monitoring Station

Pollutant/Standard	2004	2005	2006
Ozone (1-hour)			
Maximum Concentration (ppm)	0.092	0.080	0.083
Days> CAAQS (0.09 ppm)	0	0	0
Days> NAAQS l (0.12 ppm)	0	0	0
Ozone (8-hour)			
Maximum Concentration (ppm)	0.087	0.066	0.069
Days > NAAQS (0.08) ppm)	1	0	0
PM_{10} (24-hour)[1]			
Maximum State Concentration ($\mu g/m^3$)	51.3	40.7	39.9
Maximum National Concentration ($\mu g/m^3$)	50.9	40.0	39.0
Days > CAAQS (50 $\mu g/m^3$)	6.1	0	0
Days > NAAQS (150 $\mu g/m^3$)	0	0	0
$PM_{2.5}$ (24-hour)[2]			
Maximum Concentration ($\mu g/m^3$)	27.5	28.3	27.9
Days > NAAQS (65 $\mu g/m^3$)	ND	ND	0
CO (8-hour)			
Maximum Concentration (ppm)	0.95	0.83	0.80
Days > CAAQS (9.0 ppm)	0	0	0
Days > NAAQS (9 ppm)	0	0	0
NO_2 (1-hour)			
Maximum Concentration (ppm)	0.043	0.044	0.039
Days > CAAQS (0.25 ppm)	0	0	0
SO_2 (24-hour)			
Maximum Concentration (ppm)	.001	.001	.003
Days > CAAQS (0.04 ppm)	0	0	0
Days > NAAQS (0.14 ppm)	0	0	0

Source: http://www.arb.ca.gov/adam/welcome.html
[1] Data from El Capitan Monitoring Station
[2] Data from Santa Barbara Monitoring Station

Definitions:
CAAQS—California Air Quality Standards
NAAQS—National Ambient Air Quality Standards
PM_{10}—particulate matter less than 10 micrometers
$PM_{2.5}$—particulate matter less than 2.5 micrometers
CO—carbon monoxide
NO_2—nitrogen dioxide
SO_2—sulphur dioxide
ppm—parts per million
$\mu g/m^3$—micrograms per cubic meter
$\mu g/m$—micrograms per meter
ND—Not detected

3.3.2 Regulatory Setting

3.3.2.1 Federal and State Clean Air Acts

The Federal Clean Air Act (CAA) was passed in 1963 by the U.S. Congress and has been amended several times. The Federal CAA of 1970 forms the basis for the national air pollution control effort. Basic elements of the CAA include provisions for attainment and maintenance of the National Ambient Air Quality Standards (NAAQS) for major air pollutants (Title I), motor vehicle emissions and fuel standards (Title II), hazardous air pollutant standards (Title III), and stratospheric ozone protection (Title VI). The 1970 CAA Amendments strengthened previous legislation and laid the foundation for the regulatory scheme of the 1970s and 1980s. In 1977, Congress again added several provisions, including non-attainment requirements for areas not meeting NAAQS and the Prevention of Significant Deterioration (PSD) Program which regulates stationary sources. The amendments identified specific emission reduction goals, required both a demonstration of reasonable further progress and attainment by specified dates, and incorporated more stringent sanctions for failure to attain the NAAQS or to meet interim attainment milestones. The 1990 Amendments represent the latest in a series of Federal efforts to regulate the protection of air quality in the U.S. The current NAAQS are listed in Table 3-3. As indicated, the averaging times for the various air quality standards (the duration over which they are measured) range from one-hour to an annual basis. The standards are read as a concentration, in parts per million (ppm), or as a weighted mass of material per a volume of air, in milligrams or micrograms of pollutant per cubic meter of air (mg/m^3 and $\mu g/m^3$, respectively).

In 1988, the State Legislature passed the California Clean Air Act (CCAA), which established California's air quality goals, planning mechanisms, regulatory strategies, and standards of progress for the first time. The CCAA provides the State with a comprehensive framework for air quality planning regulation. The CCAA requires attainment of State ambient air quality standards (CAAQS) by the earliest practicable date. Attainment Plans are required for air basins in violation of the State ozone (O_3), carbon monoxide (CO), sulfur dioxide (SO_2), or nitrogen dioxide (NO_2) standards. Preparation of and adherence to Attainment Plans are the responsibility of the local air pollution districts or air quality management districts. The CAAQS are more stringent than the corresponding Federal standards. The CAAQS are also summarized in Table 3-3.

Table 3-3
Ambient Air Quality
Standards

Ambient Air Quality Standards						
Pollutant	Averaging Time	California Standards [1]		Federal Standards [2]		
		Concentration [3]	Method [4]	Primary [3,5]	Secondary [3,6]	Method [7]
Ozone (O_3)	1 Hour	0.09 ppm (180 µg/m^3)	Ultraviolet Photometry	—	Same as Primary Standard	Ultraviolet Photometry
	8 Hour	0.070 ppm (137 µg/m^3)		0.075 ppm (147 µg/m^3)		
Respirable Particulate Matter (PM10)	24 Hour	50 µg/m^3	Gravimetric or Beta Attenuation	150 µg/m^3	Same as Primary Standard	Inertial Separation and Gravimetric Analysis
	Annual Arithmetic Mean	20 µg/m^3		—		
Fine Particulate Matter (PM2.5)	24 Hour	No Separate State Standard		35 µg/m^3	Same as Primary Standard	Inertial Separation and Gravimetric Analysis
	Annual Arithmetic Mean	12 µg/m^3	Gravimetric or Beta Attenuation	15.0 µg/m^3		
Carbon Monoxide (CO)	8 Hour	9.0 ppm (10mg/m^3)	Non-Dispersive Infrared Photometry (NDIR)	9 ppm (10 mg/m^3)	None	Non-Dispersive Infrared Photometry (NDIR)
	1 Hour	20 ppm (23 mg/m^3)		35 ppm (40 mg/m^3)		
	8 Hour (Lake Tahoe)	6 ppm (7 mg/m^3)		—	—	—
Nitrogen Dioxide (NO_2)	Annual Arithmetic Mean	0.030 ppm (57 µg/m3)	Gas Phase Chemiluminescence	0.053 ppm (100 µg/m^3)	Same as Primary Standard	Gas Phase Chemiluminescence
	1 Hour	0.18 ppm (339 µg/m^3)		—		
Sulfur Dioxide (SO_2)	Annual Arithmetic Mean	—	Ultraviolet Fluorescence	0.030 ppm (80 µg/m^3)	—	Spectrophotometry (Pararosaniline Method)
	24 Hour	0.04 ppm (105 µg/m^3)		0.14 ppm (365 µg/m^3)	—	
	3 Hour	—		—	0.5 ppm (1300 µg/m^3)	
	1 Hour	0.25 ppm (655 µg/m^3)		—	—	—
Lead[8]	30 Day Average	1.5 µg/m^3	Atomic Absorption	—	—	—
	Calendar Quarter	—		1.5 µg/m^3	Same as Primary Standard	High Volume Sampler and Atomic Absorption
	Rolling 3-Month Average[9]	—		0.15 µg/m^3		
Visibility Reducing Particles	8 Hour	Extinction coefficient of 0.23 per kilometer — visibility of ten miles or more (0.07 — 30 miles or more for Lake Tahoe) due to particles when relative humidity is less than 70 percent, Method: Beta Attenuation and Transmittance through Filter Tape.		No Federal Standards		
Sulfates	24 Hour	25 µg/m^3	Ion Chromatography			
Hydrogen Sulfide	1 Hour	0.03 ppm (42 µg/m^3)	Ultraviolet Fluorescence			
Vinyl Chloride[8]	24 Hour	0.01 ppm (26 µg/m^3)	Gas Chromatography			
See footnotes on next page …						

For more information please call ARB-PIO at (916) 322-2990 California Air Resources Board (11/17/08)

Table 3-3 (continued)
Ambient Air Quality Standards

1. California standards for ozone, carbon monoxide (except Lake Tahoe), sulfur dioxide (1 and 24 hour), nitrogen dioxide, suspended particulate matter—PM10, PM2.5, and visibility reducing particles, are values that are not to be exceeded. All others are not to be equaled or exceeded. California ambient air quality standards are listed in the Table of Standards in Section 70200 of Title 17 of the California Code of Regulations.

2. National standards (other than ozone, particulate matter, and those based on annual averages or annual arithmetic mean) are not to be exceeded more than once a year. The ozone standard is attained when the fourth highest eight hour concentration in a year, averaged over three years, is equal to or less than the standard. For PM10, the 24 hour standard is attained when the expected number of days per calender year with a 24-hour average concentration above 150 $\mu g/m^3$ is equal to or less than one. For PM2.5, the 24 hour standard is attained when 98 percent of the daily concentrations, averaged over three years, are equal to or less than the standard. Contact U.S. EPA for further clarification and current federal policies.

3. Concentration expressed first in units in which it was promulgated. Equivalent units given in parentheses are based upon a reference temperature of 25°C and a reference pressure of 760 torr. Most measurements of air quality are to be corrected to a reference temperature of 25°C and a reference pressure of 760 torr; ppm in this table refers to ppm by volume, or micromoles of pollutant per mole of gas.

4. Any equivalent procedure which can be shown to the satisfaction of the ARB to give equivalent results at or near the level of the air quality standard may be used.

5. National Primary Standards: The levels of air quality necessary, with an adequate margin of safety to protect the public health.

6. National Secondary Standards: The levels of air quality necessary to protect the public welfare from any known or anticipated adverse effects of a pollutant.

7. Reference method as described by the EPA. An "equivalent method" of measurement may be used but must have a "consistent relationship to the reference method" and must be approved by the EPA.

8. The ARB has identified lead and vinyl chloride as 'toxic air contaminants' with no threshold level of exposure for adverse health effects determined. These actions allow for the implementation of control measures at levels below the ambient concentrations specified for these pollutants.

9. National lead standard, rolling 3-month average: final rule signed October 15, 2008.

For more information please call ARB-PIO at (916) 322-2990 **California Air Resources Board (11/17/08)**

3.3.2.2 Attainment Status

The attainment status for Federal and State air quality standards in Santa Barbara County is provided in Table 3-4.

Table 3-4
Attainment Status

	Santa Barbara County Attainment Status	
Pollutants	**Federal[a]**	**State[b]**
1-Hour Ozone	-[c]	A
8-Hour Ozone	A	N
PM_{10}	U	N
$PM_{2.5}$	U	U
CO	A	A
NO_2	A	A
SO_2	A	A

A = Attainment
N = Nonattainment
U = Unclassified (treated as attainment)
a. See 40 Code of Federal Regulations (CFR) Part 81
b See California Code of Regulations (CCR) Title 17 Sections 60200-60210
c Effective June 15, 2005, the U.S. Environmental Protection Agency revoked in the Federal 1-hour ozone standard, including associated designations and classifications.

3.3.2.3 Santa Barbara Clean Air Plan (CAP)

To ensure continued progress toward clean air and compliance with State and Federal requirements, the SBCAPCD, in conjunction with the California Air Resources Board (CARB), the Santa Barbara Association of Governments (SBCAG), and the United States Environmental Protection Agency (U.S. EPA) prepared the 2007 Clean Air Plan (2007 CAP).

The 2007 CAP addresses several Federal planning requirements and incorporates significant new scientific data, primarily in the form of updated emissions inventories, ambient measurements, new meteorological episodes, and new air quality modeling tools. The 2007 CAP determines the level of compliance required to maintain the Federal 8-hour ozone standard and attain the State 1-hour ozone standard. The document highlights the strategies to reduce ozone and its precursors, especially in the area of mobile sources, to meet all Federal criteria pollutant standards within the timeframes allowed under the Federal Clean Air Act and to facilitate the transition from the Federal 1-hour ozone standard to the new 8-hour ozone standard. U.S. EPA established planning requirements for areas such as Santa Barbara County which: (1) had attained the Federal 1-hour ozone standard by June 15, 2004, (2) were subject to a maintenance plan for the Federal 1-hour ozone standard, and (3) are classified as attainment for the Federal 8-hour ozone standard. These requirements provide “anti-backsliding” provisions specifying which of the Federal 1-hour ozone obligations would continue to apply and required submission of a 10-

year maintenance plan for the 8-hour Federal ozone standard under Section 110(a)(1) of the Federal Clean Air Act Amendments.

The 2007 CAP employs the most up-to-date scientific and analytical tools, and incorporates a comprehensive strategy aimed at controlling pollution from all sources, including stationary sources, on-road and off-road mobile sources, and area sources. The 2007 CAP proposes demonstration of attainment for the Federal $PM_{2.5}$ standards through a more focused control of sulfur oxides (SO_x), directly-emitted $PM_{2.5}$, and NO_x, supplemented with control of volatile organic compounds (VOCs) by 2015. The 8-hour ozone control strategy builds upon the $PM_{2.5}$ strategy, augmented with additional NO_x and VOC reductions to meet the standard by 2024.

3.3.2.4 Prevention of Significant Deterioration (PSD) Program

The U.S. Environmental Protection Agency (USEPA) implements the Prevention of Significant Deterioration (PSD) Program. The purpose of the PSD Program is to provide for the review of new and modified stationary sources of air pollution. PSD Program requirements apply to all new stationary sources and all modifications to existing stationary sources which would emit or may emit any attainment pollutants. The PSD Program applies to major stationary sources with annual emissions exceeding either 100 or 250 tons per year depending on the source, or that cause or contribute adverse impacts to any Federally classified Class I area.

The SBCAPCD adopted a series of Rules and Regulations to address PSD which include a series of New Source Review Rules to ensure compliance and protection of Class I Areas. In summary, Best Available Control Technology must be applied to a new stationary source or modification of an existing source, for any net emissions increases of any attainment pollutant which is equal to or greater than any emission level shown in SBCAPCD Rule 803, *Prevention Of Significant Deterioration*. Best Available Control Technology shall be implemented to reduce emissions for each pollutant to the maximum extent through modifications to production processes or available methods, systems, or techniques but while taking into account energy demand, costs, and environmental and economic impacts. These may include fuel cleaning or treatment techniques or innovative fuel combustion techniques for control of such pollutants.

3.3.2.5 General Air Conformity

Section 176(c)(1) of the CAA requires Federal agencies to assure that their actions conform to applicable implementation plans for achieving and maintaining the NAAQS for criteria pollutants. Specifically, for there to be conformity, a Federal action must not contribute to new violations of standards for ambient air quality, increase the frequency or severity of existing violations, or delay timely attainment of standards in the area of concern (e.g., a State or a smaller air quality region). SBCAPCD has adopted the General Conformity requirements in Rule 702. Rule 702 mirrors the Federal general conformity requirements with the exception of Section 51.860, Mitigation Measures.

Air Conformity requirements only apply to activities taking place in a Federal nonattainment area and for those pollutants for which the area is in nonattainment. If an area is in attainment for a standard, since the standard was promulgated, the area is not subject to conformity review unless it becomes in nonattainment. If an area has been in nonattainment anytime after the promulgation of a standard, it is subject to conformity review even if it comes into attainment at some later time.

3.3.2.6 Global Climate Change and Greenhouse Gases (GHGs)

Assembly Bill 32 (AB 32) requires that California's greenhouse gas (GHG) emissions be reduced to 1990 levels by 2020. The reduction would be accomplished through an enforceable Statewide cap on global warming emissions to be phased in beginning 2012. AB 32 directs the CARB to develop regulations and a mandatory reporting system to track and monitor global warming emissions levels (AB 32, Chapter 488, Statutes of 2006).

The California Air Pollution Control Officers Association (CAPCOA) has released a resource guide to address GHG emissions from projects subject to CEQA. This resource guide has been prepared to support local governments as they develop their programs and policies around climate change issues. It is not a guidance document. It is not intended to dictate or direct how any agency chooses to address GHG emissions. Rather, it is intended to provide a common platform of information about key elements of CEQA as they pertain to GHG, including an analysis of different approaches to setting significance thresholds. The resource guide also contains an organized review of available tools and models for evaluating GHG emissions, and an overview of strategies for mitigating potentially significant GHG emissions from projects. As the CARB and other State agencies and offices develop policies and regulations to address GHG emissions, the interface between CEQA and these other programs may change.

3.4 BIOLOGICAL RESOURCES

The Proposed Project site is currently developed with paved areas, buildings, and concrete structures. No natural habitats remain on the project site (Tetra Tech 2008). No sensitive species or sensitive natural communities are known to occur at GSD.

Due to the highly developed nature of the site, the site is not likely to be used as a wildlife corridor. The proposed project site is not included in any State, regional or local habitat conservation plan.

The close proximity of GSD to the Goleta Slough, Pacific Ocean, and Lake Los Carneros attracts a wide variety of bird species. Wetlands also occur adjacent to the proposed project, to the north of the GSD facility. The solids stabilization basins provide a low quality aquatic habitat for these birds.

3.5 CULTURAL RESOURCES

The ethnohistoric Chumash village of *Helo'*, termed Mescalitan Island by Spanish explorers, occupied the landform on which the GSD WWTP facility is located. Early Spanish explorers described this village as supporting a population of 800 people and 100 to 200 houses, respectively, though the population is estimated at 250 to 300 persons in ethnohistorical studies (Dudek, 2009).

Archaeological investigations have occurred at *Helo'* since the late 19th century, though systematic works were initiated by David Banks Rogers. Rogers identified the site as CA-SBA-46 in the 1920s, though he did not excavate there. Subsequent excavations by Ronald Olson, Richard Van Valkenburgh, and Phil Orr carried out extensive work on the island. Orr characterized three main concentrations of habitation on the island, Site I, II, and III. Ethnohistoric period glass trade beads were identified in Sites I and III, in what Orr considered cemeteries (Dudek 2009).

Substantial disturbances to *Helo'* began in 1941 with construction of the Marine Station Goleta airstrip which resulted in removal of the western half of Mescalitan Island (Dudek 2009). Additional disturbances occurred in 1943 and 1944, when the southern edge of the island was removed to add fill for an additional airfield landing strip. Sand quarry operations on the remaining island area were initiated by 1944. Grading of the southern part of the island by Pacific Lighting Gas Supply Corporation was associated with the development of subsurface natural gas storage facilities.

Between 1950 and 1954, the first GSD WWTP facilities were constructed within the northeastern area of Mescalitan Island termed "Site III" by archaeologist Phil Orr. Construction associated with Ward Memorial Boulevard in 1961 resulted in additional grading of the island landform, this time removing a wide swath between the northeasterly Site III portion, and the southern bluff containing the Pacific Lighting Gas Supply Corporations facility. Expansion of the WWTP facilities throughout the 1960s further encroached within the CA-SBA-46 Site III area (SRS 1985a-e). Today, the original landform of CA-SBA-46 is located within a subset of the area occupied by the GSD WWTP. Proposed project elements within Area 2 of the proposed project (see Figure 2-3) and new pipelines proposed between Areas 1, 2, and 3 of the proposed project (Figure 2-3) lie within CA-SBA-46.

When the southern edge of Mescalitan Island was removed to provide for an additional airfield landing strip, fill material activity in 1943 and 1944, Phil Orr was allowed to conduct archaeological investigations in the northeastern, Site III area of the island as well as monitor grading of the southern part of the island by Pacific Lighting Gas Supply Corporation associated with the development of subsurface nature gas storage facilities. Archaeological excavations during the 1960s, when the GSD WWTP was being constructed, were focused on the southerly Site I (Dudek 2009).

A facility-wide Phase 2 significance assessment archaeological investigation was undertaken at the GSD WWTP by SRS in 1985 in association with expansion of the WWTP facilities. The 1985 SRS excavations were designed to evaluate integrity and variability of remaining cultural deposits within CA-SBA-46. In addition, Phase 3 Data Recovery mitigation excavations were conducted by the University of California Santa Barbara (Gamble 1990). The 1985 Phase 2 excavations identified substantial variability in the variety and density of cultural remains within the remaining CA-SBA-46 area. The high density cultural materials included shellfish, animal bones, stone tool waste flake debitage, and stone tools. Potential occupation of the Early Period (9,200 before present [BP]), Middle Period (2600 to 2000 BP) and Late Period (750 to 200 BP) was noted in the Phase 2 investigation based on radiocarbon dates and beads. No human remains were found during the Phase 2 investigation. The Phase 3 investigation encountered two superimposed house floors and evidence of hearth areas (Dudek 2009).

3.6 GEOLOGY AND SOILS

3.6.1 Regional Geologic Setting

The project site is located in the Goleta basin of the coastal plain of southern Santa Barbara County, California. The Goleta basin is on the northern edge of the Ventura Basin of the western Transverse Ranges Geomorphic Province of California. The geologic structure of the Goleta basin is a southward continuation of the Santa Ynez Mountains structural block of the northern Ventura Basin. The Santa Ynez Mountains were uplifted to an average elevation of 3,500 feet during the Quaternary Period. In general, the Santa Ynez Range is a south dipping homocline uplifted along the Santa Ynez Fault with the crest essentially forming a strike ridge. The structural geology in the Santa Barbara and Goleta area is a continuation of the south-dipping homocline of the Santa Ynez Range beneath the adjacent coastal plain

cut by a series of subparallel east-west trending faults and folds that are the result of the north-south compressional tectonics that formed the Western Transverse Ranges (Dibblee 1966).

3.6.2 Local Geologic Setting

The geology of the project area as depicted on *Geologic Map of the Goleta Quadrangle, Santa Barbara County, California* (Minor *et. al* 2007) is shown on Figure 3-1a (with an explanation for this map shown on Figure 3-1b). The stratigraphy of the project area is described in the map legend as follows:

The oldest stratigraphic units consist of Eocene resistant, southward-dipping, mostly marine sedimentary rocks along the south flank of the Santa Ynez Mountains uplift, which form a backdrop of prominent hogbacks and cuestas above Goleta Valley. Less resistant but similarly deformed, Oligocene through Pliocene terrestrial and marine sedimentary rocks are exposed in the lower Santa Ynez foothills on the north margin of the valley and in the coastal hills and sea cliffs to the south. Moderately faulted and folded or warped Pleistocene marine and terrestrial sediments underlie the hills and mesas on the north and southeast sides of Goleta Valley. Uplifted and locally warped upper Pleistocene marine-terrace deposits and underlying wave-cut platforms that underlie the coastal mesas are displaced by the large east-northeast-trending More Ranch Fault system that spans the map area. Undisturbed Holocene alluvial and colluvial deposits directly underlie most of the low-lying parts of Goleta Valley and are locally present along stream canyons dissecting the lower flanks of the Santa Ynez Mountains.

3.6.3 Earth Materials

To evaluate subsurface conditions at the proposed structure locations for the Proposed Project, a geotechnical study was conducted by Tetra Tech and Earth Systems Pacific (ESP). Tetra Tech and ESP completed ten hollow stem auger (HSA) borings and five cone penetrometer (CPT) soundings at the project site (Figure 3-2) and the results are contained in the *Geohazard Assessment/Soil Engineering Report, Goleta Sanitary District Wastewater Treatment Plant Upgrade* (Geohazard Assessment/**Soil Engineering Report** ~~Geotechnical Investigation~~) (Tetra Tech 2009a).

In Area 1 of the Proposed Project (Figure 2-3), the HSA borings and CPT soundings indicated a subsurface profile consisting of a layer of fill extending approximately 15 to 16 feet below ground surface (bgs) underlain by 10 to 12 feet of Holocene alluvial (estuarine) soils (interpreted by Tetra Tech as the Holocene estuarine deposits of Minor *et. al* 2007) over a siltstone bedrock (interpreted by Tetra Tech as the Pleistocene to upper Pliocene siltstone of Minor *et. al* 2007). Borings 3 and 5 were terminated at 31.5 feet bgs and 38.5 feet bgs due to hydrostatic pressured caused by flowing sand. Groundwater was encountered near the alluvium-siltstone contact at depths ranging from 20 to 27 feet bgs. The groundwater bearing zone appeared to occur to depths approximately 10 to 12 feet below the top of the siltstone in a more weathered zone.

In Area 2 of the Proposed Project site, the subsurface profile contained a layer of fill extending to approximately to 7.5 feet bgs in boring 8 and 6.5 feet bgs in boring 9. The fill was underlain by Holocene dune sand consisting of light brown, moist, dense, poorly graded sand extending from to 7.5 to 11 feet bgs in boring 8 and 6.5 to 14 feet bgs in boring 9. The dune sands are interpreted by Tetra Tech as the Holocene dune sands described by Scientific Resource Surveys, Inc. (SRS) (SRS 1985) as described in Section 3.6.4 below. The dune sand was underlain by the fossilferous, gray to gray-orange, moist, soft, very weathered siltstone bedrock (interpreted by Tetra Tech as the unnamed lower Pleistocene to upper Pliocene siltstone of Minor *et. al* 2007) from 11 to 24 feet bgs in boring 8 and 14 to 20 feet bgs in boring

9. The weathered siltstone transitions to unweathered blue gray, soft, siltstone bedrock below 8 and 14 feet bgs in borings 8 and 9. No groundwater was encountered in borings 8 and 9 (to a total depth of 51.5 feet bgs in boring 9).

In Area 3 of the Proposed Project site, the subsurface profile contained a layer of fill extending 5.5 to 6.5 feet bgs. In boring 6, the fill consisted of dense clayey sand which was underlain by 8.5 feet of alluvium consisting of dense, poorly graded sand over the unnamed siltstone bedrock. In boring 7, the fill consisted of dense, poorly graded sand that was directly underlain by the unnamed siltstone bedrock. No groundwater was encountered in boring 6 (to a total depth of 51.5 feet bgs). In boring 7, a minor zone of perched groundwater was encountered on top of the siltstone between 5.0 and 5.5 feet bgs.

One CPT sounding (sounding 5) and HSA boring 10 were completed in Area 4 of the Proposed Project site. In boring 10, asphaltic concrete was encountered at the surface and underlain by a layer of fill extending to approximately to 8.5 feet bgs. The fill was underlain by alluvium extending from to 8.5 to 11 feet bgs. The alluvium was underlain by fossilferous claystone bedrock (which may be the upper portion of the unnamed siltstone) from 11 to 15 feet bgs. The unnamed blue gray siltstone bedrock was encountered beneath the very weathered unnamed claystone to total depth at 26.5 feet bgs. No groundwater was encountered.

Based on review of the log for CPT sounding 5, the subsurface profile in Area 4 contained a layer of fill extending to approximately 10 feet bgs. The fill appeared to be underlain by the unnamed siltstone at approximately 10 feet bgs. The actual top of groundwater could not be directly determined from the CPT data, but it is inferred to have not been present based on information from the log for HSA boring 5.

3.6.4 Soil Stratigraphy

A detailed investigation of the soil stratigraphy of the portion of the Proposed Project site located on the northeast area of Mescalitan Island was performed by SRS in 1985 as part of an archaeological investigation (SRS 1985a-e). SRS reported that the northeast area of Mescalitan Island consists of unconsolidated to slightly indurated sands representing a transverse-like coastal dune of wind blown sand transported inshore from Goleta Beach and deposited in the lee of the elevated southern portion of the island. These deposits conformably overlie fine-grained deposits interpreted by SRS as estuary-derived lagoonal clays. The report quotes Thomas Rockwell, who suggested that the dune is Holocene in age with the silts and clays representing a higher sea level ca. 6,000 years before present (B.P.). The dune has a crest that parallels the More Ranch fault scarp across the southern portion of the island in an east-west direction. The windward side of the dune is relatively steep down to the base of the fault scarp which divides the island. The lee side of the dune has a shallow slope down to the slough edge on the north (SRS 1985a-e).

Based on an examination of the fine grained materials underlying the dune sand deposits in soil samples from exploratory trenches excavated for a fault investigation for the Proposed Project (see Section 3.6.7 below), it is Tetra Tech's opinion that the estuary-derived lagoonal clays described by SRS are the Pleistocene to upper Pliocene siltstone of Minor *et. al* 2007.

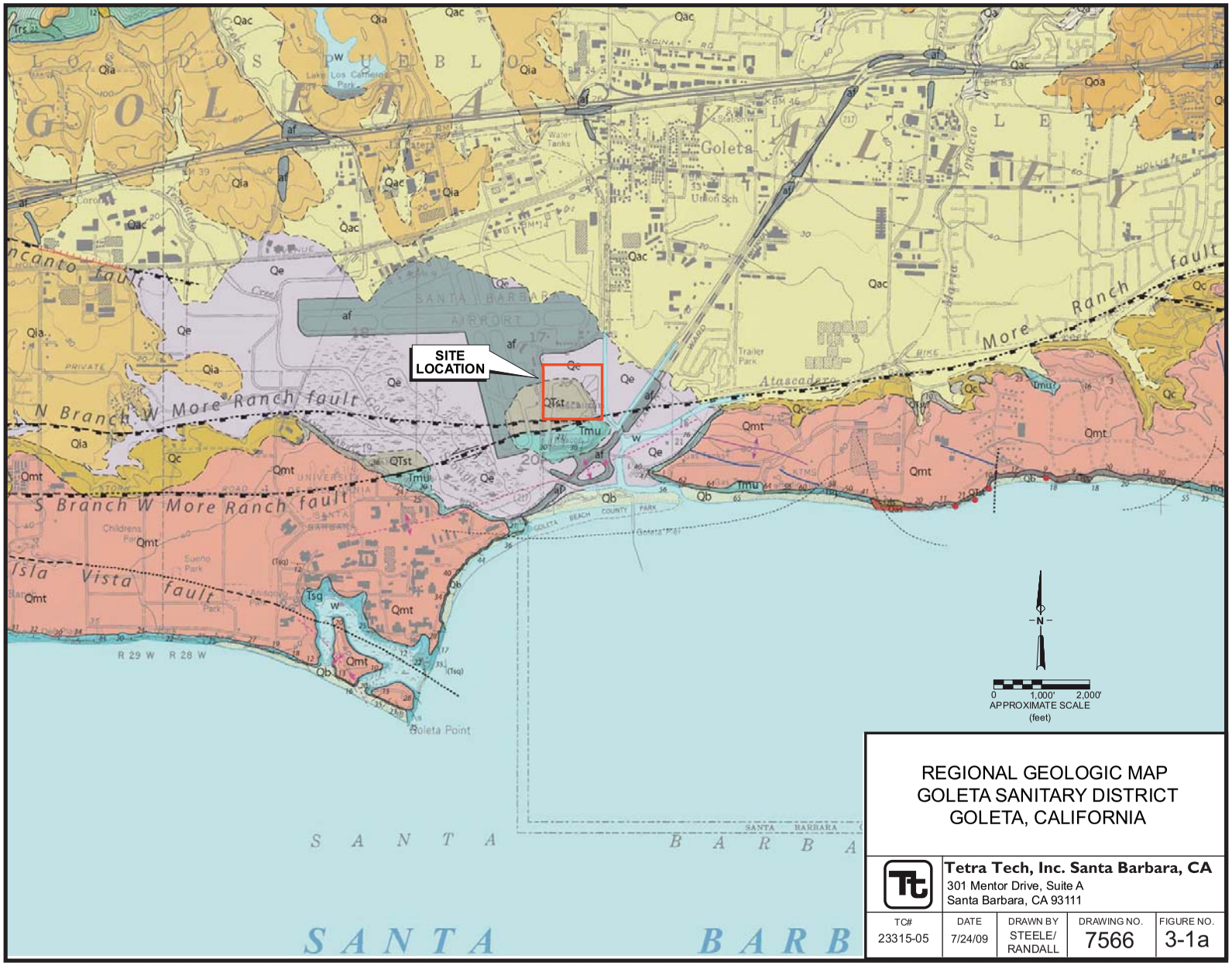

REGIONAL GEOLOGIC MAP
GOLETA SANITARY DISTRICT
GOLETA, CALIFORNIA

Tetra Tech, Inc. Santa Barbara, CA
301 Mentor Drive, Suite A
Santa Barbara, CA 93111

TC#	DATE	DRAWN BY	DRAWING NO.	FIGURE NO.
23315-05	7/24/09	STEELE/ RANDALL	7566	3-1a

NOTES: 1) SOURCE: GEOLOGIC MAP OF THE GOLETA 7.5 MINUTE QUADRANGLE, SANTA BARBARA COUNTY, CALIFORNIA, VERSION 1.0, BY SCOTT A. MINOR, KARL S. KELLOGG, RICHARD D. STANLEY, AND THODORE R. BRANDT OPEN FILE REPORT 2007-1403 (U.S. Geological Survey 2007).
2) REFER TO FIGURE 3b FOR EXPLANATION OF GEOLOGIC UNITS AND MAP SYMBOLS.

af — Artificial fill (Holocene) —Fill used for construction of highways, roads, buildings, airport runways, and dams

Qa — Active channel alluvium (Holocene) —Unconsolidated sediments, primarily pebble to boulder gravel, in modern stream channels. Thickness less than 5 m

Qb — Beach deposits (Holocene) —Unconsolidated sand along coastal beaches. Thickness varies seasonally are rarely exceeds 5 m

Qe — Estuarine deposits (Holocene) —Locally organic-rich clay, silt, and subordinate sand deposited primarily in peritidal environment in low-lying coastal areas of modern and historically active sloughs. Maximum thickness probably less than 20 m

Qas — Asphalt deposits (Holocene) —Black, tar-like asphalt that represents weathered and biodegraded oil derived from nearby natural seeps. Typically near asphalt-filled fractures in bedrock exposed in sea cliffs

Qdf — Debris-flow deposits (Holocene and upper Pleistocene) —Massive, weakly consolidated rock-debris breccia derived from rock units exposed upslope. Mainly located along lower flanks of Santa Ynez Mountains, where deposits estimated to be less than 5 m thick

Qac — Alluvium and colluvium (Holocene and upper Pleistocene) —Poorly consolidated silt, sand, and gravel deposits of modern drainages and piedmont alluvial fans and floodplains. Exposed thickness generally less than 10 m

Qc — Colluvium (Holocene and upper Pleistocene) —Poorly consolidated, poorly stratified, and poorly sorted deposits that mantle gentle to moderate slopes and are chiefly derived from weathering and down-slope movement of nearby bedrock. Maximum thickness probably less than 15 m

Qls — Landslide deposits (Holocene to middle Pleistocene) —Deposits of diverse slope-movement processes ranging from poorly sorted, disrupted mixtures of rock fragments and soil to relatively intact bedrock slump blocks. Largest landslide deposits may be as thick as 60 m

Qtc — Travertine and caliche? deposits (Holocene? and Pleistocene?) —White, massive, locally vuggy deposits of calcium carbonate. Deposits, depicted by point symbols on the map, are localized along or near faults

Qia — Intermediate alluvial deposits (upper Pleistocene) —Weakly consolidated, stratified silt, sand, and gravel that form low, rounded, moderately disected terraces and piedmont alluvial fans that rest at higher elevations than the modern coastal piedmont surface underlain by unit Qac. Thickness probably locally exceeds 20 m

Qmt — Marine-terrace deposits (upper Pleistocene) —Weakly to moderately consolidated, variably stratified gravel, sand, and silt deposited as marine intertidal, beach, and estuarine deposits (fossiliferous; basal ~1 m) and overlying nonmarine eolian, alluvial, and colluvial deposits. Marine-terrace deposits rest on elevated marine wave-cut platforms and form single terraces or flights of terraces ranging in elevation from 10 to 90 m (30-300 ft) and in age from 45ka (oxygen isotope substage 3a) to 105ka (substage 5c). Maximum exposed thickness about 20 m

Qoa — Older alluvial deposits (upper and middle Pleistocene) —Moderately consolidated, crudely stratified, poorly sorted sand and sandstone, gravel, conglomerate, and breccia, and rare interbeds of clay, silt, and mudstone comprising proximal to distal facies of alluvial fans shed from the Santa Ynez Mountains. Unit forms dissected, gently south sloping elevated terraces, interfluvial caps, and other erosional remnants as thick as 35 m

Qsb — Santa Barbara Formation (middle and lower Pleistocene) —Chiefly marine, pale-gray, -buff, and -tan, friable, bioturbated and massive sandstone; includes subordinate interbeds and intervals of shale, siltstone, and silty to clayey sandstone. Contains diverse assemblage of marine invertebrate fossils. Rare conglomeratic lenses become more common up section, and uppermost part of unit locally interfingers with nonmarine older alluvial deposits (Qoa). Maximum exposed thickness approximately 300 m

Unnamed sedimentary rocks east of Goleta Pier (Pleistocene and Pliocene?) —Marine conglomerate, sandstone, siltstone, and mudstone mapped as three unnamed, lithologically distinct units:

Qcg — Conglomeratic unit (middle and lower Pleistocene) —Conglomerate sandstone, siltstone, and mudstone probably deposited within ancient submarine canyon eroded into underlying Pleistocene and Pliocene rocks (Qss, Tsq). Contains marine fossils. Conglomerate contains clasts derived from the Sisquoc Formation (Tsq, Monterey Formation (Tmu, Tmm, Tml), and older units. Width of paleo submarine channel exposed in sea cliff about 610 m and minimum axial thickness of unit 33 m

Qss — Sandstone unit (lower Pleistocene?) —Laminated and bioturbated sandstone, siltstone, and subordinate mudstone and conglomerate. Contains marine fossils. Unit contains clasts derived from the Sisquoc Formation (Tsq) and (or) Monterey Formation (Tmu, Tmm, Tml) Exposed thickness 45 - 60 m

QTst — Siltstone unit (lower Pleistocene and upper Pliocene?) —Massive and extensively bioturbated siltstone, mudstone, and silty sandstone. Contains marine fossils. Exposed thickness about 45 m

Tsq — Sisquoc Formation (lower Pliocene and upper Miocene) —Marine tan to white-weathering, diatomaceous mudstone and shale, conglomerate, and subordinate dolomite. Unit distinguished by thick beds of conglomerate containing angular clasts (commonly up to 1 m across; some blocks as large as 10 m) derived from the Monterey Formation. Both base and top of Sisquoc consist of erosional unconformities. Maximum preserved thickness of 300 m in sea cliffs

Monterey Formation (Miocene) —Marine, predominantly well-bedded, siliceous and calcareous mudstone and shale with subordinate porcelanite and dolomite. Contains abundant microfossils. Unit deposited at water depths ranging from upper to lower bathyal (150 - 2,000 m). Maximum, composite thickness of Monterey estimated to be about 830 m. The Monterey Formation is divided into three subunits that are distinguished from each other by lithology and age:

Tmu — Upper siliceous unit (upper Miocene) —Marine white to tan-weathering diatomaceous mudstone and shale with subordinate dolomite and porcelanite. Thickness about 250 m near Goleta Pier

35 — **Contact**—Long dashed where approximately located; short-dashed where inferred; dotted where concealed; tic shows direction and angle of dip

Trace of marker bed

Marine-terrace shore line angle—Approximately located; locally coincides with contact between Qmt and older units

52 57 — **Fault**—Long-dashed where approximately located; short dashed where inferred; dotted where concealed; queried where uncertain; tic shows direction and angle of dip; diamond-headed arrow shows bearing and rake of slickenside striae and inferred slip direction of hanging-wall block

? ? — **Strike-slip fault**—Opposing arrows show sense of strike-slip movement, queried where uncertain; bi-directional arrows indicate superposed dextral and sinistral slip on same fault

Normal fault—Ball and bar on apparent downthrown side

Reverse fault—Teeth on apparent upthrown side

Thrust fault—Teeth on apparent upthrown side

Fault-line scarp—Inferred from aerial photographs

Fold and warp axial traces—Long-dashed where approximately located; short-dashed where inferred; dotted where concealed

Anticline—Large arrow indicates plunge direction

Upwarp axis—Mapped in Quaternary deposits where geomorphically expressed

Syncline—Large arrow indicates plunge direction

Downwarp axis—Mapped in Quaternary deposits where geomorphically expressed

Horizontal bedding

20 — **Inclined bedding**—Showing strike and dip

Vertical bedding—Showing strike

65 — **Overturned bedding**—Showing strike and dip

35 — **Inclined bedding**—Showing approximate strike and dip

20 — **Inclined bedding**—Showing strike and dip of beds calculated from bedding trace

(Tsq) 12 — **Concealed bedding**—Measured in unit indicated where temporarily exposed at low tide or in construction excavation

Qas—Asphalt deposit

Qtc—Travertine and caliche? deposit

REGIONAL GEOLOGIC MAP EXPLANATION
GOLETA SANITARY DISTRICT
GOLETA, CALIFORNIA

Tetra Tech, Inc. Santa Barbara, CA
301 Mentor Drive, Suite A
Santa Barbara, CA 93111

TC#	DATE	DRAWN BY	DRAWING NO.	FIGURE NO.
23315-05	7/24/09	STEELE/ RANDALL	7567	3-1b

NOTES: 1) SOURCE: GEOLOGIC MAP OF THE GOLETA 7.5 MINUTE QUADRANGLE, SANTA BARBARA COUNTY, CALIFORNIA, VERSION 1.0, BY SCOTT A. MINOR, KARL S. KELLOGG, RICHARD D. STANLEY, AND THODORE R. BRANDT, OPEN FILE REPORT 2007-1403 (U.S. Geological Survey 2007).
2) REFER TO FIGURE 3a FOR GEOLOGIC MAP.

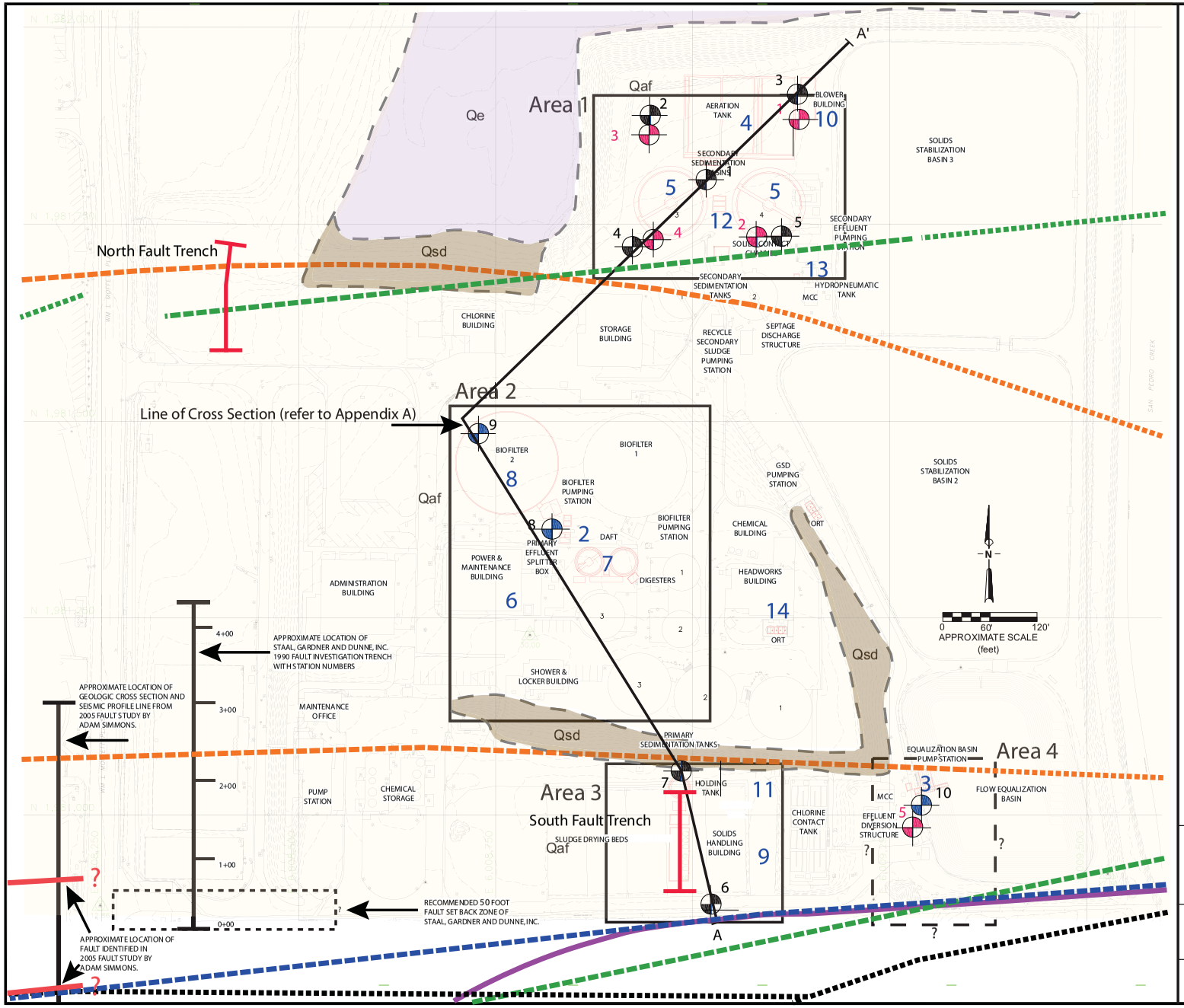

LEGEND

Elevation contour (feet above mean sea level)

Existing structure

Proposed new structure. Structure Number shown on Proposed Projects Improvements list on page 1 of report.

MAPPED FAULTS

Approximate centerlines of mapped fault traces were placed on Figure 4 by interpolation from the original geologic map sources listed below. The fault traces are shown as solid lines where interpreted as exposed at ground surface, long dashed lines where approximately located, and short dashed lines where blind or concealed . Refer to Figure 6 to view the mapped fault traces in relation to the surrounding area.

- *Geologic Map of the Goleta Quadrangle, Santa Barbara County, California,* US Geological Survey Open File Report 2007-1403 (Minor, S., K. Kellogg, R. Stanley, and T. Brandt 2007).
- *Geologic Map of the Western Santa Barbara Fold Belt* (Gurrola, L. October 2002, Revised October 2004).
- *Geologic Map of the Goleta Quadrangle, Santa Barbara County, California,* US Geological Survey Open File Report 2007-1403 (Dibblee, T.W. Jr. 1987).
- *Plate I Geologic Map of the Santa Barbara Area, California,* (Olsen, D.J. 1982).
- *Plate 1 Geologic Map and Sections of the Goleta Basin and Vicinity, Santa Barbara County, California,* US Geological Water Supply Paper 1108 (Upson, J.E. 1951).

EXPLORATORY BORINGS

1 Hollow stem auger boring drilled December 2008 .

1 Cone penetrometer boring drilled January 2009 .

10 Hollow stem auger boring drilled March 2009.

FAULT INVESTIGATION TRENCH

EARTH MATERIALS

Earth material contact (approximate)

Qaf Artificial Fill (Holocene) Derived from native materials, and imported materials including gravel, concrete, and asphalt.

Qe Estuarine Deposits (Holocene) Locally organic-rich clay, silt, and subordinate sand deposited primarily in paratidal environment in low lying coastal areas of modern and historically active sloughs. Maximum thickness probably less than 20 meters.

Qsd Old Sand Dune Deposits (Holocene) Stabilized sand dune deposits laid down since 6,000 years B.P. Contains marine fossils and cultural remains.

Notes:
1. Drawing base map from Drawing No. C-1 Plant Layout and Survey Control, 60 % Submittal, HDR Engineering December 2009.
2. Earth materials descriptions from *Geologic Map of the Goleta Quadrangle, Santa Barbara County, California,* US Geological Survey Open File Report 2007-1403 (Minor, S., Kellogg, K., Stanley, R., and Brandt, T. 2007) and Scientific Resource Surveys, Inc. 1985.
3. Distribution of earth materials based on field interpretation October and December 2008.

FAULT INVESTIGATION TRENCHES
GOLETA SANITARY DISTRICT
GOLETA, CALIFORNIA

Tetra Tech, Inc. Santa Barbara, CA
301 Mentor Drive, Suite A
Santa Barbara, CA 93111

TC#	DATE	DRAWN BY	DRAWING NO.	FIGURE NO.
23315-05	7/27/09	STEELE/ RANDAL	7562	3-2

3.6.5 Seismicity

Active faults are defined as those showing evidence of surface displacement during the Holocene (within the last 11,000 years), and potentially active faults are defined as those showing evidence of surface displacement during Quaternary time (within the last 1.6 million years) (California Department of Conservation Division of Mines and Geology [CDCDMG] 1973, Revised 2007). There are no known active fault zones at the Proposed Project site. According to the *Fault Activity Map of California and Adjacent Areas* (Jennings 1994a), the nearest faults with demonstrated evidence of Holocene displacement include a section of the Santa Ynez Fault approximately 10 miles north of the Proposed Project site, the Red Mountain Fault approximately 23 miles west of the Proposed Project site, and the Los Alamos-Base Line Fault approximately 30 miles northwest of the Proposed Project site. Faults classified as having evidence for late Quaternary displacement (or for being potentially active faults) in the Proposed Project site area include the More Ranch Fault located on or near the southern Proposed Project site boundary, the San Jose Fault located approximately 3 miles north of the Proposed Project site, the Lavigia Fault located approximately 3 miles east of the Proposed Project site, the Mesa Fault located approximately 4 miles east of the Proposed Project site, and sections of the Santa Ynez Fault located approximately 10 miles north of the Proposed Project site (Jennings 1994a).

The More Ranch Fault is of particular interest because geologic maps reviewed for this report indicate that it is located along the southern boundary of the Proposed Project site, passing through the southeast corner of the Proposed Project site (Dibblee 1966; Dibblee 1987; Gurrola 2002, revised 2004; Minor *et. al* 2007; Olsen 1982; Upson 1951) (Figure 3-2). On the regional fault map by Jennings (Jennings 1994a), the fault is interpreted as single trace that is a segment of the More Ranch-Mission Ridge-Arroyo Parida-Santa Ana Fault system that is shown extending from the sea cliff in western Goleta 5 miles west of the Proposed Project site approximately 40 miles (65 kilometers) east to the Ojai Valley area of Ventura County. The maps by Dibblee (1966 and 1987) show a single fault trace passing through the southeast corner of the Proposed Project site. The maps by Olsen (1982) and Minor, e*t al* (2007) show the fault bifurcating into southern and northern branches to the east and west of the Proposed Project site, respectively. The geologic maps by Gurrola (2004) and Upson (1951) indicate separate southern and northern branches of the fault with the southern branch passing through the southeast corner of the Proposed Project site and the northern branch located trending east-west along the remnant of the north escarpment of Mescalitan Island (near Area 1 of the Proposed Project site) (Figure 3-2). A 2005 fault study by Simmons indicated that traces of the More Ranch Fault may exist within 50 feet of planned structures in Areas 1 and 3 (Simmons 2005).

The *Explanatory Text to Accompany the Fault Activity Map of California and Adjacent Areas* (Jennings 1994b) indicates the most recent displacement on the More Ranch Fault occurred between 40,000 to 60,000 years B.P, making it potentially active. The Santa Barbara County's Seismic Safety and Safety Element (Safety Element) of its Comprehensive Plan (County of Santa Barbara 1979, updated 1991) considers the More Ranch Fault to be active (having evidence of activity within the last 11,000 years) based on displacement of older (Pleistocene) alluvium by the fault and Holocene alluvium by an inferred fault trace indicated on Dibblee's 1966 map, and by geomorphic evidence suggested by the pronounced fault scarp along the north side of More and Goleta Mesa, through the middle of Mescalitan Island. The reported displacement of Holocene alluvium indicated on Dibblee's 1966 map was evaluated by the California Department of Conservation Division of Mines and Geology (CDCDMG) in 1977 in *Fault Evaluation Report FER-8* (CDCDMG 1977). The CDCDMG stated that Cross Section C-C', which is drawn through the area on Dibblee's 1966 map showing the displacement of Holocene alluvium, clearly shows that the fault does not cut either the older alluvium or the Holocene alluvium. The area with the displacement of older (Pleistocene) alluvium was an alleged 4 foot high scarp in a golf course, which may

have been modified by grading. The CDCDMG suggested that the offset in the golf course scarp was not observed in the exposure of the fault in a sea cliff west of the location. Therefore, the CDCDMG did not conclude that there was sufficient evidence to support classifying the More Ranch Fault as an active fault. This recommendation was adopted by the CDCDMG and is currently adopted by California Geological Survey (CGS), the predecessor of the CDCDMG. Therefore, the More Ranch Fault is classified as a potentially active fault by the CGS.

However, Dibblee's 1987 geologic map of the Goleta quadrangle continues to show the More Ranch Fault offsetting Holocene alluvium against Pleistocene alluvium, implying Holocene displacement and information presented in research performed by Dr. Gurrola and Dr. Keller of University of California Santa Barbara (UCSB) indicates that the More Ranch Fault is likely to be an active fault (Gurrola *et. al* 2004 and Gurrola 2006).

3.6.5.1 Alquist-Priolo Earthquake Fault Zones

Due to CDCDMG's determination that the More Ranch Fault is not an active fault, the Proposed Project site is not located within an Alquist-Priolo Earthquake Fault Zone (APEFZ) (CDCDMG 2000). The nearest Alquist-Priolo Earthquake Fault Zone is on the Javon Canyon Fault, approximately 24 miles east of the Proposed Project site, at La Conchita in Ventura County. The purpose of the APEFZ Act is to regulate development near active faults in California so as to mitigate the hazard of surface fault rupture (CDCDMG 1973, Revised 2007). The law requires the State Geologist to establish regulatory zones (known as Earthquake Fault Zones) around the surface traces of active faults and to issue appropriate maps. The maps are distributed to all affected cities and counties, and state agencies for their use in planning and controlling new or renewed construction. Local agencies must regulate most development projects within the zones. Affected projects include all land divisions and most structures for human occupancy.

3.6.5.2 July 2009 Fault Investigation for the Proposed Project

The Santa Barbara County's Safety Element classifies the More Ranch Fault as an active fault and states that "No structures of consequence should be constructed within fifty feet of the (active) fault trace, except those structures which cannot be relocated to avoid the fault. This would include projects such as highways, bridges, utilities, and the like." Santa Barbara County's Safety Element also states that "Major or critical structures such as schools, hospitals, police stations, or communication facilities, should not be constructed within 50 feet of a (potentially active) fault trace. All other types of structures should be planned to avoid a location on a fault insofar as practical." The GSD WWTP is a major structure as defined in Santa Barbara County's Safety Element (County of Santa Barbara 1979, updated 1991). Therefore, due to the uncertainty of the proximity of the More Ranch fault to proposed new structures and uncertainty as to whether the More Ranch fault is active or potentially active, Tetra Tech and ESP conducted a fault investigation in July 2009 near the structures planned for Areas 1 and 3 (Tetra Tech 2009b).

The fault investigation was performed July 13 through 17, 2009. The fault investigation trench locations are shown on Figure 3-2. The fault trench locations were selected to evaluate the areas beneath and within 50 feet of structures planned for the Proposed Project. The south trench was located adjacent to the potential southern More Ranch Fault traces (Dibblee 1987; Gurrola 2002, revised 2004; Minor *et. al* 2007; Olsen 1985; Upson 1951) and passes through the proposed locations of the Solids Handling Building and Holding Tank. The north trench was located across the potential northern More Ranch Fault

traces (Gurrola 2002, revised 2004; Upson 1951) in the western area of the Proposed Project site. The northern fault trench was located in the western area of the Proposed Project site instead of in Area 1 at the planned structure locations because:

1. It was not likely to encounter cultural artifacts in this location;

2. This area of the Proposed Project site did not contain existing wastewater treatment facilities that might limit the area of the excavation; and

3. Based the investigations performed by SGD (1990), Simmons (2005), and Hoffman (2005), it seemed likely that a shallower excavation would be required to expose native materials and less likely that a significant groundwater bearing zone would be encountered.

South Fault Trench Findings

The south fault trench was approximately 120 feet long and 9 to 10 feet deep. Earth materials exposed in the south trench included fill material at the ground surface (2-inches of asphaltic concrete at the ground surface underlain by approximately 6-inches of aggregate base) underlain by clayey sand and silty sand alluvium and a poorly graded dune sand to a depth of approximately 4.5 feet bgs at the south end of the trench and 2.5 feet at the northern end (interpreted by Tetra Tech as the Holocene dune sands described by SRS [SRS 1985a-e]), and siltstone (interpreted by Tetra Tech as the unnamed lower Pleistocene to upper Pliocene siltstone of Minor *et. al* 2007) beneath the alluvium and dune sand.

The contact between the alluvium-dune sand and siltstone bedrock appeared to be an unconformable, erosion surface with an apparent shallow dip from north to south from horizontal, with the alluvium-dune sand unit disappearing (pinching out) at the north end of the trench. The alluvium-dune sand unit appears to have been removed by previous grading. The siltstone contained relict bedding tilted to the northwest at approximately 25-30 degrees from horizontal. The siltstone contained evidence of soft sediment deformation (such as rip-up clasts), a prominent sandstone bed, and roughly vertical jointing cracks. No evidence indicative of faulting, such as offset bedding, gouge zones or slickensided fractures were observed in the south fault trench.

North Fault Trench Investigation

The north fault trench was excavated in a landscaped area with a lawn and scatted trees across the former location of the north edge of Mescalitan Island. The north fault trench was approximately 115 feet long and 9 to 17.5 feet deep. The topography along the trench line, from south to north, is relatively flat for the southern 80 feet, then gently slopes to the north across the former location of the north edge of Mescalitan Island, dropping approximately 5 feet in elevation in the northern 35 feet of the trench line. Earth materials exposed in the trench walls included approximately 2 to 3 feet of fill consisting of sandy top soil augmented with biosolids at the surface underlain by alluvium and dune sand to approximately 4 feet bgs with weathered siltstone below 4 feet at the south end of the trench. The dune sand is interpreted by Tetra Tech as the Holocene dune sands described by SRS (SRS 1985a-e), and the siltstone is interpreted as the unnamed lower Pleistocene to upper Pliocene siltstone of Minor *et. al* 2007. The dune sand pinches out in the central portion of the trench, with fill overlying the siltstone. In the northern 30 feet of the trench, sandy lagoon deposits underlie the fill and overlie the siltstone. The sandy lagoon deposits are interpreted by Tetra Tech as the Holocene estuarine deposits of Minor *et. al* 2007.

The contact between the alluvium-dune sand and siltstone appeared to be an unconformable, erosion surface, with the alluvium-dune sand unit disappearing (pinching out) in the central portion of the trench. The dune sand unit appears to have been removed by grading. The contact between the sandy lagoon deposits and siltstone in the northern 30 feet trench also appeared to be an unconformable, erosion surface. The top of the siltstone sloped to the north across the former location of the north edge of Mescalitan Island and exhibited relict erosion undercutting features. The contact between the siltstone and lagoon deposits flattened out north of the former location of the north edge of Mescalitan Island. The siltstone also contained relict bedding tilted to the northwest at approximately 25-30 degrees from horizontal, evidence of soft sediment deformation (such as rip-up clasts), jointing, and clay and sand filled desiccation cracks that ranged in orientation from vertical to moderately dipping to the northwest. No evidence indicative of faulting, such as offset bedding, gouge zones or slickensided fractures were observed in the north fault trench.

3.6.6 Liquefaction

3.6.6.1 Regional Liquefaction Potential Data

The potential for liquefaction in the Proposed Project site was reviewed from data available from Santa Barbara County's Safety Element (County of Santa Barbara 1979, updated 1991) which indicates that the Proposed Project site is in an area with a moderate potential for problems associated with liquefaction.

3.6.6.2 Site Specific Liquefaction Analysis

A site-specific liquefaction analysis was performed by ESP and Tetra Tech for the Proposed Project (ESP 2009 and Tetra Tech 2009a). Information from the boring logs and laboratory testing was initially reviewed to screen the Proposed Project site for liquefaction potential. The boring and laboratory data suggested that there was a potential for liquefaction to occur in Area 1 only; there does not appear to be any potential for liquefaction in Areas 2, 3, and 4 due to the lack of significant groundwater and the presence of shallow siltstone. The CPT data were then analyzed with respect to the site's seismicity assuming a peak ground acceleration (PGA) of 0.40 units of gravity (g), (1 g is equal to 9.81 meters per second squared [m/s^2] or 32 feet per second squared [fts^2]), and an assumed groundwater depth of 20 feet bgs. ESP's analysis confirmed there is a potential for liquefaction to occur in Area 1. It appears that liquefaction could primarily occur below an approximate depth of 20 feet bgs in relatively thin discontinuous layers. If liquefaction were to occur in Area 1, the geologic repercussions would most likely be in the form of dynamic settlement along with a slight possibility of localized soil bearing loss under any foundations constructed between the depths of approximately 20 to 25 feet bgs. Total and differential dynamic settlement is not anticipated to exceed approximately 1.0 inch and 0.5 inch, respectively, under any foundations that are constructed near or below a depth of 20 feet bgs. Dynamic settlement and localized loss of soil bearing, however, is not anticipated to affect above grade structures and surface improvements due to the depth of the overlying non-liquefiable soil layer with respect to the combined thicknesses of the underlying discontinuous liquefiable soil layers (ESP 2009 and Tetra Tech 2009a).

3.6.7 Landslides

The Proposed Project site is located on flat terrain away from significant slopes. On the basis of data in geologic maps of the site area and an evaluation of the site and vicinity made during a reconnaissance by Tetra Tech in December 2008, the site and adjacent properties are not located in an area with the potential

for significant ground failure due to landslides. Santa Barbara County's Safety Element indicates that the Proposed Project site is located in an area with a low problem rating for landslide hazards (County of Santa Barbara 1979, updated 1991).

3.6.8 Expansive Soils

Santa Barbara County's Safety Element includes an evaluation of expansive soil potential for Santa Barbara County based on information from the U.S. Soil Conservation Service. The Safety Element indicates that the Proposed Project site in a low problem rating area for expansive soils (County of Santa Barbara 1979, updated 1991). In the Geohazard Assessment/**Soil Engineering Report** ~~Geotechnical Soil Investigation~~ (Tetra Tech 2009a) conducted for the Proposed Project, an expansion index test was performed on a bulk soil sample of the upper clay soils in Area 1 which produced an expansion index value of 76, in the medium expansion category.

3.7 HAZARDS AND HAZARDOUS MATERIALS

Current operations at GSD involve transport, storage, use, and disposal of hazardous materials. Wastewater treatment operations by intention typically involve the use of hazardous materials during routine operations for disinfection and treatment of wastewater and during routine facility maintenance for painting and diesel powered equipment maintenance. Many of the materials used in routine operation at the Proposed Project site are considered hazardous and while many are stored and used in significant quantity on a daily basis, use of, and access to these materials is strictly controlled. Furthermore, materials used for painting and equipment repair activities generally are maintained at the Proposed Project site in limited quantities and stored and handled following manufacture and regulatory agency guidelines for safety.

Routine operations at the Proposed Project site include use and storage of wastewater treatment chemicals such as sodium hypochlorite, sodium bisulfite and ferrous chloride that are transported to the site in bulk quantities and stored for daily use. Operations at the site also generate the flammable and toxic gases methane and hydrogen sulfide.

The Proposed Project site is not included on the 'Cortese' list of hazardous materials sites compiled pursuant to Government Code Section 65962.5.

3.8 HYDROLOGY AND WATER QUALITY

3.8.1 Regional Hydrogeologic Setting

The Proposed Project site is located on the southern edge of the Goleta North-Central Subbasin of the Goleta Groundwater Basin. The Goleta Groundwater Basin, as defined by the USGS, is divided into two subbasins separated by an inferred low permeability barrier that separates areas of differing water quality. The Goleta North-Central Subbasin extends from the Modoc Fault on the east to a north-west trending line marking an inferred low permeability zone on the west that is due north of Goleta Point, between Section 17 and 18 and 7 and 8, Township 4 North, Range 28 West (Goleta Water District 1982; Santa Barbara County Water Agency 2005). The Goleta North-Central Subbasin is bounded on the southeast and south by the Modoc and More Ranch Faults. Consolidated Tertiary age sedimentary rocks underlie and bound the basin to the north and northeast in the foothills of the Santa Ynez Range, and are uplifted along the More Ranch Fault on the southern boundary. The surface of the basin is drained by the Maria

Ygnacio, Atascadero, San Antonio, San Jose, and Carneros Creeks (California Department of Water Resources 2003).

The Goleta North-Central Subbasin consists mainly of a central alluvial plain and bordering foothills and terraces of the Santa Ynez Range. The basin is underlain to depths of several hundred to several thousand feet by unconsolidated, water bearing Recent and Pleistocene alluvial deposits overlying the Pleistocene Santa Barbara Formation and the unnamed Pleistocene-Pliocene siltstone (which formerly was considered part of the Santa Barbara Formation). The unconsolidated water bearing deposits are underlain by essentially non–water bearing consolidated Tertiary formations (including the Monterey and Sisquoc Formations near the Proposed Project site). The basin is about 4.5 miles long, east to west, and has a maximum width of about 2.5 miles. The alluvial plain slopes gently southward to Goleta Slough, now largely artificially filled, which drains to the ocean past the remnant of Mescalitan Island at Goleta Beach. On the southeast, within Hope Ranch, high hills and terraces rise to altitudes of more than 500 feet above sea level and separate the plain from the ocean. Tertiary consolidated rocks that are uplifted to 50 to 150 feet above sea level are exposed south of the More Ranch Fault along almost the entire south side of the basin. This terrace is trenched at the outlet of Goleta slough south of Mescalitan Island and at Devereux Slough about 3 miles farther west, but otherwise it forms a continuous barrier across the entire seaward side of the Goleta North-Central and West Subbasins (Upson 1951).

The southern boundary of the Goleta Basin and Goleta West-Central Subbasin formed by the More Ranch Fault also acts as a barrier to sea water intrusion. The low permeability of near-surface sediments in the southern portion of the North-Central and West Subbasins (in the Proposed Project site area) creates confined conditions and provides a barrier to contamination from potential surface sources of water quality degradation such as agricultural return flow or infiltration of brackish water in the overlying Goleta Slough. Perched groundwater containing high concentrations of total dissolved solids is present in shallow aquifers above the confining layers. This water is not in general use. Water quality in the North-Central Subbasin is sufficient for many agricultural uses but might require treatment for domestic uses. Water in the West Basin requires treatment for domestic use and can be used for irrigation of a limited variety of crops (Santa Barbara County Water Agency 2005).

3.8.2 Local Hydrogeologic Conditions

Based on the data reviewed for the Geohazard Assessment/**Soil Engineering Report** ~~Geotechnical Soil Investigation~~ conducted for the Proposed Project (Tetra Tech 2009a), the occurrence of groundwater differs between the northern area of the Proposed Project site (Area 1) and the area of the Proposed Project site located in Areas 2, 3, and 4. December 2008 boring data indicate that in the northern area of the Proposed Project site (Area 1), groundwater was encountered near the alluvium-siltstone contact in an unconfined to semi-confined state, at depths ranging from 20 to 27 feet below ground surface (bgs). The groundwater-bearing zone appeared to occur to depths approximately 10 to 12 feet below the top of the siltstone in a more weathered zone. Based on the drier, “moist” conditions encountered in the siltstone below approximately 30 to 35 feet bgs, the groundwater bearing zone in Area 1 appears to be a perched zone up to approximately 10 feet thick within the alluvium and top of the Pleistocene-Pliocene siltstone.

Data from previous assessments and the boring data from the Geohazard Assessment/**Soil Engineering Report** ~~Geotechnical Soil Investigation~~ (Tetra Tech 2009a) conducted for the Proposed Project indicate that a significant groundwater-bearing zone does not exist in the portion of the Proposed Project site located in Areas 2, 3, and 4 to at least 50 feet bgs at each boring location. Minor zones of perched groundwater have been sporadically identified on-site in Areas 2 and 3 at the base of unconsolidated

sediments of the Recent dune sands (interpreted as the Santa Barbara Formation in the studies performed by Geotechnical Consultants, Inc. [1975, 1982]).

3.8.3 Surface Water

San Pedro Creek is located adjacent to the eastern boundary of the Proposed Project site within an engineered channel. Atascadero Creek and San Jose Creeks are located approximately 500 and 700 feet east of the Proposed Project site, respectively, and merge with San Pedro Creek approximately 500 feet southeast of the Proposed Project site. The remnant of the Goleta Slough channel is located along the south side of the remnant of Mescalitan Island, approximately 1,000 feet south of the Proposed Project site, and the Pacific Ocean is approximately 2,000 feet south of the site at Goleta Beach.

3.8.4 Site Drainage

According to the GSD's existing SWPPP (GSD undated), storm water runoff from the Proposed Project area would discharge into the existing solids stabilization basins on the GSD facility, except for one discharge location to the northwest of the Proposed Project area. This discharge location (referred to as Discharge Point #4 in the SWPPP), collects storm water from Area 1 of the Proposed Project area and can discharge storm water runoff into a wetland located to the northwest of the GSD facility under high flow conditions. This discharge point has a valve which is closed most of the time, however, during high flow conditions the valve can be opened to release storm water to the wetland.

3.8.5 Flood Zoning

According to the official Flood Emergency Management Agency's (FEMA's) Flood Hazard Map, the entire GSD facility is located within a 100-year flood hazard area (see Figure 3-3). Specifically, the very northeast corner of Area 1 of the Proposed Project site is within a Floodway Area designated by FEMA as a zone which must be kept free of encroachment by structures (shown as Zone AE in Figure 3-3). The remainder of the Proposed Project is located either within the 500-year Floodplain (Zone X) or the 100-year Floodplain (Zone A), where the inundation level is anticipated to be less than 1 foot by FEMA.

Although the northeast corner of Area 1 is officially designated by FEMA as a Floodway, the FEMA map does not take into consideration the 10 to 15 feet of fill in the area which effectively raises the area above the base flood elevations (Jeff Salt, Operations Manager, Goleta Sanitary District, pers. comm. July 1, 2009).

3.8.6 Reservoir Failure Flooding

A major earthquake could cause reservoir failure. However, the Santa Barbara County Safety Element indicates that the Proposed Project site is not located in an area with a potential to be inundated by reservoir failure (Santa Barbara County 1991).

3.8.7 Tsunamis and Seiches

Tsunamis are sea waves created by undersea fault movement or landslides. In the deep ocean, tsunamis are broad, shallow, fast moving waves. As they near the shoreline, tsunamis are pushed upward, becoming high swells of water that break and rush inland with great force. Historical records indicate the Proposed Project site area may have experienced a 7-foot tsunami during an earthquake in 1812. The Santa Barbara County Safety Element indicates that the Proposed Project site is located in an area with a

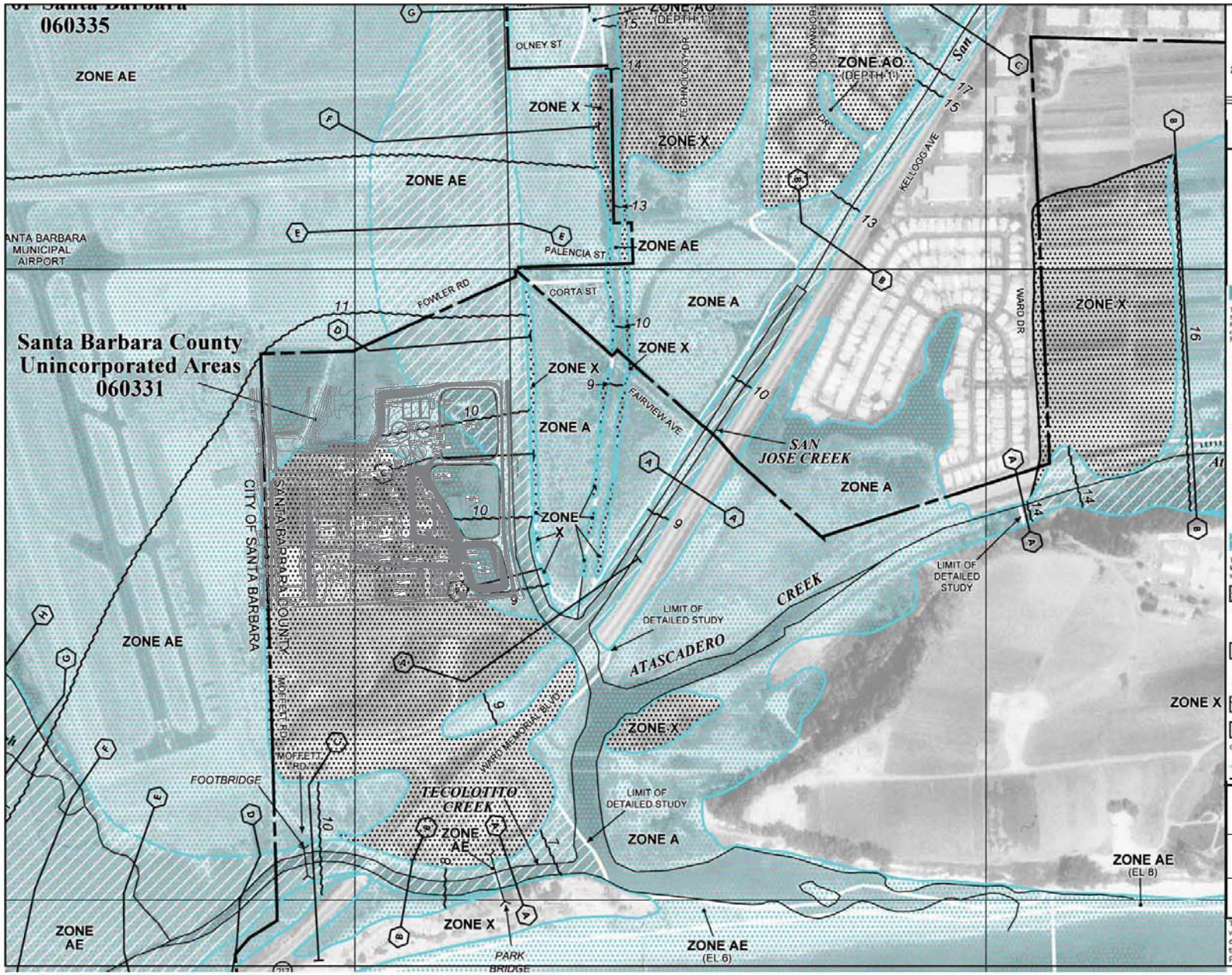

MAP SCALE 1" = 500'

250 0 500 1000 FEET

0 150 300 METE

SPECIAL FLOOD HAZARD AREAS SUBJECT TO INUNDATION BY THE 1% ANNUAL CHANCE FLOOD

The 1% annual chance flood (100-year flood), also known as the base flood, is the flood that has a 1% chance of being equaled or exceeded in any given year. The Special Flood Hazard Area is the area subject to flooding by the 1% annual chance flood. Areas of Special Flood Hazard include Zones A, AE, AH, AO, AR, A99, V, and VE. The Base Flood Elevation is the water-surface elevation of the 1% annual chance flood.

ZONE A	No Base Flood Elevations determined.
ZONE AE	Base Flood Elevations determined.
ZONE AH	Flood depths of 1 to 3 feet (usually areas of ponding); Base Flood Elevations determined.
ZONE AO	Flood depths of 1 to 3 feet (usually sheet flow on sloping terrain); average depths determined. For areas of alluvial fan flooding, velocities also determined.
ZONE AR	Special Flood Hazard Area formerly protected from the 1% annual chance flood by a flood control system that was subsequently decertified. Zone AR indicates that the former flood control system is being restored to provide protection from the 1% annual chance or greater flood.
ZONE A99	Area to be protected from 1% annual chance flood by a Federal flood protection system under construction; no Base Flood Elevations determined.
ZONE V	Coastal flood zone with velocity hazard (wave action); no Base Flood Elevations determined.
ZONE VE	Coastal flood zone with velocity hazard (wave action); Base Flood Elevations determined.

FLOODWAY AREAS IN ZONE AE

The floodway is the channel of a stream plus any adjacent floodplain areas that must be kept free of encroachment so that the 1% annual chance flood can be carried without substantial increases in flood heights.

OTHER FLOOD AREAS

ZONE X	Areas of 0.2% annual chance flood; areas of 1% annual chance flood with average depths of less than 1 foot or with drainage areas less than 1 square mile; and areas protected by levees from 1% annual chance flood.

OTHER AREAS

ZONE X	Areas determined to be outside the 0.2% annual chance floodplain.
ZONE D	Areas in which flood hazards are undetermined, but possible.

COASTAL BARRIER RESOURCES SYSTEM (CBRS) AREAS

OTHERWISE PROTECTED AREAS (OPAs)

CBRS areas and OPAs are normally located within or adjacent to Special Flood Hazard Areas.

1% annual chance floodplain boundary

0.2% annual chance floodplain boundary

FEMA MAP
GOLETA SANITARY DISTRICT
GOLETA, CALIFORNIA

Tetra Tech, Inc. Santa Barbara, CA
301 Mentor Drive, Suite A
Santa Barbara, CA 93111

TC#	DATE	DRAWN BY	DRAWING NO.	FIGURE NO.
23315-05	9/4/09	STEELE/ RANDAL	7563	3-3

This is an official copy of a portion of the above referenced flood map. It was extracted using F-MIT On-Line. This map does not reflect changes or amendments which may have been made subsequent to the date on the title block. For the latest product information about National Flood Insurance Program flood maps check the FEMA Flood Map Store at www.msc.fema.gov

4A. Aesthetics

Would the project:

	Potentially Significant Impact	*Less Than Significant with Mitigation Incorporation*	*Less Than Significant Impact*	*No Impact*
a. Have substantial adverse effect on a scenic vista?	☐	☐	☐	☒
b. Substantially damage scenic resources, including, but not limited to trees, rock outcroppings and historic buildings within a state scenic highway?	☐	☐	☐	☒
c. Substantially degrade the existing visual character or quality of the site and its surroundings?	☐	☐	☒	☐
d. Create a new source of substantial light or glare that would adversely affect day or nighttime views in the area?	☐	☐	☒	☐

Explanation

a. No Impact. The Proposed Project would not have an adverse effect on scenic vistas. The Proposed Project site is currently developed with the existing GSD facility. The heights of the proposed new structures are as follows:

Structure	Height (feet above existing grade)
Shower and Locker Room	20
Blower Building	16
Solids Handling Building	18
Secondary Sedimentation Tanks	4
Sludge Handling Tank	14
Cogeneration Plant	7.5

The Proposed Project includes facilities that are similar in height, scale, and massing to those currently on the existing GSD. The Proposed Project does not contain any buildings or structures that are higher than the existing buildings at the site. The opportunities for views from vantage points adjacent to the site would remain similar to existing conditions. There would be no impact on scenic vistas generated by the Proposed Project, and no further study of this issue is required.

b. No Impact. The Proposed Project would not have a substantial adverse effect on scenic resources, including those located within a designated scenic highway. The Proposed Project site is bounded by Moffett Place to the west and north, and Highway 217 to the east. There are no designated State Scenic Highways, County Scenic Highways, National Scenic Byways, Historic Parkways, or eligible State Scenic Highways near or within view of the Proposed Project site. The Proposed Project site includes pavement and buildings, and no rock outcroppings, trees, historic buildings, or other physical features that

would constitute important scenic resources (Tetra Tech, Inc. 2008). Therefore, the Proposed Project would not result in any impacts to scenic resources located within a designated scenic highway. No further study of this issue is required.

c. Less-Than-Significant Impact. The Proposed Project would not substantially degrade the existing visual character, or the visual quality of the project site and its surroundings. The Proposed Project site is currently developed with the existing GSD facility. The Proposed Project includes facilities that are similar in height, scale, and massing to those currently on the existing GSD. Therefore, the Proposed Project is not expected to substantially alter the existing visual character of the site or its surroundings.

d. Less-Than-Significant Impact. The Proposed Project would not adversely affect day or nighttime views in the area through the addition of new sources of light or glare. The closest residential development to the GSD property are residences located 500 feet to the east of the facility. New sources of light as part of the Proposed Project would be exterior lights and security lighting, which would create a minimal amount of light or glare above the existing conditions.

Further Study Required: No further study of this issue area is required.

4B. Agriculture Resources

Would the project:

	Potentially Significant Impact	*Less Than Significant with Mitigation Incorporation*	*Less Than Significant Impact*	*No Impact*
a. Convert Prime Farmland, Unique Farmland, or Farmland of Statewide Importance (Farmland), as shown on the maps prepared pursuant to the Farmland Mapping and Monitoring Program of the California Resources Agency, to non-agricultural use?	☐	☐	☐	☒
b. Conflict with existing zoning for agricultural use, or a Williamson Act contract?	☐	☐	☐	☒
c. Involve other changes in the existing environment which, due to their location or nature, could result in conversion of Farmland, to non-agricultural use?	☐	☐	☐	☒

Explanation

a. No Impact. The Proposed Project would not convert Farmland to non-agricultural uses. The project site is in a coastal area surrounded by the Santa Barbara Municipal Airport, undeveloped coastal habitat, residences, and businesses, and is currently developed with asphalt, concrete holding basins, and office and maintenance buildings. The project site was not mapped or designated as farmland by the Farmland Mapping and Monitoring Program (California Department of Conservation 2007). The Santa Barbara County Important Farmland Map 2006 designated the project site as urban and built up land (California Department of Conservation 2007). Therefore, no impact to Prime Farmland, Unique Farmland, or Farmland of Statewide Importance would occur. No further study of this issue is required.

b. No Impact. The Proposed Project would not conflict with agricultural zoning or a Williamson Act contract. The Proposed Project site is in mixed undeveloped coastal habitat area with scattered development and the Santa Barbara Airport (Tetra Tech 2008). The Proposed Project site is presently zoned Public Utility (Santa Barbara County Planning & Development 2006). Further, the County of Santa Barbara Williamson Act Land Map 2006 designates the Proposed Project area as urban and built up land (California Department of Conservation 2006). Therefore, no further study of this issue is required.

c. No Impact. Implementation of the Proposed Project would not result in changes to the environment that could convert farmland to non-agricultural uses. The Proposed Project site is currently developed with asphalt, concrete holding basins, and office and maintenance buildings. The Proposed Project would include improvements within the existing facility that are currently covered with asphalt or planted lawn (Tetra Tech, Inc. 2008). Therefore, the Proposed Project would not result in the conversion of farmland to non-agricultural uses, and no further study of this issue is required.

Further Study Required: No further study of agricultural resources is required.

4C. Air Quality

Would the project:

	Potentially Significant Impact	*Less Than Significant with Mitigation Incorporation*	*Less Than Significant Impact*	*No Impact*
a. Conflict with or obstruct implementation of the applicable Air Quality Attainment Plan?	☐	☐	☒	☐
b. Violate any air quality standard or contribute substantially to an existing or projected air quality violation?	☐	☐	☒	☐
c. Result in a cumulatively considerable net increase of any criteria pollutant for which the project region is non-attainment under an applicable federal or state ambient air quality standard (including releasing emissions that exceed quantitative thresholds for ozone precursors)?	☐	☐	☒	☐
d. Create or contribute to a non-stationary source "hotspot" (primarily carbon monoxide)?	☐	☐	☒	☐
e. Expose sensitive receptors to substantial pollutant concentrations?	☐	☐	☒	☐
f. Create objectionable odors affecting a substantial number of people?	☐	☐	☒	☐
g. Create or contribute to air toxics hot spots or contribute to an increase in diesel particulate matter health related issues?	☐	☐	☒	☐
h. Create or contribute to an increase in greenhouse gases?	☐	☐	☒	☐
i. Create or contribute to an asbestos issue?	☐	☐	☒	☐

Explanation

a. Less-Than-Significant Impact. Under the CAA, the SBCAPCD is required to reduce emissions of criteria pollutants for which the County is in non-attainment. Strategies to achieve these emissions reductions are detailed in the Air Quality Attainment Plan (AQAP) (SBCAPCD 2007). The AQAP is based on Santa Barbara County Association of Governments' (SCAG) population projections. Population growth is typically associated with the construction of residential units or large employment centers. A project would be inconsistent with the AQAP if it results in population and/or employment growth that exceeds growth estimates for the area.

The Proposed Project does not involve an increase in flow capacity to the existing facility and therefore, would have no impact on population growth in the region. The Proposed Project would only generate a net increase of two vehicle trips a day (see Appendix D Traffic Study). This is an insignificant increase in average daily traffic and is consistent with the population growth for the area. Because the Proposed Project would not generate population or employment growth, and the Proposed Project's emissions are accounted for in the current AQAP, the Proposed Project would have a less-than-significant impact on the applicable AQAP and no further study of this issue is required.

b,c. Less-Than-Significant Impact.

Construction

Although quantitative thresholds of significance are not currently in place for short-term emissions, CEQA requires that short-term impacts be discussed in the environmental document. In the interest of public disclosure, the SBCAPCD recommends that construction-related nitrous oxides (NOx), reactive organic compounds (ROC), PM_{10}, or $PM_{2.5}$ emissions from diesel and gasoline powered equipment, paving and other activities, be quantified. SBCAPCD uses 25 tons per year for ROC or NOx as a guideline for determining the significance of construction impacts. Further, if the combined emissions from all construction equipment used to build a stationary source has the potential to exceed 25 tons of any pollutant in a 12-month period, except CO, the owner of the stationary source is required to provide offsets under SBCAPCD Rule 804.

Construction of the Proposed Project has the potential to create air quality impacts associated with tailpipe emissions from heavy duty construction equipment and worker commuter trips as well as fugitive dust emissions from demolition, site preparation, and building activities. In addition, ROC emissions associated with building materials and paving would also occur. All emissions from the construction of the Proposed Project were quantified with the use of the URBEMIS 2007. URBEMIS 2007 implements SBCAPCD and State guidance with CARB's EMFAC2007 mobile source emissions model to estimate emissions associated with the construction and operation of transportation and land use projects. The URBEMIS 2007 model estimates emissions based on the type of project and the project size. Construction emissions are estimated for each phase of construction, and, using a construction phase schedule, estimates the worst case daily emissions. Construction equipment usage, the phasing schedule and all other input parameters and assumptions used to calculate construction emissions for the Proposed Project are provided in the URBEMIS output sheets provided in Attachment A1 of Appendix A1.

Because of the nature of the project phasing and the four distinct work areas, it is possible that all construction phases (i.e., demolition, grading, building and paving) may be active concurrently at one of the four project areas. To ensure that the worst day emissions were not underestimated, construction phasing was defined such that all phases overlapped for one time slice, representing "worst-case" emissions.

Construction emissions estimated for the worst case **rolling 12-month period** ~~day of the construction period~~ are shown on Table 4C-1 with the respective significance criteria for the SBCAPCD. Because the determination of the worst case **scenario** ~~day~~ is made pollutant by pollutant, the worst case ~~day~~ may not be the same for all pollutants. Because some **construction** phases overlap and some do not, not all phases will be active on any given day. These emissions were estimated with URBEMIS 2007 using conservative assumptions.

Table 4C-1
Unmitigated Construction Emissions (tons/year)

Scenario	ROC	NO_x
Demolition	0.02	0.18
Mass Site Grading	0.29	2.39
Fine Site Grading	0.10	0.82
Building	2.63	17.97
Paving	0.05	0.30
Total	**3.09**	**21.66**
Threshold	25	25
Threshold Exceeded?	No	No

As shown on Table 4C-1, construction emissions would not exceed the SBCAPCD thresholds. Therefore, construction emissions would not result in a significant short-term air quality impact. Nevertheless, the SBCAPCD requires implementation of dust control measures for all projects involving earthmoving activities regardless of the project size or duration. Therefore, Mitigation Measure AIR-1 below is required to comply with SBCAPCD requirements.

Operation

As documented in the SBCAPCD *Scope and Content of Air Quality Sections in Environmental Documents* (SBCAPCD 2007b) and the *Santa Barbara County Environmental Thresholds and Guidelines Manual* (Santa Barbara County Planning and Development Department 2008), the Proposed Project would not have a significant air quality effect on the environment if operation of the Proposed Project would:

- Emit (from all project sources, both stationary and mobile) less than the daily trigger for offsets or Air Quality Impact Analysis set in the SBCAPCD New Source Review Rule for any pollutant (i.e., 240 pounds/day for reactive organic carbons [ROCs] or NO_x, and 80 lbs/day for PM_{10}. There is no daily operational threshold for CO; it is an attainment pollutant); and

- Emit less than 25 pounds per day of NO_x or ROC from motor vehicle trips only; ~~and~~

- **Emit less than 55 pounds per day of ROC or NOx for combined vehicular and stationary source (e.g., emergency generators and boilers) emissions; and**

- Not cause or contribute to a violation of any CAAQS or NAAQS (except ozone).

Operation of the Proposed Project has the potential for air quality impacts associated with tailpipe emissions from commuters and area source emissions associated with heating and air conditioning, landscape maintenance, and architectural coatings. All emissions from these operational emissions sources were quantified using the URBEMIS 2007. URBEMIS 2007 estimates operational emissions based on land use type, project size, and various assumptions including trip generation rates. Trip generation rates for the Proposed Project were taken from the Traffic Study (Associated Transportation Engineers 2008) (see Appendix D). All assumptions and input parameters used for the URBEMIS model, including land use a trip generation rates, are provided in the URBEMIS output sheets provided in Attachment A1 of Appendix A1.

Operation of the Proposed Project also has the potential for air quality impacts associated with combustion sources. Table 4C-2 summarizes the existing combustion sources and the combustion sources that would occur onsite under the Proposed Project. The combustion sources existing at GSD and proposed under the Proposed Project are subject to several operating conditions set forth by GSD's Permit To Operate 8561-R5 from the SBCAPCD, and for the purpose of this analysis, were used to determine the maximum emission rates per source for the Proposed Project.

Table 4C-2
Combustion Sources

Existing Combustion Source	Combustion Source Under Proposed Project
Boiler #1	Boiler #1
Boiler #2	Boiler #2
Flare	Flare
390 Bhp emergency generator	1,000 Bhp emergency generator
600 Bhp emergency generator	1,000 Bhp emergency generator
Diesel dredge	NA[1]
NA	Microturbine[2]

Note:
Bhp Brake horse power
kW kilowatt
NA not applicable
[1]The diesel dredge would be replaced with an electric dredge under the Proposed Project.
[2]The proposed new cogeneration system is assumed to be run on a microturbine.

Mobile Emissions

Emissions from operational motor vehicle trips are summarized in Table 4C-3.

Table 4C-3
Operational Impacts due to Mobile Emissions

Impact Source	ROC (lbs/day)	NOx (lbs/day)
Motor Vehicle Trip Emissions	1.74	0.24
Operation – Motor Vehicle Emission Threshold	25	25
Exceeds Threshold	No	No

Operation of the Proposed Project would require two additional onsite staff and has minimal impact to the overall net emission increase from motor vehicle trips. Because emissions would be below thresholds, impacts would be less than significant.

Stationary Emissions

Area Source Emissions**.** Area source emissions from heating and air conditioning, landscape maintenance, and architectural coatings are shown in the URBEMIS output files contained in Attachment A1 of Appendix A1.

Combustion Sources. The emissions for current operation (under the "Baseline" scenario) and operations of the Proposed Project (under the "Future **Design**" scenario) are provided in pounds per day and tons per year in Tables 4C-4 and 4C-5, respectively. Emissions for each combustion source are provided in Appendix A1.

The Goleta Sanitary District wastewater treatment facility was originally permitted and designed in 1985 to accommodate a design flow of 9 million gallons per day (MGD) measured in the dry weather period, typically in the months of June, July and August of the year. Under the Proposed Project, the WWTP would continue to operate at a design flow of 9 MGD. This corresponds to the "future design" scenario analyzed in the air quality analysis. The "baseline" scenario represents the actual operational conditions used at the WWTP today, including actual flow rates and existing equipment. The "future" scenario represents the WWTP at the completion of construction with the new equipment installed and operating at 5.1 MGD, which is the annual average influent that the WWTP has been experiencing over the last four years.

Table 4C-4
Daily Combustion Source Emissions in Pounds/Day

Pollutant	Baseline 2008 (lbs/day)	Future Design (~~5.1~~ 9.0 MGD) (lbs/day)	Future Design - Baseline (lbs/day)
ROC	34.05	27.28	-6.77
NO_x	144.41	35.67	-108.74
CO	139.95	140.77	0.82
SO_x	26.86	26.27	-0.59
$PM_{2.5}$	14.66	6.73	-7.93
PM_{10}	14.54	6.73	-7.81

Table 4C-5
Daily Combustion Source Emissions in Tons/Year

Pollutant	Baseline 2008 (tons/year)	Future Design (~~5.1~~ 9.0 MGD) (tons/year)	Future Design – Baseline (tons/year)
ROC	4.80	4.76	-0.04
NO_x	7.44	5.73	-1.71
CO	21.50	21.63	0.13
SO_x	4.81	4.79	-0.02
$PM_{2.5}$	1.34	1.20	-0.14
PM_{10}	1.34	1.20	-0.14

Summary of Operational Impacts

Table 4C-6 provides a summary of all mobile sources and stationary sources (including area sources and combustion sources) associated with operation of the Proposed Project, and a comparison with significance thresholds. Total operational emissions would not exceed significance thresholds. In addition, because the diesel dredge would be replaced with an electric one, combustion source emissions would decrease under the Proposed Project. Therefore, operational air quality impacts would be less than significant.

Table 4C-6
Operational Impacts Due to Stationary and Mobile Sources

Source	ROC (lbs/day)	NOx (lbs/day)	PM_{10} (lbs/day)
Motor Vehicle Trips	1.74	0.24	0.02
Area Sources	1.71	1.69	0.00
Combustion Sources[1]	27.28	35.67	6.73
Total	**30.73**	**37.60**	**6.75**
Threshold	~~240~~ **55**	~~240~~ **55**	80
Exceeds Threshold?	No	No	No

Note:
[1]Combustion source emissions for the Proposed Project are from the daily emissions for the "Future **Design**" scenario in Table 4C-4.

Nonattainment Review

Any new or modified stationary source with a net emissions increase of any nonattainment pollutant or its precursor which is equal to or greater than the emission levels shown in Table 4C-7 shall submit an application to the SBCAPCD containing an Air Quality Impact Analysis documenting that the emissions will not cause a violation or interfere with the expeditious attainment or maintenance of any national primary ambient air quality standard; or prevent reasonable progress towards the expeditious attainment or maintenance of any NAAQS. In addition, an Air Quality Impact Analysis may be required for any new or modified stationary source that has been determined to have the potential to cause or contribute to a violation of an air quality standard.

Table 4C-7
Nonattainment Pollutant Thresholds Requiring an Air Quality Impact Analysis

Pollutant	Pounds per Day
PM_{10}	80
Carbon Monoxide -- if designated nonattainment	550
All other nonattainment pollutants and precursors	120

New or modified stationary sources with net emissions increases of any nonattainment pollutant or its precursors equal to or greater than any emission levels shown in Table 4C-8 below is required to offset those net emissions increases through actual emission reductions from existing stationary or non-stationary sources.

Table 4C-8
Nonattainment Pollutant Offset Thresholds

Pollutant	Pounds per Day	Tons per Year
PM_{10}	80	15
Carbon Monoxide -- if designated nonattainment	150	25
All other nonattainment pollutants and precursors	55	10

A comparison of the net emissions from the new combustion sources associated with the Proposed Project are presented in Table 4C-9.

Table 4C-9
Nonattainment Review

Impact Source	ROC (lbs/day)	NOx (lbs/day)	PM_{10} (lbs/day)	ROC (tons/year)	NOx (tons/year)	PM_{10} (tons/year)
Net Increase in Future Combustion Source Emissions	-6.44	-108.74	-7.81	-0.04	-1.71	-0.14
Nonattainment Air Quality Impact Analysis Threshold	120	120	80	NA	NA	NA
Nonattainment Pollutant Offset Threshold	55	55	80	10	10	15
Threshold Triggered?	No	No	No	No	No	No

Note:
NA Not applicable

Because emissions would be reduced, thresholds would not be exceeded. Therefore, an Air Quality Impact Analysis or emissions offsets would not be required for the Proposed Project and impacts would be less than significant.

Federal Conformity Review

The Proposed Project is subject to Federal General Conformity requirements because GSD is applying for federal funding for the project. Since the one-hour Federal ozone standard has been revoked and Santa Barbara County is in attainment of the eight-hour Federal ozone standard, the project is in compliance with General Conformity rules and regulations. However, for the purpose of this project, conformity review was conducted as a precaution.

Compliance with the General Conformity Rule can be demonstrated in several ways. Compliance is presumed if the net increase in direct and indirect emissions from a Federal action would be less than the relevant *de minimis* levels. In addition, compliance is presumed if emissions from the Federal action are not considered regionally significant, or are less than 10 percent of the emissions inventory for the region. If net emissions increases exceed the relevant *de minimis* value or 10 percent of the regional emissions inventory, a formal Conformity Determination process is required.

The *de minimis* threshold for sources within Santa Barbara County are 100 tons per year of NO_x and 50 tons per year of volatile organic compounds (VOCs) (similar to reactive organic compounds [ROCs]). The regional emissions inventory for Santa Barbara County is provided in Table 4C-10 below.

The resulting emission increases from the Proposed Project are below the *de minimis* thresholds and are less than 10 percent of the regionally planned emissions as summarized in Table 4C-10. Therefore, the Proposed Project is in compliance with the General Conformity rule and impacts are less than significant.

Table 4C-10
Federal Conformity Review

Source	ROC (tons/year)	NOx (tons/year)	Percent of Total Inventory for Santa Barbara County (%)	Exceeds Thresholds?
Santa Barbara County Inventory				
Stationary Sources	3,666.69	2,096.61	-	-
Area Sources	3,064.28	350.26	-	-
Mobile Sources	8,687.04	13,803.73	-	-
Total	**15,418.01**	**16,250.60**	**-**	**-**
***De Minimis* Threshold**	**50**	**100**	**-**	**-**
Proposed Project Emissions				
Construction – Mobile Sources	3.09	21.66	-	-
Operation – Mobile Sources	0.32	0.04	-	-
Operation – Area Sources	0.31	0.31	-	-
Operation – Combustion Sources	4.76	5.73	-	-
Total	**8.48**	**27.74**	<10	No

Mitigation Measure AIR-1. The SBCAPCD requires the following dust control measures for all projects involving earthmoving activities regardless of the project size or duration. The measures are based on policies adopted in the 1979 AQAP for Santa Barbara County.

- During construction, water trucks or sprinkler systems shall be used to keep all areas of vehicle movement damp enough to prevent dust from leaving the site. At a minimum, this shall include wetting down such areas in the late morning and after work is completed for the day. Increased watering frequency shall be required whenever the wind speed exceeds 15 mph. Reclaimed water shall be used whenever possible.

- The amount of disturbed area shall be minimized and on-site vehicle speeds shall be reduced to 15 mph or less.

- Gravel pads shall be installed at all access points to prevent tracking of mud on to public roads.

- If importation, exportation and stockpiling of fill material are involved, soil stockpiled for more than two days shall be covered, kept moist, or treated with soil binders to prevent dust generation. Trucks transporting fill material to and from the site shall be tarped from the point of origin.

- After clearing, grading, earth moving or excavation is completed, the disturbed area shall be treated by watering, or revegetating, or by spreading soil binders until the area is paved or otherwise developed so that dust generation will not occur.

- The contractor or builder shall designate a person or persons to monitor the dust control program and to order increased watering, as necessary, to prevent transport of dust off-site. Their duties shall include holiday and weekend periods when work may not be in progress. The name and telephone number of such persons shall be provided to the SBCAPCD prior to land use clearance for map recordation and land use clearance for finish grading for the structure.

- Prior to land use clearance, the applicant shall include, as a note on a separate informational sheet to be recorded with map, these dust control requirements. All requirements shall be shown on grading and building plans.

d. Less-Than-Significant Impact. A CO "hot spot" or area of high CO concentration can occur at congested roadway intersections as a result of accumulating vehicle emissions. The County of Santa Barbara's Environmental Thresholds and Guidelines document (Santa Barbara County Planning and Development 2008) lists screening criteria to determine the potential for a project to create or contribute to a CO hotspot. The first screening criteria states: "If a project contributes less than 800 peak hour trips, then CO modeling is not required." The Proposed Project would increase the total Average Daily Trips associated with the operation of the WWTP from 86 to 89 (Appendix D). This volume of traffic is considerably less than the threshold, therefore the impact would be less than significant, and no further study of this issue is required.

e,g. Less-Than-Significant Impact. If a project has the potential to emit toxic or hazardous air pollutants, or is located in close proximity to sensitive receptors, impacts may be considered significant due to increased cancer risk for the affected population, even at a very low level of emissions. Sensitive receptors include land uses that contain a high concentration of sensitive population groups such as residences, schools, daycare centers, and medical and recreational facilities. Sensitive population groups are more susceptible to the effects of air pollution than are the population at large. The closest residential development to the GSD property is a small number of residences in the industrial zoned area located 500 feet directly east of the GSD facility. In addition, the Rancho Goleta mobile home park is located on the east side of Highway 217, with the closest residential mobile homes located approximately 1,530 feet from the eastern boundary of the GSD site.

Operation of the Proposed Project creates the potential to release toxic air contaminants which could impact human health. Therefore, a Health Risk Assessment (HRA) was completed for the Proposed Project (Tetra Tech 2009) and is included in Appendix A2. The HRA provides estimates of risk for the following scenarios:

- Baseline - Operation of the facility as it is currently configured;
- Future - Operation of the facility with proposed upgrades **at the average annual influent capacity (5.1 MGD)** ~~(i.e., the Proposed Project)~~; and
- Future Design - Operation of the facility with proposed upgrades at maximum design influent capacity **(9.0 MGD)**.

The HRA was conducted in accordance with the SBCAPCD's Health Risk Assessment guidelines (SBCAPCD 2008) and the State's Office of Environmental Health Hazard Assessment (OEHHA) guidelines (OEHHA 2005). The air toxics HRA was performed using the Hotspots Analysis and Reporting Program (HARP) software, Version 1.4a (Build 23.07.00). The cancer risk for the point of maximum impact (PMI), the maximum exposed individual resident (MEIR), and maximum exposed individual worker (MEIW) are provided. The chronic and acute non-cancer Hazard Index (HI) risk values were calculated and compared to significance thresholds for chronic and acute non-cancer risk adopted by the Santa Barbara Air Pollution Control District's (SBCAPCD's) Board of Directors. The results of the HRA are summarized in Table 4C-11.

Table 4C-11
Summary of Cancer and Non-Cancer Risk

Risk	Baseline	Future	Future Design	Maximum Risk	Threshold
PMI	7.02E-06	7.27E-06	7.78E-06	7.78E-06	1.0 E-05
MEIR	7.02E-06	7.27E-06	7.78E-06	7.78E-06	1.0 E-05
MEIW	4.40E-06	3.74E-06	6.40E-06	6.40E-06	1.0 E-05
Chronic non-cancer risk	0.0391	0.162	0.275	0.275	1
Acute non-cancer risk	0.684	0.739	0.983[1]	0.983[1]	1

Note:
[1] Refined calculation to determine acute non-cancer risk per OEHHA guidelines. Detailed analysis provided in Section 5.0 of the HRA (Tetra Tech 2009).

Results show that the cancer risks and non-cancer risks for all scenarios are below thresholds. Therefore it is not anticipated that any potential sensitive receptors would be exposed to substantial pollution concentrations and the Proposed Project would result in a less than significant impact. No further study of this issue is required.

f. Less-Than-Significant Impact. If a project has the potential to cause an odor or other nuisance problem which could impact a considerable number of people, then it may be considered significant. A project may emit a pollutant in concentrations that would not otherwise be significant except as a nuisance, for example hydrogen sulfide (H_2S). Odor impacts on residential areas and other sensitive receptors warrant the closest scrutiny, but consideration shall also be given to other land uses where people may congregate, such as recreational facilities, work sites and commercial areas and the buffer zone. Under GSD's SBCAPCD Permit to Operate (PTO) **08561-R5** ~~11528~~, the GSD monitors the digester gas H_2S (peak and monthly average) which ensures proper process operation. Additionally, the GSD has never violated their permit conditions (Broughton 2008).

The Proposed Project is surrounded by open land and the Santa Barbara Airport, therefore the potential to expose a substantial number of people to objectionable odors is minimized. Under SBCAPCD PTO 8561, the facility is required to report their peak H_2S concentrations which ensures proper operation of the facility and reduces the potential for odor related complaints. Additionally, the WWTP has historically had no odor events or complaints (Broughton 2008).

For odor abatement, the existing WWTP has an odor reduction tower for the influent pump station and an odor reduction tower for the headworks. Under the Proposed Project, the influent pump station odor reduction tower would remain in place but the headworks odor reduction tower would be replaced with a new odor reduction tower on the same concrete pad. These two odor reduction towers are currently used and will continue to be used to reduce odorous emissions from the WWTP under the proposed new design. In addition, there have never been any odor complaints on the WWTP. Therefore, odor impacts under the Proposed Project would be less than significant.

In addition, as part of its permit application process with the SBCAPCD, GSD must also submit an Odor Abatement Plan (OAP) that contains the following elements:

1. Name and telephone number of contact person(s) at the facility responsible for logging in and responding to odor complaints;

2. Policy and procedures describing the actions to be taken when an odor complaint is received, including the training provided to the staff on how to respond;

3. Description of potential odor sources at the facility;

4. Description of potential methods for reducing odors, including minimizing idling of delivery and service trucks and buses, process changes, facility modifications and/or feasible add-on air pollution control equipment; and

5. Contingency measures to curtail emissions in the event of a public nuisance complaint.

Therefore, implementation of this plan would establish procedures for correction measures in the event that there is an odor complaint, which would further reduce the potential for odor impacts.

h. Less-Than-Significant Impact. With the passage of AB 32, the CARB has broad authority to regulate GHG emissions as necessary to meet the emission reduction goals of the statute. This may include authority to establish emission reduction requirements for new land use projects, and may also enable them to recommend statewide thresholds for GHG under CEQA.

The SBCAPCD, CAPCOA, and other California agencies are working to develop CEQA thresholds of significance that would guide classification of impacts associated with global climate change in CEQA documents. Absent such thresholds, CEQA lead agencies must rely on their own careful judgment, based on scientific and factual data to the extent possible, in determining if impacts related to global climate change are significant. Unfortunately, scientific and factual data are not sufficiently available to judge, without undo speculation, whether projects with relatively small, incremental contributions to the State's GHG totals are cumulatively significant or insignificant. In the interim, only relatively large GHG emitters are considered, under any reasonable review, to have significant effects on the environment; that is, projects that are estimated to emit the equivalent of ~~50,000 tons of CO_2 from both stationary and mobile sources during long-term operations, and projects estimated to emit~~ 25,000 **metric** tons of CO_2 emissions from stationary sources **of combustion** ~~alone~~, from long-term operations.[1] Projects below these levels remain unclassifiable until more evidence becomes available.

[1] California Air Resources Board Resolution 07-54 establishes 25,000 metric tons of GHG emissions as the threshold for identifying the largest stationary emission sources in California for purposes of requiring the annual

The CO_2 emissions from operational activities under the Proposed Project were calculated using URBEMIS and are included in the output files in Attachment A1 of Appendix A1. Mobile and area sources from the Proposed Project would generate 2,187.82 1bs/day, or 399 tons/year of CO_2 **or 8,379 metric tons of CO_2 equivalent per year (MTCO2e/year)**, which is much less than the **25,000** ~~50,000~~ tons of CO_2 emitted from large GHG emitters. **This is also much less than 10,000 MTCO2e per year which is currently considered by the SBCAPCD as potentially significant.** Therefore, GHG impacts would be less than significant.

i. Less-Than-Significant Impact. Asbestos is listed as a toxic air contaminant by both ARB and by the U.S. Environmental Protection Agency (EPA). Asbestos is likely to be found in buildings and pipelines constructed before 1979 and almost certain to be present in those constructed before 1950. No pipelines would be removed under the Proposed Project. The Shower and Locker Building that would be replaced during the Proposed Project was constructed in 1962 and renovated in 1988. During the renovation, all asbestos was removed. Therefore, most likely, the facility does not contain asbestos. In the event that asbestos is discovered during **demolition or renovation activities** ~~construction~~, the GSD **would be subject to the notification requirements set forth in the National Emission Standards for Hazardous Air Pollutants-Asbestos** ~~follow SBCAPCD Rules and Regulations through notification of construction, mitigation, and removal of asbestos~~. Therefore, impacts are less than significant.

Further Study Required: No further study of air quality impacts is required.

reporting of emissions. ~~This threshold is just over 0.005% of California's total inventory of GHG emissions for 2004 and 50,000 metric tons is just over 0.01% of 2004 total GHG emissions.~~

4D. Biological Resources

Would the project:

	Potentially Significant Impact	*Less Than Significant with Mitigation Incorporation*	*Less Than Significant Impact*	*No Impact*
a. Adversely impact, either directly or indirectly or through habitat modifications, any endangered threatened or rare species as listed in Title 14 of the California Code of Regulations (Section 670.2 or 670.5) or in Title 50 of the Code of Federal Regulations (Section 17.11 or 17.12)?	☐	☐	☒	☐
b. Have a substantial adverse effect, either directly or through habitat modifications, on any species identified as a candidate, sensitive, or special status species in local or regional plans, policies, or regulations, or by the California Department of Fish and Game or US Fish and Wildlife Service?	☐	☒	☐	☐
c. Have a substantial adverse effect on any riparian habitat or other sensitive natural community identified in local or regional plans, policies, and regulations or by the California Department of Fish and Game or US Fish and Wildlife Service?	☐	☐	☒	☐
d. Have a substantial adverse effect on federally protected wetlands as defined by Section 404 of the Clean Water Act (including, but not limited to, marsh, vernal pool, coastal, etc.) through direct removal, filling, hydrological interruption, or other means?	☐	☐	☒	☐
e. Interfere substantially with the movement of any native resident or migratory fish or wildlife species or with established native resident or migratory wildlife corridors, or impede the use of native wildlife nursery sites?	☐	☐	☒	☐
f. Conflict with any local policies or ordinances protecting biological resources, such as a tree preservation policy or ordinance?	☐	☐	☒	☐
g. Conflict with the provisions of an adopted Habitat Conservation Plan, Natural Community Conservation Plan, or other approved local, regional, or state habitat conservation plan?	☐	☐	☐	☒

Explanation

a. Less-Than-Significant Impact. Implementation of the Proposed Project would have less than significant impacts on special-status species. Special-status species are those that are candidates, proposed, or listed as threatened or endangered by the U.S. Fish and Wildlife Service (USFWS) or the California Department of Fish and Game (CDFG), plants that are considered sensitive species by the California Native Plant Society (CNPS), or wildlife that are considered species of special concern by the California Department of Fish and Game (CSC).

The Proposed Project site is currently developed with paved areas, buildings, and concrete structures. No natural habitats remain on the project site (Tetra Tech 2008). A search was performed of the California Natural Diversity Database (CNDDB) for the Goleta USGS 7.5-minute quadrangle (CDFG 2008). Additional references also searched include the Goleta Slough Management Committee (GSMC) special-status plants and animals website (GSMC 2008), UCSB Faculty and Family Student Housing Open Space Plan & Long Range Development Plan (LRDP) Environmental Impact Report (EIR) (EIP 2004), City of Goleta General Plan/Coastal Land Use Plan EIR (City of Goleta 2006), and the GSD EIR (Interface 1991). These resources were used to develop a preliminary list of special-status species that could occur in the project vicinity. A site visit was also conducted to verify the existing conditions at the GSD (Tetra Tech 2008). Tables 4D-1, 4D-2, and 4D-3 list the special-status wildlife and plant species as well as sensitive plant communities that have been recorded within 5 miles of the GSD.

Given the developed nature of the proposed project site, special-status plant species and/or sensitive plant communities are highly unlikely to occur within the site. The close proximity of GSD to the Goleta Slough, Pacific Ocean, and Lake Los Carneros attracts a wide variety of bird species. The solid stabilization basins provide a low quality aquatic habitat for these birds. Current daily site activities do not disrupt these bird species. The Proposed Project would involve construction in areas around the stabilization basins. Birds would be indirectly affected during construction. After construction, daily site activities at the GSD would resume. Therefore, given the short-term duration of the disturbance, a less-than-significant impact would occur, and no further study of this issue is required.

Table 4D-1
Special-Status Wildlife Species Known to be within 5 Miles of the Proposed Project Site

Species Name	Scientific Name	Status	Source(s)
Acorn woodpecker	*Melnerpes formicivorus*	LR	GSMC 2008
American badger	*Taxidea taxus*	CSC	EIP 2004, GSMC 2008
American bittern	*Botaurus lengtiginosus*	CSC	GSMC 2008
American white pelican	*Pelecanus erythrorhyncos*	CSC	GSMC 2008
Arroyo chub	*Gila orcutti*	CSC	GSMC 2008
Bald eagle	*Haliaeetus leucocephalus*	SE	GSMC 2008
Bank swallow	*Riparia riparia*	ST	GSMC 2008
Belding's savannah sparrow	*Passerculus sandwichensis beldingi*	SE	CNDDB 2008, EIP 2004, Interface 1991, GSMC 2008
Black skimmer	*Rynchops niger*	CSC	GSMC 2008
Black swift	*Cypseloides niger*	CSC	GSMC 2008

Table 4D-1
Special-Status Wildlife Species Known to be within 5 Miles of the Proposed Project Site

Species Name	Scientific Name	Status	Source(s)
Black-crowned night heron	*Nycticorax nycticorax*	LR	GSMC 2008
Brown pelican	*Pelecanus occidentalis californicus*	FE, SE	EIP 2004, Interface 1991, GSMC 2008
Burrowing owl	*Athene cunicularia*	PT	EIP 2004, GSMC 2008
California black rail	*Laterallus jamaicensis coturniculus*	ST	GSMC 2008
California brackishwater snail	*Tryonia imitator*	Tracked	CNDDB 2008
California gull	*Larus californicus*	CSC	GSMC 2008
California horned lark	*Eremophila alpestris actia*	LR	GSMC 2008
California horned lizard	*Phrynosoma coronatum frontale*	CSC	EIP 2004, GSMC 2008
California legless lizard	*Anniella pulchra pulchra*	CSC	EIP 2004
California least tern	*Sterna antillarum browni*	FE, SE, FP	EIP 2004, GSMC 2008
California quail	*Callipepla californica*	LR	GSMC 2008
Caspian tern	*Sternia caspia*	LR	GSMC 2008
Coast horned lark	*Eremophilus alpestris actia*	CSC	EIP 2004
Coast patch-nosed snake	*Salvadora hexalepis virgultea*	CSC	EIP 2004
Coast range newt	*Taricha torosa*	CSC	GSMC 2008
Common loon	*Gavia immer*	CSC	GSMC 2008
Cooper's hawk	*Accipiter cooperi*	CSC	EIP 2004, GSMC 2008
Double-created cormorant	*Phalacrocorax auritus*	CSC	GSMC 2008
Dusky-footed wood rat	*Neotoma fuscipes*	LR	GSMC 2008
Elegant tern	*Sterna elegans*	CSC	GSMC 2008
Forster's tern	*Sterna forsteri*	LR	GSMC 2008
Frost's tiger beetle	*Cicindela senilis* sub. *frosti*	LR	GSMC 2008
Fulvous whistling duck	*Denrocygna bicolor*	CSC, LR	GSMC 2008
Globose dune beetle	*Coelus globosus*	Tracked	CNDDB 2008, EIP 2004
Golden eagle	*Aquila chrysaetos*	CSC, LR	EIP 2004, GSMC 2008
Great blue heron	*Aredea herodias*	LR	GSMC 2008
Greater roadrunner	*Geococcyx californianus*	LR	GSMC 2008
Grey fox	*Nycticorax nycticorax*	LR	GSMC 2008
Harlequin duck	*Histrionicus histrionicus*	CSC	GSMC 2008

Table 4D-1
Special-Status Wildlife Species Known to be within 5 Miles of the Proposed Project Site

Species Name	Scientific Name	Status	Source(s)
Light-footed clapper rail	*Rallus longirostris levipes*	FE, SE	CNDDB 2008, EIP 2004, GSMC 2008
Little willow flycatcher	*Empidonax trailii brewsteri*	SE, LR	GSMC 2008
Loggerhead shrike	*Lanius ludovicianus*	CSC	EIP 2004, GSMC 2008
Long-billed curlew	*Numenius americanus*	CSC	GSMC 2008
Merlin	*Falco columbarius*	CSC	EIP 2004
Monarch butterfly	*Danaus plexippus*	Tracked, LR	CNDDB, EIP 2004, GSMC 2008
Northern harrier	*Circus cyaneus*	Federally Protected, CSC, LR	EIP 2004, GSMC 2008
Osprey	*Pandion haliaetus*	Federally Protected, CSC	EIP 2004, GSMC 2008
Pallid bat	*Antrozous pallidus*	CSC	EIP 2004, GSMC 2008
Peregrine falcon	*Falco peregrinus anatum*	SC, SE	EIP 2004, Interface 1991, GSMC 2008
Prairie falcon	*Falco mexicanus*	Federally Protected, CSC	EIP 2004, GSMC 2008
Purple martin	*Progne subis*	CSC	GSMC 2008
Red-legged frog	*Rana aurora draytonii*	FT, CSC	EIP 2004, GSMC 2008
San Diego black-tailed jack rabbit	*Lepus californicus bennettii*	CSC	GSMC 2008
San Diego fairy shrimp	*Branchinecta sandiegonensis*	FE	EIP 2004
Sandy beach tiger beetle	*Cicindela hirticollis gravida*	Tracked	CNDDB 2008, EIP 2004
Sharp-shinned hawk	*Accipiter striatus*	Federally Protected, CSC	EIP 2004, GSMC 2008
Short-eared owl	*Asio flammeus*	Federally Protected, CSC, LR	EIP 2004, GSMC 2008
Snowy egret	*Egretta thula*	LR	GSMC 2008
Southwestern pond turtle	*Clemmys marmorata pallida*	CSC	EIP 2004, GSMC 2008
Southwestern willow flycatcher	*Empidonax traillii extimus*	FE, SE	GSMC 2008
Swainson's hawk	*Buteo swainsoni*	LR	GSMC 2008

Table 4D-1
Special-Status Wildlife Species Known to be within 5 Miles of the Proposed Project Site

Species Name	Scientific Name	Status	Source(s)
Tidewater goby	*Eucyclogobius newberryi*	FE, CSC	CNDDB 2008, EIP 2004
Townsend's big-eared bat	*Corynorhinus townsendi*	CSC	UCSB EIR, GSMC 2008
Tricolored blackbird	*Agelaius tricolor*	Federally Protected, CSC	EIP 2004, GSMC 2008
Turkey vulture	*Cathartes aura*	*	EIP 2004
Two-striped garter snake	*Thamnophis hammondii*	CSC	EIP 2004
Vernal pool fairy shrimp	*Branchinecta lynchi*	FT	EIP 2004
Western red bat	*Lasiurus blossevillii*	CSC	EIP 2004
Western screech owl	*Otus kennicottii*	LR	GSMC 2008
Western snowy plover	*Charadrius alexandrinus nivosus*	FT, CSC	CNDDB 2008, EIP 2004, GSMC 2008
White-breasted nuthatch	*Sitta carolinensis*	LR	GSMC 2008
White-faced ibis	*Plegadis chihi*	CSC, LR	GSMC 2008
White-tailed kite	*Elanus leucurus*	Federally Protected, CSC, FP, S.B. County Protected	EIP 2004, GSMC 2008
Yellow-breasted chat	*Icteria virens*	CSC	EIP 2004, GSMC 2008
Yellow warbler	*Dendroica petechia*	CSC, LR	EIP 2004, GSMC 2008
Yuma myotis	*Myotis yumanensis*	CSC	EIP 2004

Status:
CSC – CDFG Species of Special Concern
FE – Federally Endangered
FT – Federally Threatened
FP – CDFG Fully Protected
LR – Locally Rare
PT – Proposed for listing as threatened in California under the California Endangered Species Act.
SC – Federal. Species for which information indicates may warrant listing but for which substantial biological information to support a proposed ruling is lacking.
SE – State Endangered
ST – State Threatened
Tracked – Tracked by CNDDB
* - Locally protected species

Table 4D-2
Special-Status Plant Species Known to Occur within 5 Miles of the Proposed Project Site

Species Name	Scientific Name	Status	Source
Arrow-grass	*Triglochin concinna* var. *concinna*	LC	GSMC 2008
Black-flowered figwort	*Scrophularia atrata*	1B.2	CNDDB 2008
Bitter Gooseberry	*Ribes amarum* var. *hoffmannii*	LC	GSMC 2008
Bur-reed	*Sparganium eurycarpum*	LC	GSMC 2008
California saltbush	*Atriplex claifornica*	LR	GSMC 2008
Chaffweed	*Centunculus minimus*	LC	GSMC 2008
Coast popcorn flower	*Plagiobothrys undulates*	LC	GSMC 2008
Contra Costa goldfields	*Lasthenia conjugens*	FE, 1B.1	CNDDB 2008, EIP 2004
Coulter's goldfields	*Lasthenia glabrata* ssp. *coulteri*	1B.1	CNDDB 2008, EIP 2004, GSMC 2008
Coulter's horseweed	*Conyza coulteri*	LR	GSMC 2008
Coulter's saltbush	*Atriplex coulteri*	1B.2	CNDDB 2008, EIP 2004
Davidson's saltscale	*Atriplex serenana* var. *davidsonii*	1B.2	CNDDB2008, EIP 2004
Dunedelion	*Malacothrix incana*	4	EIP 2004
Estuary seablite	*Suaeda esteroa*	1B.2	CNDDB 2008, EIP 2004, GSMC 2008
Fennel-leaf pondweed	*Potamogeton pectinatus*	LC	GSMC 2008
Giant horsetail	*Equisetum telmateia* var. *braunii*	LC	GSMC 2008
Horned seablite	*Suaeda calceoliformis*	LC	GSMC 2008
Late-flowered mariposa lily	*Calochortus weedii* var. *vestus*	1B.2	CNDDB 2008
Lemmon's canary grass	*Phalaris lemmonnii*	LC	GSMC 2008
Low barley	*Hordeum depressum*	LC	GSMC 2008
Matscale	*Atriplex watsonii*	LR	GSMC 2008
Mature coyote thistle	*Eryngium vaseyi*	LC	GSMC 2008
Meadow barley	*Hordeum brachyantherum*	LC	GSMC 2008
Mesa horkelia	*Horkelia cuneata* ssp. *puberula*	1B.1	CNDDB 2008
Pacific foxtail	*Alopecurus saccatus*	FE, SE	GSMC 2008
Pale-yellow layia	*Layia heterotricha*	1B.1	CNDDB 2008
Parish's glasswort	*Salicornia subterminialis*	LC	GSMC 2008
Pillwort	*Pilularia americana*	LC	GSMC 2008
Plummer's baccharis	*Baccharis plummerae* ssp. *plummerae*	4	EIP 2004
Prickly coyote thistle	*Eryngium armatum*	LC	GSMC 2008
Purslane speedwell	*Veronica peregrine* ssp. *xalapensis*	LC	GSMC 2008
Refugio manzanita	*Arctostaphylos refugioensis*	1B.2	CNDDB 2008
Salt cedar	*Monanthochloe littotalis*	LC	GSMC 2008
Salt marsh bird's beak	*Cordylanthus maritimus* ssp. *maritimus*	FE	Interface 1991, GSMC 2008

Table 4D-2
Special-Status Plant Species Known to Occur within 5 Miles of the Proposed Project Site

Species Name	Scientific Name	Status	Source
Saltwort	*Batis maritime*	LR	GSMC 2008
Santa Barbara honeysuckle	*Lonicera subspicata* var. *subspicata*	1B.2	CNDDB 2008, EIP 2004
Santa Barbara morning-glory	*Calystegia sepium* ssp. b*inghamiae*	1A	CNDDB 2008
Short-seeded waterwort	*Elatine brachysperma*	LC	GSMC 2008
Silverscale	*Atriplex argentua* var. *mohavensis*	LR	GSMC 2008
Slim aster	*Aster subulatus* var. *ligulatus (A. exilis)*	LR	GSMC 2008
Small-fruited bulrush	*Scirpus microcarpus*	LC	GSMC 2008
Sonoran maiden fern	*Thelypteris puberula* var. *sonorensis*	2.2	CNDDB 2008
Southern tarplant	*Hemizonia parryi ssp. australis*	1B.1	CNDDB 2008, EIP 2004, GSMC 2008
Three-square	*Scirpus americanus*	LC	GSMC 2008
Ventura salt marsh milkvetch	*Astragalus pycnostachys* var. *lanosissimus*	FE, SE, 1B	EIP 2004
Water pygmy weed	*Crassula aquatica*	LC	GSMC 2008
Western marsh rosemary	*Limonium californicaum*	LC	GSMC 2008
Wooly seablite	*Suaeda taxifolia*	4	EIP 2004, GSMC 2008
Yerba mansa	*Anemopsis californica*	LC	GSMC 2008

Source: CNDDB 2008
Status, CNPS List:
1A – Presumed extinct in California.
1B.1 – Plants that are seriously endangered in California, and rare, threatened, or endangered elsewhere.
1B.2 – Plants that are fairly endangered in California, and rare or endangered elsewhere.
2.2 – Plants are fairly endangered in California, but more common elsewhere.
4 – Plants about which more information is needed to determine their status and plants of limited distribution.
Staus, Local:
LC – Local Species of Concern
LR – Locally rare
Status, State:
SE – State Endangered
Status, Federal:
FE – Federally Endangered

Table 4D-3
Sensitive Communities Known to Occur within 5 Miles of the Proposed Project Site

Plant Community	Ranking
Southern coastal salt marsh	G2, S2.1

Note: Plant communities with a global and state rank are considered sensitive habitat.
Ranking:
G2 – 6 to 20 element occurrences or 2,000 to 10,000 acres.
S2.1 – very threatened, 6 to 20 element occurrences or 3,000 individuals or 2,000 to 10,000 acres
Source: CNDDB 2008

b. Less-Than-Significant with Mitigation Incorporated. The Proposed Project would have a less than significant impact on any special-status species in local or regional plans, policies, or regulations, or by the CDFG or USFWS. The Proposed Project site is currently developed with paved areas, buildings, and concrete structures. No natural habitats remain on the project site (Tetra Tech 2008). Tables 4D-1, 4D-2, and 4D-3 list the special-status wildlife and plant species and sensitive plant communities that have been recorded within 5 miles of the Proposed Project site. Given the developed nature of the Proposed Project site, special-status plant species and/or sensitive plant communities are highly unlikely to occur within the site.

The federal Migratory Bird Treaty Act and California Fish and Game Code protects native nesting birds including their nests, eggs, and young, under the authority of the USFWS and CDFG. Numerous species of birds use the stabilization basins and surrounding areas on the eastern portion of the property as a resting site. Several species of shorebirds occur from mid-summer through fall. At the height of their migration south in late summer, the following species have been observed: western, least, Baird's, pectoral, and semi-palmated sandpipers. Numerous black-necked stilts also occur. Black-headed gulls, curlew sandpiper, buff-breasted sandpiper, yellow-green vireo, and the County's first sedge wren have been found in the adjacent marsh. Numbers of waterfowl also frequent the ponds nearly year-round, including the blue-winged teal, wood duck, and fulvous whistling-duck. The Proposed Project would involve construction in areas around the stabilization basins. Any nesting birds in these areas would be indirectly affected during construction. Noise generated during construction could cause adults to abandon the nests. Without mitigation, impacts would be significant. However, the mitigation measure described below is required to reduce impacts to nesting birds to less than significant.

Mitigation Measure BIO-1. If ground-disturbing activities are planned in the nesting season (February 15 to September 1), preconstruction surveys for nesting birds must be conducted by a qualified biologist prior to construction within 14 days of any proposed ground disturbance. If nesting birds are found during the survey, construction cannot commence within 500 feet of the nest(s) during the nesting season or until a qualified biologist determines that the nest(s) is inactive.

c,d,f. Less-Than-Significant Impact.

The Proposed Project would not have a direct effect on any riparian habitat or other sensitive natural community identified in local or regional plans, policies, and regulations or by the CDFG or USFWS. The Proposed Project site is currently developed and does not contain natural habitats as designated by the CDFG and USFWS (Tetra Tech 2008). No Wild and Scenic Rivers occur on or near the Proposed Project site.

The Proposed Project would not have a direct effect on federally protected wetlands or waters of the United States as defined by Section 404 of the Clean Water Act (including, but not limited to, marshes, vernal pool habitat etc.) through direct removal, filling, hydrological interruption, or other means. The Proposed Project site contains three solids stabilization basins which hold water year round. These basins are man-made and lined with an impervious surface and do not support hydrophytic vegetation, therefore they are not defined as a jurisdictional wetland or waterbody (Tetra Tech 2008).

San Pedro Creek is located adjacent to the GSD facility to the east, however, storm water runoff off the GSD facility does not reach the creek because it is routed to the existing solids stabilization basins. Wetlands occur off-site, adjacent to the northwestern area of the GSD. This area is protected under Section 404 of the Clean Water Act and the policies of the California Coastal Act and the County's Local Coastal Plan and Goleta Community Plan. This area could be indirectly impacted by on-site activities. For example, increased sedimentation of storm water runoff could occur during construction of the proposed project. Although storm water runoff from the construction areas associated with the Proposed Project is routed to the existing solids stabilization basins, there is a chance that runoff could be diverted to the wetlands located to the northeast of the GSD facility during a big storm event (if the valve to Discharge Point #4 is switched to route storm water to this area – see Section 3.8). However, the use of BMPs during construction as stipulated in the Proposed Project description (see Section 2.5) would minimize these indirect impacts to the adjacent wetlands to a less than significant level.

The County of Santa Barbara has deciduous oak tree protection and regeneration guidelines (Santa Barbara County 2003). The GSD contains native and non-native mature trees. However, the proposed project would not remove any mature trees. Therefore, the Proposed Project would not conflict with any local policies, ordinances, or adopted conservation plans protecting these resources.

e. Less-Than-Significant Impact. Implementation of the Proposed Project would not interfere with the movement of any native resident or migratory fish or wildlife species or with established native resident or migratory wildlife corridors, or impede the use of native wildlife nursery sites. Numerous species of birds use the stabilization basins and surrounding areas on the eastern portion of the property as a resting site, including migratory birds. However, GSD is not used as a wildlife movement corridor or nursery site. Nearby construction would disrupt bird species using these basins, however, impacts would be temporary, and due to the other available nearby habitats, it is anticipated that birds would temporarily relocate during construction. Therefore, a less than significant impact would occur.

g. No Impact. The Proposed Project site is not located within an adopted Habitat Conservation Plan, Natural Community Conservation Plan, or similar plan. As such, no impact would occur.

Further Study Required: No further study of biological resources is required.

4E. Cultural Resources

Would the project:

	Potentially Significant Impact	*Less Than Significant with Mitigation Incorporation*	*Less Than Significant Impact*	*No Impact*
a. Cause a substantial adverse change in the significance of a historical resource as defined in §15064.5 of the CEQA Guidelines?	☐	☒	☐	☐
b. Cause a substantial adverse change in the significance of an archaeological resource pursuant to §15064.5 of the CEQA Guidelines?	☐	☒	☐	☐
c. Directly or indirectly destroy a unique paleontological resource or site or unique geologic feature?	☐	☐	☒	☐
d. Disturb any human remains, including those interred outside of formal cemeteries?	☐	☒	☐	☐

Explanation

a,b,d. Less-Than-Significant Impact with Mitigation Incorporated.

Given the sensitivity of recorded archaeological deposits within the GSD WWTP facility, an Extended Phase 1 archaeological investigation was conducted for the Proposed Project in February 2009 by Dudek using 2-inch diameter, solid core geoprobes distributed throughout areas of proposed ground disturbances within the intact portion of CA-SBA-46 (Dudek 2009). The Extended Phase 1 archaeological investigation accomplished two major goals: (1) to determine the horizontal and vertical presence/absence of prehistoric archaeological materials within the impact areas of the Proposed Project; and (2) to determine the potential integrity (extent of previous disturbances) of any subsurface archaeological materials.

A proposed Extended Phase 1 investigation work plan was circulated on January 23, 2009 to Chumash Native American descendants identified by the California Native American Heritage Commission (NAHC) (Katy Sanchez, NAHC, 4/17/08, see Appendix B) as having knowledge of prehistoric resources of heritage value, as well as to Santa Barbara County Planning and Development Department. In addition, a meeting/site visit was held at the GSD WWTP on February 3, 2009 to review the Proposed Project area and discuss any comments on the Extended Phase 1 investigation work plan. Attendees included: Chumash Charles and Susie Ruiz-Parra, Freddie Romero (Santa Ynez Tribal Elders Council representative), and Frank Arredondo; GSD staff; and project archaeologists. Chumash attendees indicated the need to avoid ground disturbances within CA-SBA-46, the ethnohistoric village of *Helo',* regardless of whether the site soils have been previously disturbed. Chumash consider that intact and disturbed archaeological resources both represent sensitive heritage resources; therefore, any disturbed archaeological deposits within the WWTP site may contain important heritage resources, as well as isolated human remains. The Chumash generally agreed with the Extended Phase 1 methodology proposed, but requested that any artifacts collected during the fieldwork be properly curated in a professional archaeological facility. The Chumash stated that Native American monitoring needs to occur

during all ground disturbing activities within the CA-SBA-46 boundary, regardless of whether the archaeological deposit is intact or disturbed, to ensure that any features or human remains and related artifacts are properly assessed and treated. The Phase I investigation work plan was also reviewed and approved by Madeleine Hirn, State Water Resources Control Board Cultural Resources Officer. No comments were received from Santa Barbara County Planning and Development. The Extended Phase 1 investigation was undertaken consistent with County of Santa Barbara Cultural Resource Guidelines (revised January 1993).

Excavation of 34 geoprobes in Area 2 of the proposed project (see Figure 2-3) identified generally intact soils, though some top soils appeared to have been removed during previous grading. Locations of the proposed Biofilter No. 2 and connecting pipelines west of the existing Biofilter No. 1 contained very low or no cultural materials. Slightly higher densities of cultural materials were identified in the proposed connecting pipelines running from Biofilter No. 2 north of the existing Biofilter No. 1 to the activated sludge treatment system (Area 1) (Figure 2-3). Locations of originally proposed Dissolved Air Flotation Thickeners (DAFTs) and connecting pipelines east of the existing Biofilter No. 1 contained relatively high density and diverse cultural materials including shellfish, animal bone fragments, and fish scales. These Extended Phase 1 geoprobe results were consistent with the Phase 2 significance assessment completed by SRS (SRS 1985a-e) and Phase 3 data recovery mitigation excavations completed by Gamble (1990) for previous WWTP improvements. The Extended Phase 1 Investigation report has been reviewed and approved by the State Water Resources Control Board (personal communication, Madeleine Hirn, April 13, 2009).

In order to minimize potential impacts on intact CA-SBA-46 resources, the project description for the proposed WWTP upgrades has been revised to eliminate all ground disturbances within areas where Extended Phase 1 archaeological investigations recovered higher densities and a diversity of prehistoric artifacts. The only proposed facility components requiring new excavations within the CA-SBA-46 landform included: (1) Biofilter No. 2 located west of existing Biofilter No. 1; and (2) the portion of the new pipeline running from Biofilter No. 2 to the activated sludge treatment system located west of Biofilter No. 1, would be located in an area where very low or no cultural materials were recovered during Extended Phase 1 excavations. All other proposed facilities would not have a potential for significantly affecting CA-SBA-46 resources, as they would be located either: (1) on existing concrete pads, (2) entirely above ground; (3) in areas of the GSD WWTP that were outside of the original CA-SBA-46 landform and have been extensively filled; or (4) in areas previously graded in the past 50 years such that no archaeological soils remain. All ground disturbances associated with proposed pipelines connecting new WWTP upgraded facilities would avoid the potential for substantial impacts on CA-SBA-46 resources by their location either: (1) in areas where very low or no cultural materials were recovered during Extended Phase 1 excavations west of existing Biofilter No. 1; or (2) in corridors containing abandoned pipelines; such that the existing pipes can be feasibly removed and replaced without the need to expand existing trench corridor widths.

The project redesign components described above would avoid the potential for disturbing areas of CA-SBA-46 with substantial densities and diversity of cultural resources identified during the current Extended Phase 1 archaeological investigation, as well as previous Phase 2 significance assessment and Phase 3 data recovery mitigation excavations completed in the 1980s/1990. Nevertheless, there remains the possibility of encountering unexpected concentrations of cultural remains within areas of very low or no cultural materials, or encountering isolated artifacts or human remains within previously disturbed existing pipeline corridors, whereby impacts would be significant. However, with incorporation of mitigation measures CULT-1 through CULT-5 below, residual impacts on archaeological resources would be less than significant.

A follow-up meeting was held at the GSD WWTP on May 13, 2009 to discuss any comments on the Draft Extended Phase 1 investigation report conclusions and proposed redesign to avoid sensitive archaeological deposits. Attendees included: Freddie Romero (Santa Ynez Tribal Elders Council representative); Joyce Gerber, County of Santa Barbara archaeologist; and project archaeologists. The proposed redesign was considered by all parties in attendance to effectively minimize the potential for significant impacts on cultural resources, given the fact that proposed revised project soil disturbances would occur either in areas of very low to no cultural deposits, or in previously disturbed pipeline corridors. The potential for encountering unknown pockets of artifact concentrations was considered by Mr. Romero and Ms. Gerber to be effectively mitigated by the mitigations identified below. No other written comments from the Native Americans consulted on the Draft Extended Phase 1 investigation report conclusions were received.

Mitigation Measure CULT-1. All proposed ground disturbances within the original CA-SBA-46 landform (Area 2 of the Proposed Project) shall be monitored by a qualified archaeologist and Chumash representative. In the event that unexpected concentrations of artifacts are encountered during grading in areas west of existing Biofilter No. 1, excavations shall be temporarily redirected outside of that area until the concentration can be adequately characterized, and if necessary, mitigated, consistent with County of Santa Barbara Cultural Resources Guidelines. This shall include curation of all artifacts recovered at the University of California, Santa Barbara. The Chumash observer shall report to all interested local Chumash individuals during monitoring activities undertaken, and include comments and concerns on any archaeological excavations required.

Mitigation Measure CULT-2. Any important isolated artifacts (such as diagnostic tools associated with a particular time period of occupation) identified within previously disturbed pipeline corridors shall be recovered and curated at the University of California, Santa Barbara.

Mitigation Measure CULT-3. A short pre-construction workshop shall be conducted by a qualified archaeologist and a local Chumash Native American observer. Attendees shall include construction supervisors and equipment operators. The workshop shall:

a) Review the types of archaeological artifacts that may be found during construction of the Proposed Project;

b) Provide examples of common archaeological artifacts to examine; and

c) Discuss prohibited activities, including unauthorized collecting of artifacts.

Mitigation Measure CULT-4. If export of soil is required as a result of project grading, the soil export receiving site location shall be documented in a letter and Department of Parks and Recreation Archaeological Site Record form prepared by a qualified archaeologist. The letter and site record form shall describe the origin of the soils, their association with CA-SBA-46, and their deposited location on an USGS quadrangle map.

Mitigation Measure CULT-5. All human remains and associated burial-related artifacts, if encountered, shall be treated pursuant to California Public Resources Code 5097.98.

c. Less-Than-Significant Impact. A request for a records search and literature review for paleontological resources at the project site was made of the Paleontological Department at the San Bernardino County Museum (SBCM) in Redlands, California. The results of the records search and literature review are contained in Appendix B. Results of the records and literature search state that "Previous geologic mapping…indicates that the proposed study area is located entirely upon surface alluvium of Holocene or recent age (unit = Qal). These Holocene sediments have low potential to contain significant fossils, and so are assigned low paleontologic sensitivity."

Due to results from geotechnical investigations of the site (see Section 3.6), it is confirmed that excavation below Holocene sediments would not be necessary. Therefore, impacts on paleontologic resources would be less than significant.

4F. Geology and Soils

Would the project:

	Potentially Significant Impact	*Less Than Significant with Mitigation Incorporation*	*Less Than Significant Impact*	*No Impact*
a. Expose people or structures to potential substantial adverse effects, including the risk of loss, injury, or death involving:				
i. Rupture of a known earthquake fault, as delineated on the most recent Alquist-Priolo Earthquake Fault Zoning Map issued by the State Geologist for the area or based on other substantial evidence of a known fault?	☐	☐	☒	☐
ii. Strong seismic ground shaking?	☐	☐	☒	☐
iii. Seismic-related ground failure, including liquefaction?	☐	☐	☒	☐
iv. Landslides?	☐	☐	☐	☒
b. Result in substantial soil erosion or the loss of topsoil?	☐	☐	☒	☐
c. Be located on a geologic unit or soil that is unstable, or that would become unstable as a result of the project, and potentially result in on- or off-site landslide, lateral spreading, subsidence, liquefaction or collapse?	☐	☐	☒	☐
d. Be located on expansive soil, as defined in Section 1802.3.2 of the 2007 California Building Code (Title 24), creating substantial risks to life or property?	☐	☐	☒	☐
e. Have soils incapable of adequately supporting the use of septic tanks or alternative wastewater disposal systems where sewers are not available for the disposal of wastewater?	☐	☐	☐	☒

Explanation

a(i) Less-Than-Significant Impact. The Proposed Project site is located in the More Ranch Fault Zone, however, the Proposed Project site is not located within an APEFZ (CDCDMG 2000) and the results of the fault investigation performed for the Proposed Project (see Section 3.6.5.2) reveal no evidence indicative of faulting, such as offset bedding, gouge zones or slickensided fractures at or near the Proposed Project site (Tetra Tech 2009b). Therefore, the proposed structures for the project are not located on or within 50 feet of a known active or potentially active fault trace and the potential hazard posed by surface fault rupture for structures planned for Proposed Project is minimal and less than significant.

a(ii) Less-Than-Significant Impact. Ground shaking caused by events on distant or nearby active faults is considered a potential hazard at the site. A review of published geologic maps, seismic hazard information (SSC 2003), and the data presented in the Geohazard Assessment/**Soil Engineering Report** ~~Geotechnical Soil Investigation~~ (Tetra Tech 2009a) for the Proposed Project indicates that the site is located within an area potentially subject to strong ground shaking. However, new proposed structures would be constructed following the design standards recommended in the Geohazard Assessment/**Soil Engineering Report** ~~Geotechnical Soil Investigation~~ pursuant to Title 24 of the 2007 California Building Code to mitigate potential hazards to proposed project structure foundations posed by seismically induced strong ground motion. Incorporation of the recommendations of the geotechnical investigation into the design of structures and equipment for the Proposed Project would minimize the risk of potential damage including the risk of loss, injury, or death involving strong ground shaking. Therefore, impacts would be reduced to a less than significant level.

a(iii),c. Less-Than-Significant Impact. Santa Barbara County's Safety Element indicates that the Proposed Project site is in an area with a moderate potential for problems associated with liquefaction and results of a site-specific investigation of liquefaction potential indicates that Area 1 has the potential for liquefaction (there does not appear to be any potential for liquefaction in Areas 2, 3, and 4 due to the lack of significant groundwater and the presence of shallow siltstone) (Tetra Tech 2009a). However, dynamic settlement and localized loss of soil bearing is not anticipated to affect above grade structures and surface improvements due to the depth of the overlying non-liquefiable soil layer with respect to the combined thicknesses of the underlying discontinuous liquefiable soil layers (ESP 2009 and Tetra Tech 2009a). In addition, the design recommendations of the geotechnical investigation conducted for the Proposed Project would be implemented which would minimize the risk of potential damage as a result of lateral spreading, subsidence, liquefaction, or collapse. Therefore, impacts would be reduced to a less than significant level.

a(iv) No Impact. The Proposed Project site is located on flat terrain away from significant slopes. On the basis of data in geologic maps of the site area and an evaluation of the site and vicinity made during a reconnaissance by Tetra Tech in December 2008, the site and adjacent properties are not located in an area with the potential for significant ground failure due to landslides. Santa Barbara County's Safety Element indicates that the Proposed Project site is located in an area with a low problem rating for landslide hazards (County of Santa Barbara 1979, updated 1991). Therefore, landslides are not anticipated at the Proposed Project site.

b. Less-Than-Significant Impact. Long-term erosion at the project site is unlikely due to the gentle slope of site topography. Furthermore, soil information available from the U.S. Department of Agriculture (USDA), Soil Conservation Service indicates that soil types mapped at the site have low erosion potential (USDA 1981). However, construction of the Proposed Project would result in ground surface disruption during excavation, grading, and trenching that would create the potential for erosion to occur. Implementation of erosion control measures listed in Section 2.5 of the proposed project description, however, would reduce construction impacts to a less than significant level.

d. Less-Than-Significant Impact. Expansive soil is defined as soil that expands to a significant degree upon wetting and shrinks upon drying. Generally, expansive soils contain a high percentage of clay. The Soil Conservation Service mapped the northern portion of the Proposed Project Site (Area 1) as Camarillo-Aquents (CA) and association of the Camarillo and Aquents soils. The Camarillo soils are described as loam, sandy loam, and clay loam that have shrink-swell properties that increase with depth, with high shrink-swell potential at depths of 35 to 72 inches (USDA 1981).

Santa Barbara County's Safety Element presents an evaluation of expansive soil potential for Santa Barbara County based on information from the Soil Conservation Service. The Safety Element indicates that the Proposed Project site is in a low problem area rating for expansive soils (County of Santa Barbara 1979, updated 1991). An expansion index test performed on a bulk soil sample of the upper clay soils in Area 1 produced an expansion index value of 76, in the medium expansion category (Tetra Tech 2009a). Due to the medium expansion potential of soils onsite, impacts would be potentially significant. However, recommendations of the Geohazard Assessment/**Soil Engineering Report** ~~Geotechnical Soil Investigation~~ (Tetra Tech 2009a) would be incorporated into the design of the Proposed Project which would minimize the risk of potential damage as a result of expansive soil conditions. Therefore, impacts would be reduced to a less than significant level.

e. No Impact. The Proposed Project is an enhancement of the currently operating municipal sewer wastewater system. Therefore, no impact would result with regard to the capability of soils to adequately support the use of septic tanks or alternative wastewater disposal systems. No further study of this issue is required.

Further Study Required: No further study is required

4G. Hazards/Hazardous Materials

Would the project:

	Potentially Significant Impact	*Less Than Significant with Mitigation Incorporation*	*Less Than Significant Impact*	*No Impact*
a. Create a significant hazard to the public or the environment through the routine transport, use, or disposal of hazardous materials?	☐	☐	☒	☐
b. Create a significant hazard to the public or the environment through reasonably foreseeable upset and accident conditions involving the release of hazardous materials into the environment?	☐	☐	☒	☐
c. Emit hazardous emissions or handle hazardous or acutely hazardous materials, substances, or waste within one-quarter mile of an existing or proposed school?	☐	☐	☐	☒
d. Be located on a site which is included on a list of hazardous materials sites compiled pursuant to Government Code Section 65962.5 and, as a result, would it create a significant hazard to the public or the environment?	☐	☐	☐	☒
e. For a project located within an airport land use plan or, where such a plan has not been adopted, within two miles of a public airport or public use airport, would the project result in a safety hazard for people residing or working in the project area?	☐	☐	☒	☐
f. For a project within the vicinity of a private airstrip, would the project result in a safety hazard for people residing or working in the project area?	☐	☐	☐	☒
g. Impair implementation of or physically interfere with an adopted emergency response plan or emergency evacuation plan?	☐	☐	☒	☐
h. Expose people or structures to a significant risk of loss, injury, or death involving wildland fires, including where wildlands are adjacent to urbanized areas or where residences are intermixed with wildlands?	☐	☐	☐	☒

Explanation

a. Less-Than-Significant Impact. Operation of the Proposed Project would involve transport, storage, use, and disposal of hazardous materials. Wastewater treatment operations by intention typically involve the use of hazardous materials during routine operations for disinfectant and treatment of wastewater and during routine facility maintenance for painting and diesel powered equipment maintenance. Many of the materials used in routine operation at the Proposed Project site are considered hazardous and while many are stored and used in significant quantity on a daily basis, use of, and access to these materials is strictly controlled through implementation of the Goleta Sanitary District's Hazardous Materials Business Plan (GSD 2008). Furthermore, materials used for painting and equipment repair activities generally are maintained at the Proposed Project site in limited quantities and stored and handled following manufacture and regulatory agency guidelines for safety. In addition, with the improvements to the treatment plant, the use of some hazardous materials would decrease (i.e., sodium hypochlorite and sodium bisulfite). Therefore, operational impacts would be less than significant.

Construction activities for the Proposed Project would be short-term and one-time in nature, and would involve the limited transport, storage, use, or disposal of hazardous materials. Some examples of hazardous materials handling include fueling and servicing construction equipment on-site, and the transport of fuels, lubricating fluids, and solvents. These types of materials, however, are not acutely hazardous, and all storage, handling, and disposal of these materials are regulated by the Department of Toxic Substances Control (DTSC), the U.S. EPA, the Occupational Safety & Health Administration (OSHA), and the Santa Barbara County Fire Department. Therefore, construction impacts would be less than significant.

b. Less-Than-Significant Impact. Implementation of the Proposed Project could create a significant hazard to the public or the environment through reasonably foreseeable upset and accident conditions involving the release of hazardous materials into the environment. Routine operations at the Proposed Project site will include use and storage of wastewater treatment chemicals such as sodium hypochlorite and sodium bisulfite that are transported to the site in bulk quantities and stored for daily use. Operations at the site are also expected to generate flammable and toxic gases methane and hydrogen sulfide. As such, there are reasonably foreseeable upset or accident conditions that could create a significant hazard to the public and/or on-site personnel due to the release of these hazardous materials. However, the GSD's Hazardous Materials Business Plan (GSD 2008) and Emergency Response Plan (GSD 2007) already contain provisions to store and handle hazardous chemicals and manage flammable and toxic gases produced by treatment processes (methane and hydrogen sulfide) including lock-out/tag-out procedures on critical control systems, leak detection, air quality monitoring, and fugitive gas collection and destruction. While the GSD's Hazardous Materials Business Plan and Emergency Response Plan are updated annually and would need to be revised to include the new equipment that would be added under the proposed project, the plant's hazardous materials management and emergency response procedures would remain the same. Specifically, no new hazardous materials would be used under the proposed project and the volume of hazardous materials proposed to be used would not increase; the use of some hazardous materials would be reduced under the proposed project (i.e., sodium hypochlorite). Therefore, impacts would be less than significant.

c. No Impact. There is no impact related to the potential for the Proposed Project to emit hazardous emissions or handle hazardous or acutely hazardous materials, substances, or waste within 0.25 mile of an existing or proposed school, as no public schools are located or proposed for construction within 0.25 mile of the Proposed Project Site. No further study of this issue is required.

d. No Impact. The Proposed Project site is not included on the 'Cortese' list of hazardous materials sites compiled pursuant to Government Code Section 65962.5. Tetra Tech retained the services of Environmental Data Resources (EDR), a Connecticut-based company that maintains comprehensive environmental information databases and specializes in providing such data for use in real estate and environmental documents, such as this Mitigated Negative Declaration. EDR's Radius Report database search included information regarding the site and properties within a specified search radius of the site, which may be under regulatory scrutiny for environmental issues. While the Radius Report identified records related to the site on several state and federal databases related to environmental compliance tracking, EDR identified no 'Cortese' list database entries associated with the site that might indicate conditions that present a hazard to the public or environment (EDR 2008). No impact would occur. No further study of this issue is required.

e. Less-Than-Significant Impact. The Proposed Project is located within an airport land use plan, resulting in a safety hazard for people residing or working in the project area. The nearest public airport to the Proposed Project is the adjacent Santa Barbara Municipal Airport, located immediately west of Moffett Place, the western boundary to the Proposed Project site. While the airport is located adjacent to the Proposed Project site, the site is not located beneath the approach, departure, or sideline zones of the airport, areas of greatest hazard to people on the ground. Furthermore, as this project is an expansion of the existing facility with only a limited number of additional personnel exposed to the hazard posed by the airport and implementation of the Proposed Project requires no change in zoning for the site; the impact is considered less than significant.

f. No Impact. The project site is not located within two nautical miles of a private airstrip. No private airstrips were identified within two nautical miles of the project site during review of available aerial photographs and maps of the area. Therefore, no impact would occur and no further study of this issue is required.

g. Less-Than-Significant Impact. While the GSD's Hazardous Materials Business Plan and Emergency Response Plan are updated annually and would need to be revised to include the new equipment that would be added under the proposed project, the plant's hazardous materials management and emergency response procedures including evacuation routes and the evacuation plan would remain the same. Specifically, no new hazardous materials would be used under the proposed project and the volume of hazardous materials proposed to be used would not increase; the use of some hazardous materials would be reduced under the proposed project (i.e., sodium hypochlorite). Therefore, impacts would be less than significant.

h. No Impact. The Proposed Project would not expose people or structures to a risk of loss, injury, or death involving wildland fires, including where wildlands are adjacent to urbanized areas or where residences are intermixed with wildlands. The Proposed Project site is located in a partially developed portion of the Goleta Valley. The surrounding area does not contain dense areas of flammable brush, grass, or trees. The site is not near areas containing dense vegetation (flammable brush) considered to be wildlands. Furthermore, the Proposed Project is required to comply with local fire code requirements. Therefore, no impact would occur, and no further study of this issue is required.

Further Study Required: No further study is required

4H. Hydrology and Water Quality

Would the project:

	Potentially Significant Impact	*Less Than Significant with Mitigation Incorporation*	*Less Than Significant Impact*	*No Impact*
a. Violate any water quality standards or waste discharge requirements?	☐	☐	☒	☐
b. Substantially deplete groundwater supplies or interfere with groundwater recharge such that there would be a net deficit in aquifer volume or a lowering of the local groundwater table level (e.g., the production rate of pre-existing nearby wells would drop to a level which would not support existing land uses or planned uses for which permits have been granted)?	☐	☐	☒	☐
c. Substantially alter the existing drainage pattern of the site or area, including through the alteration of the course of a stream or river, in a manner which would result in substantial erosion or siltation on or off site?	☐	☐	☒	☐
d. Substantially alter the existing drainage pattern of the site or area, including through the alteration of the course of a stream or river, or substantially increase the rate or amount of surface runoff in a manner that would result in flooding on or off site?	☐	☐	☒	☐
e. Create or contribute runoff water which would exceed the capacity of existing or planned stormwater drainage systems or provide substantial additional sources of polluted runoff?	☐	☐	☒	☐
f. Otherwise substantially degrade water quality?	☐	☐	☒	☐
g. Place housing within a 100-year flood hazard area as mapped on a federal Flood Hazard Boundary or Flood Insurance Rate Map or other flood hazard delineation map?	☐	☐	☐	☒
h. Place within a 100-year flood hazard area structures that would impede or redirect flood flows?	☐	☐	☒	☐
i. Expose people or structures to a significant risk of loss, injury or death involving flooding, including flooding as a result of the failure of a	☐	☐	☒	☐

	Potentially Significant Impact	*Less Than Significant with Mitigation Incorporation*	*Less Than Significant Impact*	*No Impact*
levee or dam?				
j. Inundation by seiche, tsunami, or mudflow?	☐	☐	☐	☒

Explanation

a,c,d,f. **Less-Than-Significant Impact**. Construction of the Proposed Project would have potentially significant short-term impacts on storm water quality during construction due to the potential to introduce sediment and other pollutants (e.g., oil and grease) into storm water runoff. Because storm water runoff from the site could enter into a wetland located to the northwest of the GSD property under a large storm event (if the valve to Discharge Point No. 4 is turned to route storm water there – see Section 3.8), this could also affect water quality within this wetland. However, the proposed project description includes implementation of a number of construction BMPs to protect storm water quality, including erosion control measures and control measures for proper fueling and maintenance of construction vehicles. With implementation of these measures, impacts would be reduced to less than significant levels.

Operation of the proposed facility is designed to upgrade the existing WWTP to meet more stringent discharge requirements within the NPDES permitting process, therefore, the proposed upgrades would improve the quality of the final effluent from the WWTP. Each of the new project components would be constructed on existing asphalt areas or concrete-lined areas, except for proposed new Biofilter No. 2, which would be installed on open ground. Biofilter No. 2, however, would be a lined but uncovered structure. Several structures to be built on asphalt in Area 1, will also be open tanks, thereby reducing the overall runoff in this area. Therefore, the Proposed Project would not increase the amount of impervious surfaces on the GSD facility and there would be no increase in the volume or velocity of runoff and no anticipated long-term increase in pollutant loads to storm water runoff. Therefore, operation of the Proposed Project would have less than significant impacts on water quality and no further study of this issue is required.

b. Less-Than-Significant Impact. Each of the new project components would be constructed on existing asphalt areas or concrete-lined areas, except for proposed new Biofilter No. 2, which would be installed on open ground. Biofilter No. 2, however, would be a lined but uncovered structure. Therefore, except for Biofilter No. 2, the infiltration of water for groundwater recharge would not change. The size Biofilter No. 2 is not big enough to substantially alter groundwater recharge in the area. Therefore, the Proposed Project would have a less than significant impact on groundwater resources and no further study of this issue is required.

g. No Impact. The Proposed Project does not involve construction of housing. Therefore, there would be no impact.

h,i. Less-Than-Significant Impact. The Proposed Project is officially located in a 100-year flood hazard area according to FEMA. However, no new structures are proposed within the Floodway zone. In addition, each of the new project components would be constructed on existing asphalt areas or concrete-lined areas, except for proposed new Biofilter No. 2, which would be installed on open ground. Biofilter No. 2, however, would be a lined but uncovered structure. Site coverage by the proposed new buildings, basins and tanks would not be significant compared with the coverage of the existing structures located in the overall project area. Therefore, new proposed structures are not anticipated to significantly impede or

redirect flood flows onto or off the project site. New proposed buildings would also be constructed in compliance with Santa Barbara County's Floodplain Ordinance which requires that finished floor elevations of all inhabitable buildings be two feet above base flood levels or that the buildings be flood-proofed two feet above base flood levels. Therefore, impacts would be less than significant.

j. No Impact. Construction and operation of the Proposed Project does not increase the risk of inundation by a tsunami or seiche. As a result, no impact would result.

Further Study Required: No further study regarding impacts to hydrology and water quality is required.

4I. Land Use and Planning

Would the project:

	Potentially Significant Impact	*Less Than Significant with Mitigation Incorporation*	*Less Than Significant Impact*	*No Impact*
a. Physically divide an established community?	☐	☐	☐	☒
b. Conflict with any applicable land use plan, policy, or regulation of an agency with jurisdiction over the project (including, but not limited to the general plan, specific plan, local coastal program, or zoning ordinance) adopted for the purpose of avoiding or mitigating an environmental effect?	☐	☐	☒	☐
c. Conflict with any applicable habitat conservation plan or natural community conservation plan?	☐	☐	☐	☒

Explanation

a. No Impact. The Proposed Project would not divide an established community. The Proposed Project site is developed. The purpose of the Proposed Project is to enhance treatment levels of municipal wastewater at an existing facility. No further study of this issue is required.

b. Less-Than-Significant Impact. The Proposed Project is consistent with the purpose and intent of the Public Utilities zone and land use designation of the County of Santa Barbara and the Proposed Project would be consistent with the development standards of the County's Coastal Zoning Ordinance (Article II), including performance standards, height limits, and setbacks. Potentially significant impacts on biological resources, cultural resources, and transportation/circulation would also result in potential inconsistencies with the resource protection policies of the California Coastal Act and County's Coastal Land Use Plan, and Goleta Community Plan. However, with implementation of mitigation measures for each of these issue areas, impacts would be reduced to less than significant levels and therefore the project would be consistent with these policies.

c. No Impact. The Proposed Project would not conflict with any applicable habitat conservation plan or natural community conservation plan. The GSD facility is a highly developed area, and no natural habitats occur.

Further Study Required: Further evaluation of the land use impacts is not required.

4J. Mineral Resources

Would the project:

	Potentially Significant Impact	*Less Than Significant with Mitigation Incorporation*	*Less Than Significant Impact*	*No Impact*
a. Result in the loss of availability of a known mineral resource that would be of value to the region and the residents of the state?	☐	☐	☐	☒
b. Result in the loss of availability of a locally important mineral resource recovery site delineated on a local general plan, specific plan or other land use plan?	☐	☐	☐	☒

Explanation

a. No Impact. The Proposed Project would not result in the loss of availability of a known mineral resource that would be of value to the region and the residents of the state. The Proposed Project site is located on the La Goleta Gas Field, with the nearest natural gas production well located on the parcel of property immediately adjacent to the south side of the GSD (California Department of Conservation 2008). However, the operations of the current GSD do not result in the loss of this resource.

b. No Impact. Implementation of the Proposed Project is not anticipated to result in the loss of availability of a locally important mineral resource recovery site delineated on a local general plan, specific plan, or other land use plan. While the Proposed Project is located within a mineral resource zone, the La Goleta Gas Field, the proposed project is unlikely to limit access to this resource. As a result, the Proposed Project would not have an impact associated with a locally important mineral resource.

Further Study Required: No further study of mineral resources is required.

4K. Noise

Sound is caused by vibrations that generate waves of minute air pressure fluctuations in the air. Air pressure fluctuations that occur from 20 to 20,000 times per second can be detected as audible sound. The number of pressure fluctuations per second is normally reported as cycles per second or Hertz (Hz). Different vibrational frequencies produce different tonal qualities for the resulting sound. Sound level data is typically presented in terms of dB values. Decibel scales are a logarithmic index based on ratios between a measured value and a reference value. In the field of atmospheric acoustics, decibel scales are based on ratios of the actual pressure fluctuations generated by sound waves compared to a standard reference pressure value. Human hearing varies in sensitivity for different sound frequencies. Several different frequency weighting schemes have been developed to approximate the way the human ear responds to noise levels or to account for the response of building materials to airborne vibrations and sound. The "A-weighted" decibel scale (dBA) is normally used to approximate human hearing response to sound.

Varying noise levels are often described in terms of the equivalent constant decibel level. Equivalent noise levels (Leq) are used to develop single-value descriptions of average noise exposure over various periods of time. Such average noise exposure ratings often include additional weighting factors for annoyance potential due to time of day or other considerations. The Leq data used for these average noise exposure descriptors are generally based on A-weighted sound level measurements, although other weighting systems are used for special conditions (such as blasting noise).

Average noise exposure over a 24-hour period is often presented as a community noise equivalent level (CNEL). CNEL values are calculated from hourly Leq values, with the Leq values for the evening period (7 p.m. to 10 p.m.) increased by 5 decibels and the Leq values for the nighttime period (10 p.m. to 7 a.m.) increased by 10 dB to reflect the greater disturbance potential from evening and nighttime noises.

Santa Barbara County has adopted a CNEL of 65 dBA as the land use compatibility limit for noise-sensitive land uses. Noise-sensitive land uses include single and multifamily residential, mobile homes, dormitories, hotels, motels, hospitals, nursing and convalescent homes, public and private schools, libraries, churches, and places of public assembly.

The GSD is located adjacent to the Santa Barbara Municipal Airport, south of the main east-west runway and east of the north-south runways. Airport noise contour maps in the Santa Barbara County Airport Land Use Plan and the Goleta Community Plan indicate that the northern portion of the GSD site is within the 65 dB CNEL contour of the airport. The location of airport noise contours may have changed slightly since preparation of those airport noise contour maps due to changes in annual flight operation levels and changes in the aircraft types operated by commercial airlines.

The closest residential development to the GSD property is a small number of residences in the industrial zoned area located 500 feet directly east of the GSD facility. In addition, the Rancho Goleta mobile home park is located on the east side of Highway 217, with the closest residential mobile homes located approximately 1,530 feet from the eastern boundary of the GSD site.

Ambient noise monitoring was conducted at the GSD site between April 08, 2008 and April 15, 2008. Two Type 2 (general purpose) data logging sound level meters were used for the noise monitoring study. Two locations were monitored for 24-hour periods, one location in the undeveloped northern portion of the GSD property and one location within the currently developed treatment plant portion of the property. Site 1, in the undeveloped portion of the GSD property, was located at about the same distance from the

main runway flight track as is the north side of the Rancho Goleta mobile home park and is located close to the northeast boundary of the GSD facility. Site 2, in an open area west of Biofilter No. 1, was used for two 24-hour measurement episodes. The 24-hour monitoring at site 2 was repeated on April 14-15, 2008 to determine if strong winds during the April 08-09, 2008 monitoring at that location had an undue influence on measured noise levels. Comparisons between data from the two monitoring episodes at Site 2 indicate that wind conditions had only a minimal influence on the measured noise levels. Four additional locations in the developed treatment plant portion of the property (Sites 3, 4, 5, and 6) were monitored for periods of approximately 0.5 hour each to collect additional data on typical facility equipment noise levels, especially along the eastern side of the facility closest to the Rancho Goleta mobile home park. Table 4K-1 summarizes noise monitoring data from the GSD site. Additional data from the noise study is provided in Appendix C.

Table 4K-1
Summary of Noise Monitoring Data at GSD Site

Site	Date	Start Time	Stop Time	Duration	CNEL	1-Hour Leq Values, dBA			1-Minute Leq Values, dBA		
						Min.	Max.	Avg.	Min.	Max.	Avg.
1	April 07-08, 2008	10:44 am	12:50 pm	26.11 hrs	58.2	42.8	63.5	57.2	38.0	76.5	57.2
2	April 08-09, 2008	9:27 am	9:53 am	24.43 hrs	64.9	55.6	62.9	59.3	48.7	72.8	59.3
2	April 14-15, 2008	2:24 pm	3:22 pm	24.97 hrs	62.3	53.8	62.8	57.7	48.8	71.8	57.7
3	April 10, 2008	2:51 pm	3:23 pm	32.18 mins	NA	NA	NA	NA	50.4	74.5	67.5
4	April 10, 2008	2:56 pm	3:27 pm	31.25 mins	NA	NA	NA	NA	55.7	66.9	64.7
5	April 10, 2008	3:30 pm	4:04 pm	34.07 mins	NA	NA	NA	NA	61.3	62.4	61.8
6	April 10, 2008	3:36 pm	4:09 pm	32.33 mins	NA	NA	NA	NA	59.1	64.5	60.7

Notes:

CNEL = community noise exposure level, a 24-hour value with penalty factors applied to evening and nighttime noise levels.
dBA = A-Weighted Sound Pressure Level (decibel)
Leq = equivalent average noise level
NA = not applicable
Site 1 = 375 feet north of the northern solids stabilization basin, 150 feet west of San Pedro Creek, 150 feet south of Fowler Road
Site 2 = 94 feet west of trickling filter, 112 feet north of northeast corner of power and maintenance building
Site 3 = 150 feet west of northern solids stabilization basin, 225 feet north of secondary sedimentation tanks
Site 4 = 19 feet west of northwest corner of middle solids stabilization basin, 131 feet northeast of trickling filter

Site 5 = 94 feet west of berm separating middle and south solids stabilization basins, 38 feet northeast of eastern primary sedimentation tank
Site 6 = 47 feet south of power and maintenance building, 112 feet west-southwest of large anaerobic digester
Data collected using Center Technology model 322 Type 2 (general purpose) data logging sound level meters.
Source: Tetra Tech data.

The following chart summarizes expected noise impacts for the proposed project. Each topic in the chart is discussed further below.

	Potentially Significant Impact	*Less Than Significant with Mitigation Incorporation*	*Less Than Significant Impact*	*No Impact*
a. Exposure of persons to or generation of noise levels in excess of standards established in the local general plan or noise ordinance, or applicable standards of other agencies?	☐	☐	☒	☐
b. Exposure of persons to or generation of excessive groundborne vibration or groundborne noise levels?	☐	☐	☒	☐
c. A substantial permanent increase in ambient noise levels in the project vicinity above levels existing without the project?	☐	☐	☒	☐
d. A substantial temporary or periodic increase in ambient noise levels in the project vicinity above levels existing without the project?	☐	☐	☒	☐
e. For a project located within an airport land use plan or, where such a plan has not been adopted, within two miles of a public airport or public use airport, would the project expose people residing or working in the project area to excessive noise levels?	☐	☐	☒	☐
f. For a project within the vicinity of a private airstrip, would the project expose people residing or working in the project area to excessive noise levels?	☐	☐	☐	☒

Explanation

a,c,d. Less-Than-Significant. On-site noise levels are dominated by noise from aircraft operations at Santa Barbara Municipal Airport, local highway traffic, and WWTP equipment operations. On-site noise measurements show that existing ambient noise levels at the project site are within land use compatibility guidelines for this type of land use (i.e., less than 65 dB). Noise impacts associated with the Proposed Project would include construction noise and facility operational noise.

Construction Noise Impacts

Construction of the proposed facility improvements would generate noise during the overall construction period. Most construction activity is anticipated to occur between 2010 and 2014, and generally would be limited to daytime periods. The exact sequencing of facility improvements within the overall construction period has not yet been established. Consequently, a somewhat generalized analysis of representative construction phases was conducted to evaluate construction noise impacts. Typical construction equipment expected to be used for the Proposed Project includes dozers, excavators, backhoes, trenchers, wheeled loaders, roller/compactors, mobile cranes, forklifts, skid-steer loaders, aerial lifts, generators, air compressors, pumps, welders, pneumatic tools, dump trucks, flatbed trucks, cement mixer trucks, water trucks, and asphalt paving machines.

Potential construction noise levels were estimated using a spreadsheet model that evaluates noise levels from various combinations of construction equipment. The spreadsheet model incorporates a database of noise levels for a wide variety of motorized equipment and power tools. Some equipment types have multiple entries to reflect a range of typical engine sizes. The model evaluates noise generation by time of day over a typical 24-hour cycle for each phase of construction activity that is evaluated. This allows a direct calculation of expected peak noise levels, average daytime noise levels, and incremental CNEL impacts. Figures 4K-1 through 4K-3 illustrate noise levels at different distances expected from the noisiest phases of construction activity at the project site. Figure 4K-1 illustrates typical noise levels from site preparation and excavation activities. These activities are likely to generate some of the highest noise levels during the overall construction process, and would occur intermittently as construction activities occur at different locations on the project site.

Figure 4K-1
Typical Noise Level From Site Preparation and Excavation Activities

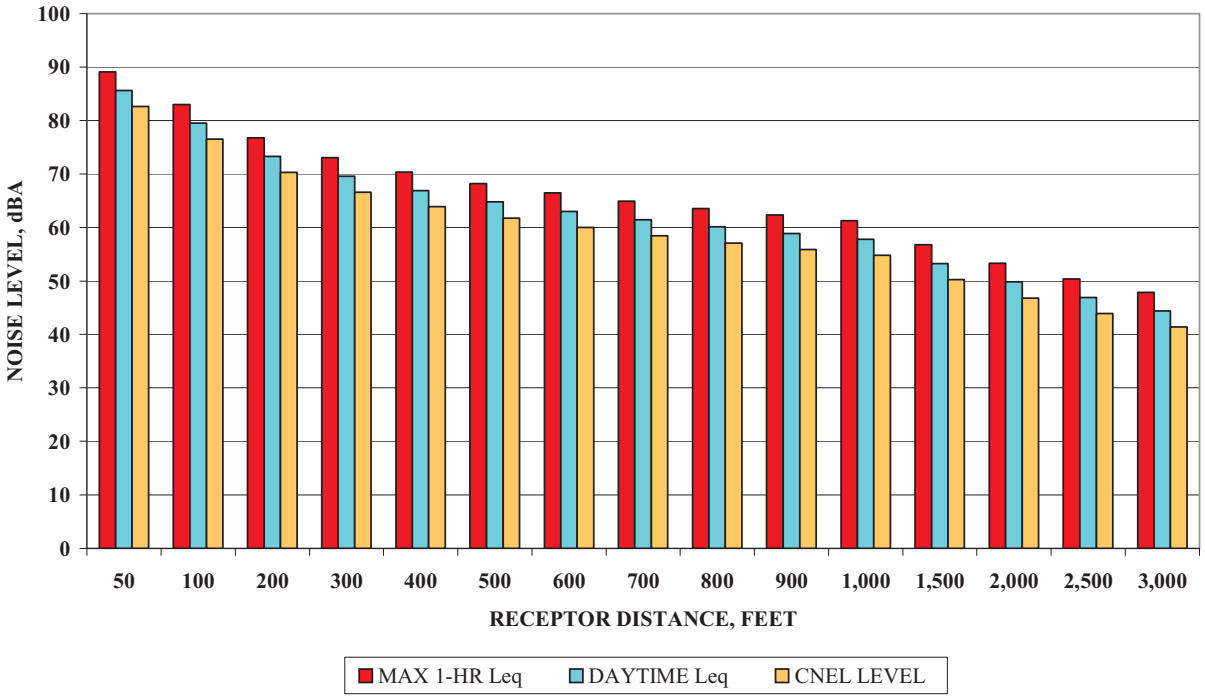

Figure 4K-2 illustrates noise levels from utility installation and installation of facility foundations and pads. Noise levels from this phase of construction activity would be lower than those produced during site preparation and excavation activities.

Figure 4K-2
Typical Noise Level From Utility Installation and Installation of Foundations and Pads

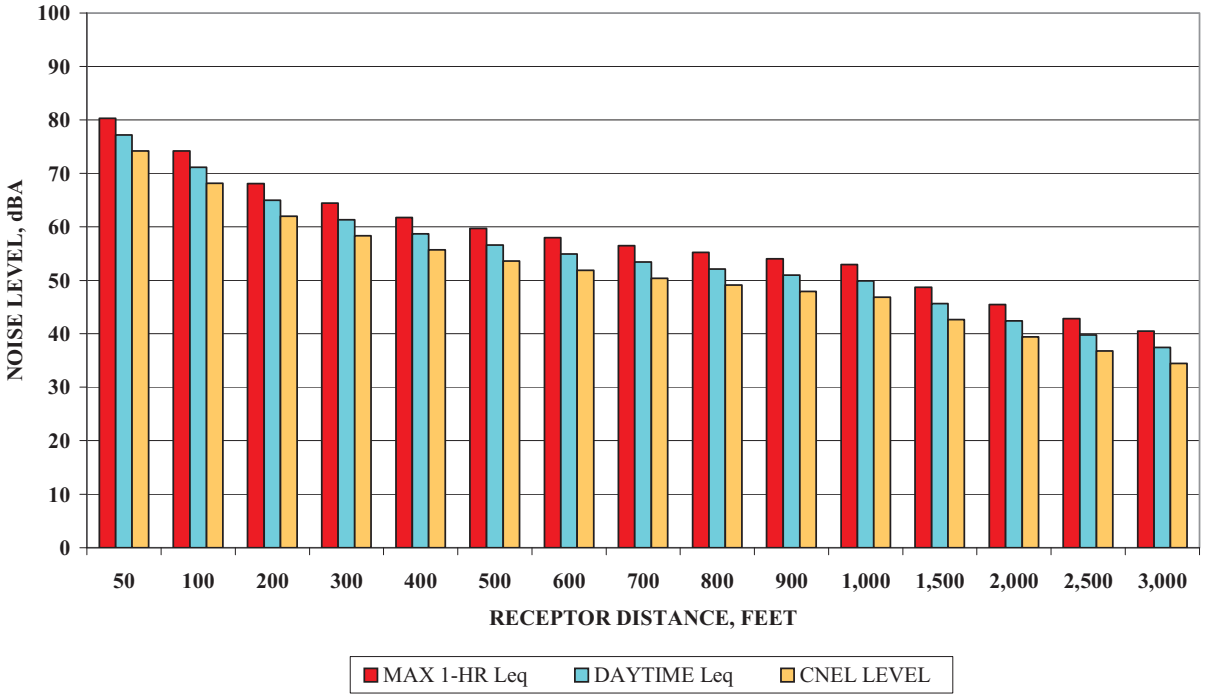

Figure 4K-3 illustrates noise levels from construction and installation of treatment unit facilities. Noise levels from this phase of construction activity would be lower than those produced during site preparation and excavation activities, but higher than those produced during utility, foundation, and pad installation.

As indicated in Figure 4K-1, the highest construction noise levels that would occur at the nearest sensitive receptor (500 feet away) during site preparation and excavation activities would be less than 65 dBA. Lower noise levels would be generated during other phases of construction activity. Consequently, construction noise impacts from the Proposed Project would be less than significant.

Figure 4K-3
Typical Noise Level From Treatment Unit Construction and Installation

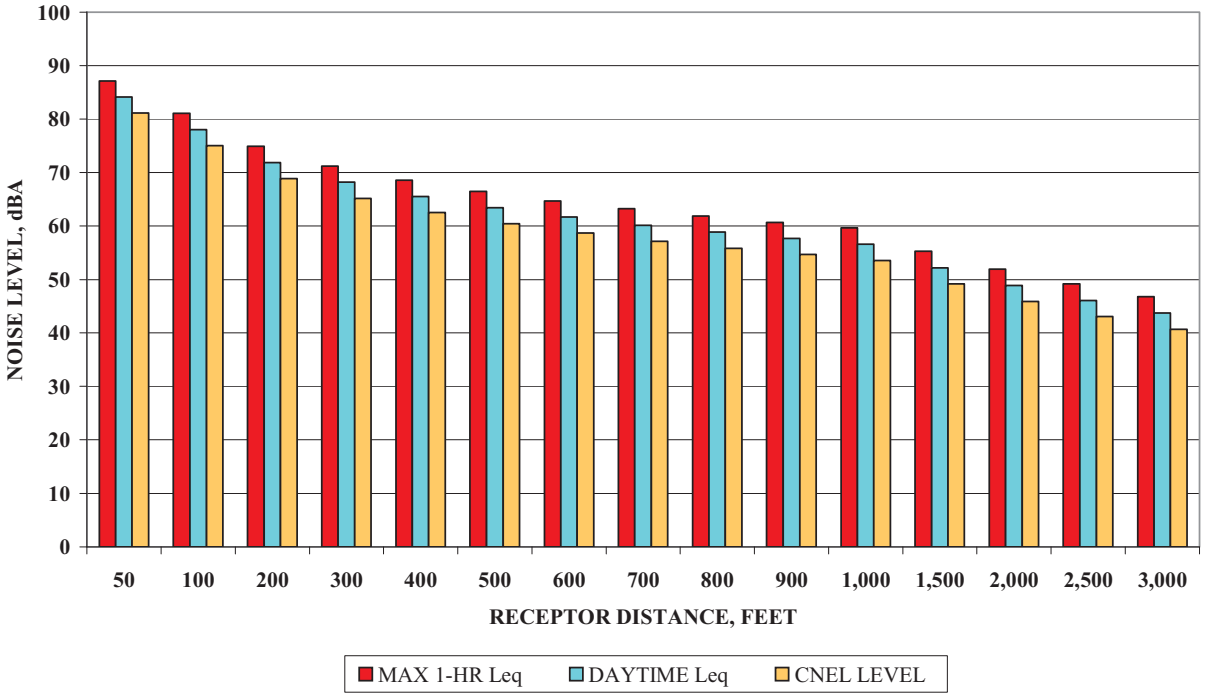

Operational Noise Impacts

The Proposed Project would add various new facilities at the GSD site while removing some existing facilities and replacing other existing equipment items with new equipment. The most significant new noise-generating equipment would include:

- A second biofilter and associated pumping;
- A small (70 kilowatt) cogeneration plant in its own enclosure;
- An activated sludge system with a Blower Building to house aeration equipment;
- Two new 1,000 Bhp emergency generators to replace the two existing 390 Bhp and 600 Bhp diesel emergency generators in the Power and Maintenance Building;

- A Solids Handling Building to house a waste activated sludge pump station, sludge thickeners, and dewatering screw presses;
- New secondary sedimentation tanks and associated pumping; and
- A solids holding tank and associated pumping.

In addition, an existing belt filter press would be removed (and replaced by the dewatering screw presses in the Solids Handling Building), and the diesel engine on the existing solids dredge would be replaced by a quieter electric motor.

The small cogeneration plant has a manufacturer certified noise level of 58 dBA at 33 feet, not including the shielding effects of the enclosure that would house it. Consequently, the cogeneration equipment would be expected to generate an outdoor noise level of less than 40 dBA at 50 feet. As shown in Table 4K-1, this is less than the existing ambient noise level at the GSD site.

The blowers for the activated sludge aeration system would be powered by electric motors and have a manufacturer certified noise level of less than 85 dBA each at a distance of 3 feet. The five blowers (three for normal use and two for standby use) would be housed in a building that does not require extensive doors or windows. Conventional construction materials should provide at least a 20 to 25 dBA noise reduction. Consequently, the Blower Building should contribute a maximum noise level (with all five blowers operating) of less than 48 dBA at 50 feet. As shown in Table 4K-1, this is less than the existing ambient noise level at the GSD site.

The two new 1,000 Bhp emergency generators, waste activated sludge pump stations, sludge thickeners, and dewatering screw presses would all be located inside existing or new buildings. Therefore, conventional construction materials are also expected to attenuate noise levels from this equipment such that noise levels would not exceed 65 dBA at sensitive receptor locations.

Because there would be no change to the existing influent and effluent pumping capacity at the plant, the cumulative change in pumping capacity at the plant would clearly be less than a doubling of existing pumping. Because there would be less than a doubling of cumulative pumping at the GSD plant and because most new noise-generating equipment would be housed in buildings, there would be less than a doubling of existing noise generation after construction of the Proposed Project. Assuming as a conservative estimate that there would be a doubling of noise sources at the GSD plant site, the net result would be a 3 dBA increase in overall site-related noise generation. On-site average noise levels would increase to a CNEL of about 65 to 68 dBA in the central part of the site (Site 2 in Table 4K-1). Off-site noise levels would increase to about 61 dBA at Site 1 (about 1,024 feet from the existing Biofilter No. 1).

The nearest sensitive receptors are the small number of residences in the industrial zoned area located 500 feet directly east of the GSD facility. Therefore, the maximum noise levels that they may experience would be 61 dBA (or less). In addition, most people cannot distinguish a noise level change of less than 1.5 to 2 dBA. Consequently, there would be only a minor change in noise conditions and no significant off-site noise impact at the closest noise-sensitive location.

b. Less-Than-Significant Impact. The Proposed Project is not expected to generate unusual groundborne vibration or groundborne noise levels. Construction activities typically create a small increase in groundborne vibrations, but the vibration level is rarely significant and diminishes rapidly with distance from the construction equipment unless unusual geological conditions are present. Construction equipment and construction operations for the Proposed Project would be similar to construction operations at many urban construction sites. Studies by the Federal Transit Administration (2006) and by the California Department of Transportation (2004) show that vibration levels produced by common construction equipment items are below the thresholds for cosmetic damage to buildings at distances beyond 50 feet from the equipment, and are below the threshold of human perception at distances beyond 200 feet from the equipment. Only pile driving equipment is likely to produce vibration levels felt over larger distances and capable of creating cosmetic damage to older fragile buildings at distances of 100 feet from the equipment. Therefore, impacts would be less than significant.

e. Less-Than-Significant-Impact. The Proposed Project is within the airport land use planning area of Santa Barbara Municipal Airport. Noise monitoring data collected at the project site and summarized in Table 4K-1 indicates that noise exposure at the treatment plant site is not above land use compatibility guidelines for noise-sensitive land uses (a CNEL of 65 dBA), and is below the State General Plan guidelines for commercial and industrial land uses (a CNEL of 70-75 dBA). Since wastewater treatment facility operations are not a noise-sensitive land use, existing airport operations do not create a significant noise impact at the GSD site.

f. No Impact. The Proposed Project would not be located near a private airstrip. Therefore, there would be no noise impact associated with aircraft operations from private airstrips, and no further study of this issue is required.

Further Study Required: No further study of noise impacts is required.

4L. Population and Housing

Would the project:

	Potentially Significant Impact	*Less Than Significant with Mitigation Incorporation*	*Less Than Significant Impact*	*No Impact*
a. Induce substantial population growth in an area, either directly (for example, by proposing new homes and businesses) or indirectly (for example, through extension of roads or other infrastructure)?	☐	☐	☒	☐
b. Displace substantial numbers of existing housing, necessitating the construction of replacement housing elsewhere?	☐	☐	☐	☒
c. Displace substantial numbers of people, necessitating the construction of replacement housing elsewhere?	☐	☐	☐	☒

Explanation

a. Less-Than-Significant Impact. The Proposed Project would not induce population growth in the project area. The Proposed Project does not include residential units and will not influence population growth. The Proposed Project **will not increase the capacity of the WWTP** ~~is intended to accommodate projected population growth while meeting the requirements of the settlement agreement between GSD and RWQCB that stipulates all wastewater discharged to the Pacific Ocean from GSD meet secondary treatment standards by 2014~~. However, the Proposed Project does not include an increase in the capacity of wastewater that is treated at the facility. Additionally, the Proposed Project would be located adjacent to an existing roadway and would not require the extension, or increase the capacity of, existing off-site infrastructure. The Proposed Project would not stimulate population growth beyond that already projected to occur. Therefore, less than significant impacts on population growth would be generated by the Proposed Project. No further study is required.

b. No Impact. The Proposed Project would not displace existing housing, necessitating the construction of replacement housing elsewhere. No housing currently exists on the site and all Proposed Project improvements are confined to property owned by GSD. No impact would occur and no further study is required.

c. No Impact. Implementation of the Proposed Project would not displace people, necessitating the construction of replacement housing elsewhere. As discussed above, the Proposed Project site is on the property of the existing GSD WWTP and does not include any housing. No impact would occur and no further study is required.

Further Study Required: No further study of population and housing is required.

4M. Public Services

Would the project result in substantial adverse physical impacts associated with the provision of new or physically altered governmental facilities, need for new or physically altered government facilities, the construction of which could cause significant environmental impacts, in order to maintain acceptable service ratios, response times, or other performance objectives for police, fire protection, schools, or other public facilities?

	Potentially Significant Impact	*Less Than Significant with Mitigation Incorporation*	*Less Than Significant Impact*	*No Impact*
a. Fire protection?	☐	☐	☒	☐
b. Police protection?	☐	☐	☒	☐
c. Schools?	☐	☐	☒	☐
d. Other public facilities?	☐	☐	☐	☒

Explanation

a. Less-Than-Significant Impact. The Proposed Project would not result in significant adverse impacts on fire protection. Fire protection services are provided by the City of Santa Barbara Fire Department and the Santa Barbara County Fire Department. The nearest responder to the Proposed Project site is Fire Station 8, located at 40 Hartley Place, approximately 1.5 miles from the Proposed Project site. The Proposed Project would not result in an increase in residential units and population size and would therefore not affect response times. No further study of this issue is required.

b. Less-Than-Significant Impact. The Proposed Project would not result in a net increase of residential units and therefore would not result in a population increase within the service area, negating the need for a new police station or improvements to the existing police station servicing the area. No further study of this issue is required.

c. Less-Than-Significant Impact. The Proposed Project would not result in substantial adverse impacts to existing schools, or necessitate the need for new schools. The Proposed Project in itself is not growth promoting and therefore would not increase the demand for additional public services and facilities such as schools. Impacts would be less than significant, and no further study of this issue is required.

d. No Impact. The Proposed Project would result in substantial physical impacts associated with physically altering an existing municipal WWTP. However, the Proposed Project would bring the existing facility into compliance with the waste discharge requirements stipulated in the November 2004 settlement agreement between GSD and RWQCB. By ensuring that all treated wastewater meets secondary treatment standards, the Proposed Project would improve the quality of the environment. No adverse impacts to other public facilities would be generated by the Proposed Project. Impacts can be characterized as a positive.

Further Study Required: No further study of public services is required.

4N. Recreation and Parks

Would the project:

	Potentially Significant Impact	*Less Than Significant with Mitigation Incorporation*	*Less Than Significant Impact*	*No Impact*
a. Increase the use of existing neighborhood and regional parks or other recreational facilities such that substantial physical deterioration of the facility would occur or be accelerated?	☐	☐	☐	☒
b. Include recreational facilities or require the construction or expansion of recreational facilities that might have an adverse physical effect on the environment?	☐	☐	☐	☒

Explanation

a. No Impact. Implementation of the Proposed Project would not alter the use of nearby recreational facilities. The Proposed Project **would** ~~is intended~~ upgrade existing facilities in order to treat water to secondary standards; which includes improvements within the boundaries of the current facility. Therefore, there would be no impacts to recreation and/or parks, and no further study of this issue is required.

b. No Impact. The proposed improvements to the GSD facility include on-site improvements of the water treatment system, and therefore would not require the construction or expansion of recreational facilities. Therefore, no further study of this issue is required.

Further Study Required: No further study of recreation impacts is required.

4O. Transportation/Traffic

Would the project:

	Potentially Significant Impact	*Less Than Significant with Mitigation Incorporation*	*Less Than Significant Impact*	*No Impact*
a. Cause an increase in traffic that is substantial in relation to the existing traffic load and capacity of the street system (i.e., result in a substantial increase in either the number of vehicle trips, the volume to capacity ratio on roads, or congestion at intersections)?	☐	☒	☐	☐
b. Exceed, either individually or cumulatively, a level of service standard established by the county congestion management agency for designated roads or highways?	☐	☒	☐	☐
c. Result in a change in air traffic patterns, including either an increase in traffic levels or a change in location that results in substantial safety risks?	☐	☐	☐	☒
d. Result in inadequate emergency access?	☐	☐	☒	☐
e. Result in inadequate parking capacity?	☐	☐	☒	☐
f. Conflict with adopted policies, plans, or programs supporting alternative transportation (e.g., bus turnouts, bicycle racks)?	☐	☒	☐	☐

Explanation

Penfield & Smith prepared a traffic and circulation study for the Proposed Project (Appendix D), which is the basis for the analysis provided below.

a,b. Less-Than-Significant with Mitigation Incorporated. Implementation of the Proposed Project will generate less than significant impacts to the existing traffic load and capacity of the street system, with the implementation of mitigation measures. During construction, the Proposed Project would in the short-term potentially increase traffic volume on Moffett Place, as well as surrounding streets, including Fowler Road, Fairview Avenue, and Hollister Avenue (Appendix D). Without mitigation, short-term impacts would be significant. However, implementation of mitigation measure TRAF-1 below would reduce impacts to less than significant levels.

The Traffic and Circulation Study determined that the long-term effects of the Proposed Project would result in only a minor increase in daily trips associated with the addition of two employees and would not measurably change any roadway or intersection operations (Appendix D). Specifically, the Proposed Project would not generate traffic that, either cumulatively or individually, impacts the LOS for designated roads and highways, established by the Santa Barbara County Congestion Management

Agency, the Highway Capacity Manual, the City of Goleta Final General Plan 2030 Forecast Report, and the Santa Barbara Aviation Facilities Plan. Therefore, long-term impacts would be less than significant.

Mitigation Measure TRAF-1. The short-term increase in traffic volume will be reduced by the construction traffic volume being evenly spread out over the duration of the 3 year construction period, as well as the incorporation of the following measures: (1) large hauling trucks shall avoid transporting during peak commute hours, and (2) trucks routes shall be limited to principle arteries and freeways. Additionally, supplementary signage shall be provided on Moffett Place to indicate construction and flaggers shall be employed to assist in stopping traffic when trucks are entering or exiting the project site. ~~It is also recommended that Moffett Place be restriped after construction of the new airport terminal loop road to eliminate the existing northbound left-turn lane currently leading to the airport driveway, to provide only a southbound left-turn at the GSD facility's main entrance.~~

c. No Impact. The Proposed Project would not result in a change in air traffic patterns. No further study of this issue is required.

d. Less-Than-Significant Impact. The Proposed Project would not result in inadequate emergency access. The Proposed Project would comply with applicable Fire Department regulations, California Building Standards Code (CBSC), and California Division of State Architect (DSA) requirements. The GSD would also provide the local fire department with a full site plan for review, including location of all buildings, fences, drive gates, retaining wall or other features that might affect fire department access, with unobstructed fire lanes for access identified. This review process, along with GSD compliance with the applicable regulations and standards stated above, would ensure that adequate emergency access would be provided. As a result, impacts with regard to emergency access would be less than significant, and no further study of this issue is required.

e. Less-Than-Significant Impact. The current site accommodates the vehicles of GSD employees (32 people), miscellaneous inspection and delivery vehicles (6), cleaning trucks (2), and trailers (2) (Appendix D). After the construction of the Proposed Project, the GSD anticipates the need for two additional employees. Existing parking onsite would accommodate these new employees. During construction, large equipment trucks, cranes, tractors and other heavy equipment will be situated close to the actual construction site and shall not occupy parking spaces needed for the daily operation of the GSD. Therefore, impacts resulting from the Proposed Project would be less than significant.

f. Less-Than-Significant Impact Mitigation Incorporated. The Proposed Project would not conflict with adopted policies, plans, or programs supporting alternative transportation. The GSD is accommodating to the community's efforts to support walking, bicycling, and using public transportation. Construction traffic associated with the Proposed Project could affect use of Class II bike lanes along Moffett Place, Fowler Road, and Fairview Avenue. Without mitigation, impacts would be significant. However, implementation of mitigation measure TRAF-1 would reduce impacts to less than significant levels.

Further Study Required: No further study is required

4P. Utilities and Service Systems

Would the project:

	Potentially Significant Impact	*Less Than Significant with Mitigation Incorporation*	*Less Than Significant Impact*	*No Impact*
a. Exceed wastewater treatment requirements of the applicable Regional Water Quality Control Board?	☐	☐	☒	☐
b. Require or result in the construction of new water or wastewater treatment facilities or expansion of existing facilities, the construction of which could cause significant environmental effects?	☐	☐	☒	☐
c. Require or result in the construction of new stormwater drainage facilities or expansion of existing facilities, the construction of which could cause significant environmental effects?	☐	☐	☒	☐
d. Have sufficient water supplies available to serve the project from existing entitlements and resources, or are new or expanded entitlements needed?	☐	☐	☒	☐
e. Result in a determination by the wastewater treatment provider which serves or may serve the project that it has adequate capacity to serve the project's projected demand in addition to the provider's existing commitments?	☐	☐	☒	☐
f. Be served by a landfill with sufficient permitted capacity to accommodate the project's solid waste disposal needs?	☐	☐	☒	☐
g. Comply with federal, state, and local statutes and regulations related to solid waste.	☐	☐	☒	☐

Explanation

a. Less-Than-Significant Impact. Implementation of the Proposed Project would not exceed wastewater treatment requirements of the Central Coast RWQCB. The Proposed Project is intended to improve compliance with mandated discharge requirements. Within the NPDES discharge permit, the effluent quality criteria shall be specified, as determined by the RWQCB, based on receiving water guidelines and waste load allocations. During construction of the Proposed Project, the GSD's construction contractor will obtain a NPDES permit from the RWQCB for the construction activities, which will include filing a Notice of Intent and updating GSD's Storm Water Pollution Prevention Plan. Therefore, impacts would be less than significant.

b. Less-Than-Significant Impact. The Proposed Project **would not** ~~is not intended to~~ add additional treatment capacity to the existing system. As such, the potential impacts of the project on wastewater and water treatment facilities would be less than significant.

c. Less-Than-Significant Impact. The Proposed Project site is in a developed area of Santa Barbara County, which contains an existing storm water collection and conveyance system. Development of the Proposed Project site is not anticipated to increase the volume or velocity of storm water runoff off of the site (see Sections 3.8 and 4H). Therefore, impacts would be less than significant.

d. Less-Than-Significant Impact. The Proposed Project would have a less than significant impact associated with water supplies. Water distribution infrastructure is already in place on and around the Proposed Project site. The Goleta Water District is responsible for supplying water within the City of Goleta and for ensuring that the delivered water quality meets applicable California Department of Health Services standards for drinking water. The new plant upgrades themselves (i.e., new equipment) would not require additional potable water for the new plant upgrades. Reclaimed water produced onsite is used for plant processes and for on-site irrigation. Expansion of the GSD facility would only require the addition of two personnel, increasing potable water use by a minor amount. In addition, the proposed project would increase the volume of reclaimed water potentially available for reuse due to increased secondary treatment. Therefore, the expected increase in water demand as a result of the Proposed Project is concluded to be minimal, when compared to the capacity of the water supply facilities serving the Proposed Project area. Furthermore, GSD will comply with local, regional, and State water conservation policies and must follow standard BMPs to reduce water consumption. Therefore, impacts on water supply would be less than significant.

e. Less-Than-Significant Impact. Implementation of the Proposed Project would not effect the capacity of wastewater that is treated at the GSD facility. Therefore, impacts would be less than significant, and no further study of this issue is required.s

f. Less-Than-Significant Impact. Construction of the wastewater treatment plant upgrades would generate approximately 24,000 cubic feet (or 890 cubic yards) of asphalt which can and will be entirely recycled. Construction would also generate solid waste from the demolition of a 3,000 square foot (sf) Shower and Locker Building and 625 sf odor reduction tower that would be removed in the Headworks area. Following the County of Santa Barbara's Environmental Thresholds and Guidelines Manual (Santa Barbara County 2008), demolition for a typical commercial development generates 100 pounds of solid waste per square foot. For the Proposed Project, this would equate to approximately 362,500 pounds of solid waste from demolition of the Shower and Locker Building and odor reduction tower, or 181.25 tons of solid waste. This material would also be recycled to the extent technically feasible. Generation of 350 tons of solid waste after recycling would be considered a significant impact on solid waste, according to the County's Environmental Thresholds and Guidelines Manual. Therefore, construction impacts on solid waste would be less than significant.

Under operation of the upgraded GSD facility, GSD intends to implement headworks upgrades that would result in better capture of debris (screenings) along with enhancements to clean and compact the screenings to reduce retained water which would result in reducing the overall volume of municipal waste sent to the landfill and through the cleaning process, would also make the screenings more acceptable to disposal at the landfill.

Approximately 1,200 tons per year of dried, stabilized solid waste, as Class A and Class B biosolids are currently produced by the GSD. Approximately ten percent of biosolids are classified as Class A biosolids used locally by the public, and the remainder is classified as Class B biosolids and is transported to Kern County for land application (agricultural use) (HDR 2008). The Proposed Project would not appreciably increase the volume of Class B biosolids being transported off-site, as Proposed Project upgrades to the sludge dewatering system (i.e., mechanical thickeners) are expected to offset the increased capture of solids through complete secondary treatment by greater drying before transport. As noted in Section 4O, no additional truck trips would be required as part of the Proposed Project. Therefore operational impacts would be less than significant, and no further study of this issue is required.

g. Less-Than-Significant Impact. During construction and operation of the Proposed Project, the GSD must comply with all City, County, and State solid waste diversion, reduction, and recycling mandates, including compliance with the Santa Barbara County Integrated Waste Management Plan. Therefore, impacts would be less than significant, and no further study of this issue is required.

Further Study Required: No further study of utilities and services systems is required.

4Q. Mandatory Findings of Significance

Does the project:

	Potentially Significant Impact	*Less Than Significant with Mitigation Incorporation*	*Less Than Significant Impact*	*No Impact*
a. Have the potential to degrade the quality of the environment, substantially reduce the habitat of a fish or wildlife species, cause a fish or wildlife population to drop below self-sustaining levels, threaten to eliminate a plant or animal community, reduce the number or restrict the range of a rare or endangered plant or animal or eliminate important examples of the major periods of California history or prehistory?	☐	☒	☐	☐
b. Have impacts that are individually limited, but cumulatively considerable? ("Cumulatively considerable" means that the incremental effects of a project are considerable when viewed in connection with the effects of past projects, the effects of other current projects, and the effects of probable future projects)?	☐	☒	☐	☐
c. Have environmental effects that will cause substantial adverse effects on human beings, either directly or indirectly?	☐	☒	☐	☐

Explanation

a,c. Less-Than-Significant Impact with Mitigation Incorporated. Because of the highly urbanized nature of the Proposed Project area and surrounding land uses, the proposed project would not have a significant impact on the habitat or population level of fish or wildlife species, threaten a plant or animal community, or impact the range of a rare or endangered plant or animal. However, construction of the Proposed Project could affect nesting bird species protected by the Migratory Bird Treaty Act and California Fish and Game Code. In addition, the Proposed Project would have potentially significant impacts on cultural resources and traffic (due to construction traffic). However, impacts would be less than significant with mitigation.

b. Less-Than-Significant Impact with Mitigation Incorporated. Where the Proposed Project would have no impact, specifically with respect to agricultural resources, mineral resources, and recreation, it would not contribute to cumulative impacts. In addition, issues specific to site conditions, such as site geology and soils, do not have cumulative effects. The Proposed Project is not growth inducing; thus, it would not contribute to the cumulative effects of population growth. The incremental effects of the Proposed Project that could contribute to cumulative impacts include traffic impacts associated with vehicle trips generated by construction of the Proposed Project and potential impacts to biological and cultural resources. However, with implementation of mitigation measures, the small incremental effects of the Proposed Project would be minimized and the project would not have a considerable contribution to cumulative impacts in these areas.

5.0 ENVIRONMENTAL DETERMINATION

On the basis of this initial evaluation:

I find that the proposed project COULD NOT have a significant effect on the environment, and a NEGATIVE DECLARATION will be prepared. ☐

I find that although the proposed project could have a significant effect on the environment, there will not be a significant effect in this case because revisions in the project have been made by or agreed to by the project proponent. A MITIGATED NEGATIVE DECLARATION has been prepared. ☒

I find that the proposed project MAY have a significant effect on the environment, and an ENVIRONMENTAL IMPACT REPORT is required. ☐

I find that the propose project MAY have a "potentially significant impact" or "potentially significant unless mitigated" impact on the environment, but at least one effect (1) has been adequately analyzed in an earlier document pursuant to applicable legal standards, and (2) has been addressed by mitigation measures based on the earlier analysis as described on attached sheets. An ENVIRONMENTAL IMPACT REPORT is required, but it must analyze only the effects that remain to be addressed. ☐

I find that although the proposed project could have a significant effect on the environment, because all potentially significant effects (a) have been analyzed adequately in an earlier EIR or NEGATIVE DECLARATION pursuant to applicable standards, and (b) have been avoided or mitigated pursuant to that earlier EIR or NEGATIVE DECLARATION, including revisions or mitigation measures that are imposed upon the proposed project, nothing further is required. ☐

Date 9/8/09

7.0 REPORT PREPARATION

This Mitigated Negative Declaration has been prepared for GSD by Tetra Tech, Inc. The individuals who contributed to this document are listed below.

LEAD AGENCY

Goleta Sanitary District
One William Moffett Place
Goleta, California 93117

- Kamil S. Azoury, General Manager/District Engineer
- Jeff Salt, Operations Manager
- Kathleen Werner, Technical Services & Laboratory Supervisor

MND PREPARATION

Tetra Tech, Inc.
301 Mentor Drive, Suite A
Santa Barbara, California 93111

- Randy Westhaus, Project Manager
- Michelle Bates, Senior Biologist
- Fred Buddinger, Cultural Resources Specialist
- Mark Chitjian, Air Quality Specialist
- Steve Dodson, Geologist
- Michelle Gibbs, Senior Planner
- Matthew Houlahan, Geologist
- Erin King, Cultural Resources Specialist
- Jennifer Miller, Environmental Scientist
- Heather Moine, Environmental Scientist
- Francesca Perrell, Technical Editor
- Robert Sculley, Noise Specialist
- Nancy Wellhausen, Air Quality Specialist

- Jim Steele, Professional Geologist and Certified Engineering Geologist

Dudek
621 Chapala Street
Santa Barbara, California 93101

- David Stone, Cultural Resources Manager

SUBCONSULTANTS

Penfield & Smith (Traffic)
111 East Victoria Street
Santa Barbara, California 93101

- Dennis Lammers, Transportation Planner
- Lisa Valdez, Transportation Planner

ATTACHMENT E – MONITORING AND REPORTING PROGRAM

Table of Contents

I. General Monitoring Provisions E-2
II. Monitoring Locations E-4
III. Influent Monitoring Requirements E-6
A. Monitoring Location M-INF E-6
IV. Effluent Monitoring Requirements E-7
A. Monitoring Location 001 ..... E-7
V. Whole Effluent Toxicity Testing Requirements E-9
VI. Land Discharge Monitoring Requirements E-14
VII. Reclamation Monitoring Requirements E-14
VIII. Receiving Water Monitoring Requirements – Surface Water and Groundwater E-14
A. Monitoring Location Surf Zone E-14
B. Monitoring Location Near Shore E-15
IX. Benthic Monitoring Requirements E-17
X. Trawl Survey E-21
XI. Bioaccumulation Monitoring E-22
XII. Data Analysis E-25
XIII. Biosolids Monitoring E-26
XIV. Outfall and Diffuser Inspection E-31
XV. Pretreatment Requirements E-31
XVI. Reporting Requirements E-34

List of Tables

Table E-1. Monitoring Station Locations E-4
Table E-2. Influent Monitoring E-6
Table E-3. Effluent Monitoring E-7
Table E-4. Remaining Priority Toxic Pollutants E-8
Table E-5. Chronic Toxicity E-11
Table E-6. Toxicity Reduction Evaluation Schedule E-14
Table E-7. Surf Zone Monitoring E-15
Table E-8. Near-Shore Monitoring E-15
Table E-9. Ocean Station Monitoring E-16
Table E-10. Benthic Sediment Monitoring E-17
Table E-11. Bioaccumulation Chemical Analysis E-24
Table E-12. Amount of Biosolids and Frequency of Analysis E-27
Table E-13. Biosolids Monitoring E-27
Table E-14. Monitoring Periods and Reporting Schedules E-35

ATTACHMENT E – MONITORING AND REPORTING PROGRAM (MRP)

The Code of Federal Regulations section 122.48 requires that all NPDES permits specify monitoring and reporting requirements. Water Code Sections 13267 and 13383 also authorize the Regional Water Quality Control Board (Regional Water Board) to require technical and monitoring reports. This MRP establishes monitoring and reporting requirements, which implement the federal and California regulations.

The monitoring program for a discharger receiving a Clean Water Act Section 301(h) Modified National Pollutant Discharge Elimination System (NPDES) permit is intended to: a) document short and long-term effects of the discharge on receiving waters, sediments, biota, and on beneficial uses of the receiving water; b) determine compliance with NPDES permit requirements and conditions; and c) assess the effectiveness of industrial pretreatment and toxics control programs.

I. GENERAL MONITORING PROVISIONS

The Regional Water Board and U.S. Environmental Protection Agency, Region IX (USEPA) may revise the monitoring program presented herein, within the specified order and permit period. The program will be reviewed at annual intervals to assess its effectiveness at meeting the objectives stated above. If predictable relationships among effluent, water quality and biological monitoring variables can be clearly demonstrated, it may be appropriate to decrease certain elements of the monitoring program. Conversely, the monitoring program may be intensified if it appears that the above objectives cannot be achieved through the existing monitoring program.

A. Laboratories analyzing monitoring samples shall be certified by the California Department of Public Health (CDPH), in accordance with CWC section 13176, and must include quality assurance/quality control data with their reports.

B. Samples and measurements taken as required herein shall be representative of the volume and nature of the monitored discharge. All samples shall be taken at the monitoring locations specified below and, unless otherwise specified, before the monitored flow joins or is diluted by any other waste stream, body of water, or substance. Monitoring locations shall not be changed without notification to and approval of the Regional Water Board and USEPA.

C. Appropriate flow measurement devices and methods consistent with accepted scientific practices shall be selected and used to ensure the accuracy and reliability of measurements of the volume of monitored discharges. The devices shall be installed, calibrated, and maintained to ensure that the accuracy of the measurements is consistent with the accepted capability of that type of device. Devices selected shall be capable of measuring flows with a maximum deviation of less than ±10 percent from true discharge rates throughout the range of expected discharge volumes. Guidance in

selection, installation, calibration, and operation of acceptable flow measurement devices can be obtained from the following references.

1. A Guide to Methods and Standards for the Measurement of Water Flow, U.S. Department of Commerce, National Bureau of Standards, NBS Special Publication 421, May 1975, 96 pp. (Available from the U.S. Government Printing Office, Washington, D.C. 20402. Order by SD Catalog No. C13.10:421.)

2. Water Measurement Manual, U.S. Department of Interior, Bureau of Reclamation, Second Edition, Revised Reprint, 1974, 327 pp. (Available from the U.S. Government Printing Office, Washington D.C. 20402. Order by Catalog No. 172.19/2:W29/2, Stock No. S/N 24003-0027.)

3. Flow Measurement in Open Channels and Closed Conduits, U.S. Department of Commerce, National Bureau of Standards, NBS Special Publication 484, October 1977, 982 pp. (Available in paper copy or microfiche from National Technical Information Services (NTIS) Springfield, VA 22151. Order by NTIS No. PB-273 535/5ST.)

4. NPDES Compliance Sampling Manual, U.S. Environmental Protection Agency, Office of Water Enforcement, Publication MCD-51, 1977, 140 pp. (Available from the General Services Administration (8FFS), Centralized Mailing Lists Services, Building 41, Denver Federal Center, CO 80225.)

D. All monitoring instruments and devices used by the Discharger to fulfill the prescribed monitoring program shall be properly maintained and calibrated as necessary to ensure their continued accuracy. All flow measurement devices shall be calibrated at least once per year to ensure continued accuracy of the devices.

E. Monitoring results, including noncompliance, shall be reported at intervals and in a manner specified in this MRP.

F. Unless otherwise specified by this MRP, all monitoring shall be conducted according to test procedures established at 40 CFR 136, *Guidelines Establishing Test Procedures for Analysis of Pollutants*. All analyses shall be conducted using the lowest practical quantitation limit achievable using the specified methodology. Where effluent limitations are set below the lowest achievable quantitation limits, pollutants not detected at the lowest practical quantitation limits will be considered in compliance with effluent limitations. Analysis for toxics listed by the California Toxics Rule shall also adhere to guidance and requirements contained in the *Policy for Implementation of Toxics Standards for Inland Surface Waters, Enclosed Bays, and Estuaries of California* (2005). Analyses for toxics listed in Table B of the California Ocean Plan (2005) shall adhere to guidance and requirements contained in that document. The Minimum Levels identified in the 2005 Ocean Plan represent the lowest concentration of a pollutant that can be quantitatively measured in a sample given the current state of performance in analytical chemistry methods in California.

II. MONITORING LOCATIONS

A. The Discharger shall establish the following monitoring locations to demonstrate compliance with the effluent limitations, discharge specifications, receiving water limitations, and other requirements in this Order/Permit. Monitoring stations have been located to assess the short-term environmental impacts of the discharge on the receiving water, benthic sediment, and biota in the vicinity of the outfall.

Table E-1 – Monitoring Station Locations

Monitoring Location Name	Description	Latitude	Longitude	Distance from Reference
M-INF	Treatment Plant Headworks	--	--	--
001	Effluent, downstream of any inplant return flows or disinfection units (Discharge Point 001)	--	--	--
Surf Zone Monitoring Locations				**Along-Shore Distance**
A	Goleta Point	--	--	--
A1	500 meters downcoast of Goleta Point	--	--	--
A2	1,000 meters west of outfall	--	--	--
B	300 meters west of outfall	--	--	--
C	Onshore at outfall	--	--	--
D	300 meters east of outfall	--	--	--
E	1,000 meters east of outfall	--	--	--
Nearshore (Ocean) Monitoring Locations				**Distance from Diffuser Center (m)**
K1	West of outfall at offshore edge of kelp bed (defined as 60 ft contour)	34° 24’37” N	119° 50’ 12” W	1,200
K2	West of outfall, at offshore edge of kelp bed	34° 24’55” N	119° 49’ 49” W	200
K3	Above outfall at offshore edge of kelp bed	34° 24’55” N	119° 50’ 35” W	0
K4	East of outfall at offshore edge of kelp bed	34° 24’54” N	119° 49’ 24” W	200
K5	East of outfall at offshore edge of kelp bed	34° 24’50” N	119° 48’ 56” W	1,200

Monitoring Location Name	Description	Latitude	Longitude	Distance from Reference
Ocean Station Monitoring Locations				**Distance from Diffuser Center (m)**
B-1	1,500 meters west and at same depth as diffuser	34° 24' 17" N	119° 50' 31" W	1,500
B-2	500 meters west and at same depth as diffuser	34° 24' 25" N	119° 49' 72" W	500
B-3	250 meters west and at same depth as diffuser	34° 24' 27" N	119° 49' 55" W	250
B-4	25 meters west and at same depth as diffuser	34° 24' 36" N	119° 49' 36" W	25
B-5	25 meters east and at same depth as diffuser	34° 24' 40" N	119° 49' 29" W	25
B-6	3,000 meters east and at same depth as diffuser	34° 24' 45" N	119° 47' 54" W	3,000

Benthic Monitoring Locations				**Distance from Diffuser Center (m)**
B-1	1,500 meters west of the diffuser	34° 24' 17" N	119° 50' 31" W	1,500
B-2	500 meters west of the diffuser	34° 24' 25" N	119° 49' 72" W	500
B-3	250 meters west of the diffuser	34° 24' 27" N	119° 49' 55" W	250
B-4	25 meters west of the diffuser	34° 24' 36" N	119° 49' 36" W	25
B-5	25 meters east of the diffuser	34° 24' 40" N	119° 49' 29" W	25
B-6	3,000 meters east of the diffuser	34° 24' 45" N	119° 47' 54" W	3,000

B. Plume Monitoring Stations

WC-ZID 25 meters from the outfall in the wastewater plume
WC-100M In the plume, 100 meters from the outfall on the same heading as WC-ZID

Plume location shall be determined at the time of sampling by a combination of temperature-salinity profiles and light transmittance readings, and/or by drogue tracking. Drogue tracking is necessary where profiles fail to positively identify plume direction. The drogue shall be placed at the center of the diffuser, in the effluent plume and allowed to move with the wastewater field to the two plume stations. Plume thickness shall be determined and samples taken mid-depth in the plume. If plume depth/thickness cannot be determined, the plume sample shall be taken 3 meters below the thermocline. Reference

samples shall be obtained at the same depth at station B6. All plume locating data and thickness shall be reported and discussed in the quarterly reports.

C. Trawl Stations

TB3 Begin trawl at ocean station B3, first trawl heading west (away from station) at depth (isobath) of diffuser mid-point (approximately 25 meters)

TB6 Begin trawl at ocean station B6, first trawl heading east (away from station) at depth (isobath) of diffuser mid-point (approximately 25 meters) (reference)

III. INFLUENT MONITORING REQUIREMENTS

A. Monitoring Location M-INF

1. The Discharger shall monitor representative samples[1] of influent to the treatment plant at M-INF as follows:

Table E-2. Influent Monitoring

Parameter	Units	Sample Type	Minimum Frequency of Sampling/Analysis
Daily Flow	MG	Metered	Daily
Maximum Daily Flow	MGD	Metered	Daily
Mean Daily Flow	MGD	Calculated	Monthly
BOD_5 (20°C)	mg/L	24-hr Composite	3 days/week
Suspended Solids	mg/L	24-hr Composite	5 days/week
Grease and Oil	mg/L	Grab	Every two weeks
pH	pH units	Grab	Weekly
Rainfall	Inches	Measured	Daily
Arsenic	µg/L	24-hr. Composite	Monthly
Cadmium	µg/L	24-hr. Composite	Monthly
Chromium(Hex)[1]	µg/L	24-hr. Composite	Monthly
Copper	µg/L	24-hr. Composite	Monthly
Lead	µg/L	24-hr. Composite	Monthly
Mercury	µg/L	24-hr. Composite	Monthly
Nickel	µg/L	24-hr. Composite	Monthly
Silver	µg/L	24-hr. Composite	Monthly
Zinc	µg/L	24-hr. Composite	Monthly
Selenium	µg/L	24-hr. Composite	Annually (Oct)
Cyanide	µg/L	Grab	Annually (Oct)
Ocean Plan Table B Constituents[2] and	Units per Table B	24-Hr Composite	Annually (Oct)[4]

[1] Influent samples shall be corrected to compensate for in-plant return flows.

Remaining Priority Toxic Pollutants[3]			

[1] Discharger may at their option meet this limitation as total chromium limitation.
[2] Those pollutants identified in Table B of the Ocean Plan (2005) other than the metals listed above in this table. Analyses, compliance determination, and reporting for these pollutants shall adhere to applicable provisions of the Ocean Plan, including the Standard Monitoring Procedures presented in Appendix III of the Ocean Plan. The Discharger shall establish calibration standards (or require that their contract laboratory do so) so that the Minimum Levels (MLs) presented in Appendix II of the Ocean Plan are the lowest calibration standards. The Discharger and its analytical laboratory shall select MLs, which are below applicable water quality criteria of Table B; and when applicable water quality criteria are below all MLs, the Discharger and its analytical laboratory shall select the lowest ML.
[3] See Table E-4 below for Remaining Priority Toxic Pollutants.
[4] Influent monitoring shall be coordinated during the same time frame as effluent sampling scheduled in section IV.A of this MRP.

IV. EFFLUENT MONITORING REQUIREMENT

A. Monitoring Location 001

1. The Discharger shall monitor representative effluent samples (downstream of any in-plant return flows or disinfection units) at 001 as follows. If more than one analytical test method is listed for a given parameter, the Discharger must select from the listed methods and corresponding Minimum Level:

Table E-3. Effluent Monitoring

Parameter	Units	Sample Type	Minimum Frequency of Sampling/Analysis
Daily Flow	MG	Metered	Daily
Maximum Daily Flow	MGD	Metered	Daily
Mean Daily Flow	MGD	Calculated	Monthly
Temperature	°C	Grab	5 days/week
Total Coliform	MPN/100 mL	Grab	5 days/week
Fecal Coliform	MPN/100 mL	Grab	5 days/week
Enterococcus	MPN/100 mL	Grab	5 days/week
BOD_5 (20°C)	mg/L	24-hr Composite	5 days/week
Suspended Solids	mg/L	24-hr Composite	5 days/week
Settleable Solids	mg/L	Grab	5 days/week
Total Chlorine Residual (chlorine contact tank)	mg/L	Grab	Daily
Ammonia (as N)	mg/L	Grab	Monthly
Acute Toxicity[1]	TUa	24-hr Composite	Quarterly (Jan/Apr/Jul/Oct)
Chronic Toxicity[1]	TUc	24-hr Composite	Quarterly (Jan/Apr/Jul/Oct)
Grease and Oil	mg/L	Grab	Weekly
pH	pH units	Grab	5 days/week

Parameter	Units	Sample Type	Minimum Frequency of Sampling/Analysis
Turbidity	NTU	Grab	5 days/week
Total Chlorine Residual (Final Effluent)	mg/L	Continuous	Continually
Arsenic[2]	µg/L	24-hr. Composite	Monthly
Cadmium[2]	µg/L	24-hr. Composite	Monthly
Chromium(Hex) [2]	µg/L	24-hr. Composite	Monthly
Copper[2]	µg/L	24-hr. Composite	Monthly
Lead[2]	µg/L	24-hr. Composite	Monthly
Mercury[2]	µg/L	24-hr. Composite	Monthly
Nickel[2]	µg/L	24-hr. Composite	Monthly
Silver[2]	µg/L	24-hr. Composite	Monthly
Zinc[2]	µg/L	24-hr. Composite	Monthly
Selenium[2]	µg/L	24-hr. Composite	Annually (Oct)
Cyanide[2]	µg/L	Grab	Annually (Oct)
Ocean Plan Table B Constituents[3] and Remaining Priority Toxic Pollutants[4]	µg/L	24-hr. Composite	Annually (Oct)

[1] Whole effluent, acute and chronic toxicity monitoring shall be conducted according to the requirements established in section V of this MRP.
[2] Analysis shall be for total recoverable metals.
[3] Those pollutants identified in Table B of the Ocean Plan (2005) other than the metals listed above in this table. Analyses, compliance determination, and reporting for these pollutants shall adhere to applicable provisions of the Ocean Plan, including the Standard Monitoring Procedures presented in Appendix III of the Ocean Plan. The Discharger shall establish calibration standards (or require that their contract laboratory do so) so that the Minimum Levels (MLs) presented in Appendix II of the Ocean Plan are the lowest calibration standards. The Discharger and its analytical laboratory shall select MLs, which are below applicable water quality criteria of Table B; and when applicable water quality criteria are below all MLs, the Discharger and its analytical laboratory shall select the lowest ML.
[4] See Table E-4 below for Remaining Priority Toxic Pollutants.

Table E-4: Remaining Priority Toxic Pollutants

From 40 CFR 131.36 (7-1-03 Edition), and EPA Application Form 3510-2A (Rev. 1-99)

Parameter	Units	Sample Type	Min. Sampling Frequency
Acenapthene	µg/L	24-hr Composite	Annually (Oct)
1,2,4,-Trichlorobenzene	µg/L	24-hr Composite	Annually (Oct)
2-Chloronapthalene	µg/L	24-hr Composite	Annually (Oct)
2,6-Dinitrotoluene	µg/L	24-hr Composite	Annually (Oct)
4-Chlorophenyl Phenyl Ether	µg/L	24-hr Composite	Annually (Oct)
4-Bromophenyl Phenyl Ether	µg/L	24-hr Composite	Annually (Oct)
Naphthalene	µg/L	24-hr Composite	Annually (Oct)
Butylbenzyl Phthalate	µg/L	24-hr Composite	Annually (Oct)
Di-N-Octyl Phthalate	µg/L	24-hr Composite	Annually (Oct)
Benzo(a)Anthracene	µg/L	24-hr Composite	Annually (Oct)
Benzo(ghi)Perylene	µg/L	24-hr Composite	Annually (Oct)
P-Chloro-M-Cresol	µg/L	24-hr Composite	Annually (Oct)

Parameter	Units	Sample Type	Min. Sampling Frequency
2-Chlorophenol	µg/L	24-hr Composite	Annually (Oct)
2,4-Dichlorophenol	µg/L	24-hr Composite	Annually (Oct)
2,4-Dimethylphenol	µg/L	24-hr Composite	Annually (Oct)
4,6-Dinitro-O-Cresol	µg/L	24-hr Composite	Annually (Oct)
2-Nitrophenol	µg/L	24-hr Composite	Annually (Oct)
4-Nitrophenol	µg/L	24-hr Composite	Annually (Oct)
Pentachlorophenol	µg/L	24-hr Composite	Annually (Oct)
Phenol	µg/L	24-hr Composite	Annually (Oct)
1,1-Dichloroethane	µg/L	24-hr Composite	Annually (Oct)
Chloroethane	µg/L	24-hr Composite	Annually (Oct)
Endrin Aldehyde	µg/L	24-hr Composite	Annually (Oct)
Trans-1,2-Dichloroethylene	µg/L	24-hr Composite	Annually (Oct)
1,2-Dichloropropane	µg/L	24-hr Composite	Annually (Oct)
1,3-Dichloropropylene	µg/L	24-hr Composite	Annually (Oct)
Methylene Chloride	µg/L	24-hr Composite	Annually (Oct)
2-Chloroethyl Vinyl Ether	µg/L	24-hr Composite	Annually (Oct)

V. WHOLE EFFLUENT TOXICITY TESTING REQUIREMENTS

A. Acute Toxicity Testing

Compliance with acute toxicity objective (TUa) shall be determined using a USEPA approved protocol as provided in 40 CFR PART 136 (U.S. EPA's *Methods for Measuring the Acute Toxicity of Effluents and Receiving Waters to Freshwater and Marine Organisms*, EPA-821-R-02-012, or subsequent editions). Acute toxicity monitoring shall be conducted using marine test species instead of freshwater species when measuring compliance (2005 Ocean Plan, Appendix III, *Standard Monitoring Procedures*).

Acute Toxicity (TUa) = 100/96-hr LC 50. LC 50 (percent waste giving 50% survival of test organisms) shall be determined by 96-hour static renewal tests. The Discharger shall use one of the approved marine test species identified in EPA-821-R-02-012, preferably using Silversides (Menidia beryllina); however, other approved marine test species in EPA-821-R-02-012 may be used with sufficient justification by the Discharger and approval by the Executive Officer.

If the effluent is to be discharged to a marine system (e.g., salinity values in excess of 1,000 mg/L) originates, entirely or in part, from a freshwater supply, salinity of the effluent must be increased with dry ocean salts (e.g., FORTY FATHOMS®) to match salinity of the receiving water. This modified effluent shall then be tested using marine species.

Reference toxicant tests shall be conducted concurrently with the effluent sample tests. Both tests must satisfy the test acceptability criteria specified in the reference cited above. If the test acceptability criteria are not achieved or if toxicity is detected, the sample shall be retaken and retested within 5 days of the failed sampling event.

The retest results shall be reported in accordance with the chapter on report preparation and in the reference cited above, and the results shall be attached to the next monitoring report.

When it is not possible to measure the 96-hour LC 50 due to greater than 50 percent survival of the test species in 100 percent waste, the toxicity concentration shall be calculated by the expression:

$$TUa = [\log(100 - S)]/1.7$$

where S = percentage survival in 100% waste. If S > 99, TUa shall be reported as zero.

B. Chronic Toxicity Testing

The presence of chronic toxicity shall be estimated as specified in Short Term Methods for Estimating the Chronic Toxicity of Effluents and Receiving Waters to West Coast Marine and Estuarine Organisms, EPA-821/600/R-95/136; Short Term Methods for Estimating the Chronic Toxicity of Effluents and Receiving Waters to Marine and Estuarine Organisms, EPA-600-4-91-003; Procedures Manual for Conducting Toxicity Tests developed by the Marine Bioassay Project, SWRCB 1996, 96-1WQ; and/or Short Term Methods for Estimating the Chronic Toxicity of Effluents and Receiving Waters to Marine and Estuarine Organisms, EPA/600/4-87-028 or subsequent editions.

Chronic toxicity measures a sublethal effect (e.g., reduced growth or reproduction) to experimental test organisms exposed to an effluent compared to that of the control organisms.

Chronic Toxicity (TUc) = 100/NOEL.

The no observed effect level (NOEL) is the maximum tested concentration in a medium which does not cause known adverse effects upon chronic exposure in the species in question (i.e., the highest effluent concentration to which organisms are exposed in a chronic test that causes no observable adverse effects on the test organisms; e.g., the highest concentration of a toxicant to which the values for the observed responses are not statistically significantly different from the controls). Examples of chronic toxicity include but are not limited to measurements of toxicant effects on reproduction, growth, and sublethal effects that can include behavioral, physiological, and biochemical effects.

In accordance with the 2005 Ocean Plan, Appendix III, *Standard Monitoring Procedures*, the Discharger shall use the critical life stage toxicity tests specified in the table below to measure TUc. Other species or protocols will be added to the list after State Water Board review and approval.

If the effluent is to be discharged to a marine system (e.g., salinity values in excess of 1,000 mg/L) originates, entirely or in part, from a freshwater supply, salinity of the effluent must be increased with dry ocean salts (e.g., FORTY FATHOMS®) to match salinity of the receiving water. This modified effluent shall then be tested using marine species.

Table E-5. Approved Tests—Chronic Toxicity

Species	Test	Tier[1]	Reference[2]
Giant kelp, *Macrocystis pyrifera*	percent germination; germ tube length	1	a, c
Red abalone, *Haliotis rufescens*	abnormal shell development	1	a, c
Oyster, *Crassostrea gigas*; mussels, *Mytilus spp*.	abnormal shell development; percent survival	1	a, c
Urchin, *Strongylocentrotus purpuratus*; sand dollar, *Dendraster excentricus*	percent normal development	1	a, c
Urchin, *Strongylocentrotus purpuratus*; sand dollar, *Dendraster excentricus*	percent fertilization	1	a, c
Shrimp, *Homesimysis costata*	percent survival; growth	1	a, c
Shrimp, *Mysidopsis bahia*	percent survival; fecundity	2	b, d
Topsmelt, *Atherinops affinis*	larval growth rate; percent survival	1	a, c
Silverside, *Menidia beryllina*	larval growth rate; percent survival	2	b, d

1 - First tier methods are preferred for compliance monitoring. If first tier organisms are not available, the Discharger can use a second tier test method following approval by the Regional Water Board.

2 - Protocol References:

a. Chapman, G.A., D.L. Denton, and J.M. Lazorchak. 1995. Short-term Methods for Estimating the Chronic Toxicity of Effluents and Receiving Waters to West Coast Marine and Estuarine Organisms. USEPA Report No. EPA/600/R-95/136.

b. Klemm, D.J., G.E. Morrison, T.J. Norberg-King, W.J. Peltier, and M.A. Heber. 1994. Short-term Methods for Estimating the Chronic Toxicity of Effluents and Receiving Water to Marine and Estuarine Organisms. USEPA Report No. EPA-600-4-91-003.

c. SWRCB 1996. Procedures Manual for Conducting Toxicity Tests Developed by the Marine Bioassay Project. 96-1WQ.

d. Weber, C.I., W.B. Horning, I.I., D.J. Klemm, T.W. Nieheisel, P.A. Lewis, E.L. Robinson, J. Menkedick and F. Kessler (eds). 1998. Short-term Methods for Estimating the Chronic Toxicity of Effluents and Receiving Waters to Marine and Estuarine Organisms. EPA/600/4-87/028. National Information Service, Springfield, VA.

Dilution and control waters shall be obtained from an area of the receiving waters, typically upstream, which is unaffected by the discharge. Standard dilution water can be used, if the receiving water itself exhibits toxicity or if approved by the Regional Water Board. If the dilution water used in testing is different from the water in which the test organisms were cultured, a second control sample using culture water shall be tested.

A minimum of three test species with approved test protocols with approved test protocols shall be used to measure compliance with the toxicity objective. The test species shall include a vertebrate, an invertebrate, and an aquatic plant. The sensitivity of test organisms to a reference toxicant shall be determined concurrently with each bioassay and reported with the test results. After a screening period of no less than three tests, monitoring may be reduced to the most sensitive species.

The Discharger shall include a full report of toxicity test results with the regular monthly monitoring report and include the following information.

a. toxicity test results,

b. dates of sample collection and initiation of each toxicity test, and

c. acute and/or chronic toxicity discharge limitations (or value).

Toxicity test results shall be reported according to the appropriate guidance - Methods for Measuring the Acute Toxicity of Effluents and Receiving Waters to Freshwater and Marine Organisms, Fifth Edition, USEPA Office of Water, EPA-821-R-02-012 (2002) or the latest edition, or Short Term Methods for Estimating the Chronic Toxicity of Effluents and Receiving Waters to Freshwater and Marine Organisms, EPA-821-R-02-012 (2002) or subsequent editions.

If the initial investigation TRE workplan is used to determine that additional (accelerated) toxicity testing is unnecessary, these results shall be submitted with the monitoring report for the month in which investigations conducted under the TRE workplan occurred.

Within 14 days of receipt of test results exceeding a chronic toxicity discharge limitation, the Discharger shall provide written notification to the Executive Officer of:

a. Findings of the TRE or other investigation to identify the cause(s) of toxicity,

b. Actions the Discharger has taken/will take, to mitigate the impact of the discharge and to prevent the recurrence of toxicity.

When corrective actions, including a TRE, have not been completed, a schedule under which corrective actions will be implemented, or the reason for not taking corrective action, if no action has been taken.

C. Toxicity Identification / Reduction Evaluations

If the discharge consistently exceeds an effluent limitation for toxicity specified by Section IV of this Order/Permit, the Discharger shall conduct a Toxicity Reduction Evaluation (TRE) in accordance with the Discharger's TRE Workplan.

A TRE is a study conducted in a step-wise process designed to identify the causative agents of effluent or ambient toxicity, isolate the sources of toxicity, evaluate the effectiveness of toxicity control options, and then confirm the reduction in toxicity. The first steps of the TRE consist of the collection of data relevant to the toxicity, including additional toxicity testing, and an evaluation of facility operations and maintenance practices, and best management practices. A TOXICITY IDENTIFICATION EVALUATION (TIE) may be required as part of the TRE, if appropriate. A TIE is a set of procedures to identify the specific chemical(s) responsible for toxicity. These procedures are performed in three phases - characterization, identification, and confirmation using aquatic organism toxicity tests. The TRE shall include all reasonable steps to identify the source of toxicity. The Discharger shall take all reasonable steps to reduce toxicity to the required level once the source of toxicity is identified.

The Discharger shall maintain a TRE Workplan, which describes steps that the Discharger intends to follow in the event that a toxicity effluent limitation established by this Order/Permit is exceeded in the discharge. The workplan shall be prepared in accordance with current technical guidance and reference material, including EPA/600/2-88-070 (for industrial discharges) or EPA/600/2-88/062 (for municipal discharges), and shall include, at a minimum:

1. Actions that will be taken to investigate/identify the causes/sources of toxicity,

2. Actions that will be evaluated to mitigate the impact of the discharge, to correct the non-compliance, and/or to prevent the recurrence of acute or chronic toxicity (this list of action steps may be expanded, if a TRE is undertaken), and

3. A schedule under which these actions will be implemented.

When monitoring measures toxicity in the effluent above the limitation established by this Order/Permit, the Discharger shall resample immediately, if the discharge is continuing, and retest for whole effluent toxicity. Results of an initial failed test and results of subsequent monitoring shall be reported to the Executive Officer (EO) as soon as possible following receipt of monitoring results. The EO will determine whether to initiate enforcement action, whether to require the Discharger to implement a TRE, or to implement other measures. The Discharger shall conduct a TRE giving due consideration to guidance provided by the *USEPA's Toxicity Reduction Evaluation Procedures, Phases 1, 2, and 3* (EPA document nos. EPA 600/3-88/034, 600/3-88/035, and 600/3-88/036, respectively). A TRE, if necessary, shall be conducted in accordance with the following schedule.

Table E-6. Toxicity Reduction Evaluation—Schedule

Action Step	When Required
Take all reasonable measures necessary to immediately reduce toxicity, where the source is known.	Within 24 hours of identification of noncompliance.
Initiate the TRE in accordance to the Workplan.	Within 7 days of notification by the EO
Conduct the TRE following the procedures in the Workplan.	Within the period specified in the Workplan (not to exceed one year, without an approved Workplan)
Submit the results of the TRE, including summary of findings, required corrective action, and all results and data.	Within 60 days of completion of the TRE
Implement corrective actions to meet Permit limits and conditions.	To be determined by the EO

VI. LAND DISCHARGE MONITORING REQUIREMENTS

This section of the standardized permit form is not applicable to this Discharger.

VII. RECLAMATION MONITORING REQUIREMENTS

The Discharger shall comply with Waste Discharge Requirements Order No. 91-03 for reclaimed water production. The Discharger shall comply with applicable State and local monitoring requirements regarding the production and use of reclaimed wastewater, including requirements established by the California Department of Public Health at title 22, sections 60301 - 60357 of the California Code of Regulations, Water Recycling Criteria. The Goleta Water District, as the primary user of reclaimed water, is responsible for the distribution and use of reclaimed water to the general public under Order No 91-04.

VIII. RECEIVING WATER MONITORING REQUIREMENTS

A. Surf-Zone Monitoring

Surf zone monitoring is conducted at stations A, A1, A2, B, C, D, and E to determine compliance with water quality standards, to assess bacteriological conditions in areas used for water contact recreation, where shellfish and/or kelp may be harvested for human consumption, and to assess aesthetic conditions for general recreational uses.

Monitoring shall include observations of wind (direction and speed), weather (e.g., cloudy, sunny, rainy), sea state (height of swells and waves), longshore current (e.g., direction), tidal condition (high, slack, low), water discoloration, floating grease and oil, turbidity, odor, and materials of sewerage origin in the water shall be recorded and

reported. Surf zone samples shall be collected as far seaward as possible within the surf zone. All surf zone stations shall be monitored as follows:

Table E-7. Surf Zone Monitoring

Parameter	Units	Sample Type	Minimum Frequency of Sampling/Analysis
Total Coliform	MPN/100 mL	Grab	Weekly
Fecal Coliform	MPN/100 mL	Grab	Weekly
Enterococcus	MPN/100 mL	Grab	Weekly
Temperature	^{o}C	Grab	Weekly

Samples influenced by discharges from Goleta Slough, flood control channels, or samples collected on a rainy day and up to three days after a large rain are excluded from the calculation of compliance with receiving water limits.

B. Near-Shore Monitoring

Nearshore monitoring is conducted at stations K1, K2, K3, K4, and K5 to determine compliance with water quality standards, to assess bacteriological conditions in areas used for water contact recreation (e.g., swimming, SCUBA diving) and where shellfish and/or kelp may be harvested for human consumption, and to assess aesthetic conditions for general recreational uses (e.g., boating).

Monitoring shall include observations of wind (direction and speed), weather (e.g., cloudy, sunny, rainy), sea state (height of swells and waves), longshore current (e.g., direction), tidal condition (high, slack, low), water discoloration, floating grease and oil, turbidity, odor, and materials of sewerage origin in the water shall be recorded and reported. Water samples shall be collected between the hours of 7 AM and 6 PM at stations K1, K2, K3, K4, and K5. The water column parameters to be monitored at 1.0 meter below the surface, mid depth, and 1.0 meter above the bottom are:

Table E-8. Near-Shore Monitoring

Parameter	Units	Sample Type	Minimum Frequency of Sampling/Analysis
Total Coliform	MPN/100 mL	Grab	Quarterly
Fecal Coliform	MPN/100 mL	Grab	Quarterly
Enterococcus	MPN/100 mL	Grab	Quarterly
Temperature	^{o}C	Grab	Quarterly
Water Depth	meters	Measured	Quarterly

C. Ocean Station Monitoring

Offshore monitoring of the water column is conducted at ocean stations B1, B2, B3, B4, B5, and B6, and plume stations WC-ZID and WC-l00m to determine compliance with water quality standards and to document any water quality impacts that might result

from the waste discharge within the ZID and beyond the ZID, as compared to water quality at the reference station (B6).

Data may be obtained using multiple electronic probes (as appropriate) to measure parameters (i.e., dissolved oxygen, pH, salinity, temperature, and natural light) through the entire water column, or by measurement of discrete samples collected at 1.0 meter below the surface, 3 meter intervals within the water column, and 1.0 meter above the bottom.

Water samples shall be collected between the hours of 7 AM and 6 PM at stations B1, B2, B3, B4, B5, B6, WC-ZID, and WC-100M. The water column parameters to be monitored are:

Table E-9. Ocean Station Monitoring

Parameter	Units	Sample Location	Minimum Frequency of Sampling/Analysis
Total Coliform	MPN/100 mL	Various[2]	Quarterly
Fecal Coliform	MPN/100 mL	Various[2]	Quarterly
Enterococcus	MPN/100 mL	Various[2]	Quarterly
Temperature	^{o}C	Water column	Quarterly
Dissolved Oxygen	mg/L	Water column	Quarterly
Natural Light	light transmissivity	Water column	Quarterly
pH	pH units	Water column	Quarterly
Salinity	ppt	Water column	Quarterly
Grease and Oil	Visual	Surface	Quarterly
Discoloration	Visual	Surface	Quarterly
Floating Particles	Visual	Surface	Quarterly

D. Notification and Monitoring Procedures in the Event of Disinfection Failure

The Discharger shall notify the California Department of Public Health Preharvest Shellfish Sanitation Unit (CDPH), the Regional Water Board, the Santa Barbara County Environmental Health Services Department, and each certified commercial shellfish grower located in the Santa Barbara Nearshore Aquaculture Area as set forth in a list provided by CDPH, in the event of a malfunction of the Discharger's wastewater treatment facility's disinfection process which results in a potential or actual discharge of inadequately disinfected effluent into the Santa Barbara Channel (an "Event"). Such notification by the Discharger shall be by phone to the numbers provided to the Discharger by CDPH. If the Discharger becomes aware of the Event between the hours of 6:00 a.m. and 5:00 p.m., notification shall be given within four (4) hours of the time

[2] Collected at 1.0 meter below the surface, mid depth, and 1.0 meter above the bottom.

that the Discharger becomes aware of the Event. If the Discharger becomes aware of the Event after 5:00 p.m., notification shall be given by 10:00 a.m. the next day.

By providing notification of an Event as specified above, the Discharger shall not be deemed to have concluded that the Event will or may impact any commercial shellfish growing areas or require the closure of any growing areas. Any decision or recommendation to close a growing area in response to a notification of an Event by the Discharger shall be made by CDPH and/or the affected or potentially affected certified commercial shellfish grower(s). The Discharger shall have no liability (including but not limited to liability for lost sales, profits or interpretation of business operations) arising from a decision by CDPH or a shellfish grower to close a growing area in response to a notification of an Event where no actual adverse impact on the growing area from the Event has been established. Each certified commercial shellfish grower located in the Santa Barbara Nearshore Aquaculture Area shall execute a written document acknowledging the foregoing limitation on the Discharger's liability in connection with its Event notification obligations set forth above, and the Discharger shall not be required to provide any notification of an Event to any shellfish grower who fails to execute such written acknowledgement.

IX. BENTHIC MONITORING

A. Benthic Sediment Monitoring - Annually (October), sediment monitoring shall be conducted at stations B1, B2, B3, B4, B5, and B6 to assess the temporal and spatial occurrence of pollutants in local marine sediments and to evaluate the physical and chemical quality of the sediments in relation to the outfall. At stations B1, B2, B3, B4, B5, and B6, one (1) grab sample shall be collected using a 0.1 m^2 modified Van Veen grab sampler; the top 2 cm of materials from each grab sample shall be analyzed individually for the following parameters:

Table E-10. Benthic Sediment Monitoring

Parameter	Units	Minimum Frequency of Sampling/Analysis
Sediment particle size[3]	phi size (% volume)	Annually
Grease and Oil	µg/g	Annually
Total Kjeldahl Nitrogen	µg/g	Annually
Total Organic Carbon	µg/g	Annually
Acid Volatile Sulfide	µg/g	Annually
Aluminum	µg/g	Annually
Antimony	µg/g	Annually
Arsenic	µg/g	Annually
Cadmium	µg/g	Annually
Chromium	µg/g	Annually

[3] Report percent (%) weight in relation to phi size.

Parameter	Units	Minimum Frequency of Sampling/Analysis
Copper	µg/g	Annually
Iron	µg/g	Annually
Lead	µg/g	Annually
Mercury	µg/g	Annually
Nickel	µg/g	Annually
Selenium	µg/g	Annually
Silver	µg/g	Annually
Tin	µg/g	Annually
Zinc	µg/g	Annually
Aldrin	ng/g	Annually
Chlordane[4]	ng/g	Annually
DDT[5]	ng/g	Annually
Dieldrin	ng/g	Annually
Heptachlor[6]	ng/g	Annually
Heptachlor[25] epoxide	ng/g	Annually
Hexachlorobenzene	ng/g	Annually
HCH[7]	ng/g	Annually
Mirex	ng/g	Annually
PAHs[8]	ng/g	Annually
1-methylnaphthalene	ng/g	Annually
1-methylphenanthrene	ng/g	Annually
2-methylnaphthalene	ng/g	Annually
2,6-dimethylnaphthalene	ng/g	Annually
1,6,7-trimethylnaphthalene	ng/g	Annually
Acenaphthene	ng/g	Annually
Biphenyl	ng/g	Annually

[4] CHLORDANE shall mean the sum of chlordane-alpha, chlordane-gamma, chlordene-alpha, chlordene-gamma, nonachlor-alpha, nonachlor-gamma, and oxychlordane.
[5] DDT shall mean the sum of 4,4'-DDT, 2,4'-DDT, 4,4'DDE, 2,4'-DDE, 4,4'-DDD, and 2,4'-DDD.
[6] HEPTACHLOR formerly meant the sum of heptachlor and heptachlor epoxide – each specie is now listed.
[7] HCH shall mean the sum of the alpha, beta, gamma (lindane), and delta isomers of hexachlorocyclohexane.
[8] PAHs (polynuclear aromatic hydrocarbons) shall mean the sum of acenaphthylene, anthracene, 1,2-benzanthracene, 3,4-benzofluoranthene, benzo[k]fluoranthene, 1,12-benzoperylene, benzo[a]pyrene, chrysene, dibenzo[ah]anthracene, fluorene, indeno[1,2,3-cd]pyrene, phenanthrene, and pyrene.

Parameter	Units	Minimum Frequency of Sampling/Analysis
Naphthalene	ng/g	Annually
Benzo(a)anthracene	ng/g	Annually
Benzo(b)fluoranthene	ng/g	Annually
Benzo(e)pyrene	ng/g	Annually
Benzo(ghi)perylene	ng/g	Annually
Fluoranthene	ng/g	Annually
Perylene	ng/g	Annually
PCBs[9]	ng/g	Annually

Sediment samples analyzed for parameters other than organic priority pollutants shall be placed in air-tight polyethylene or glass containers. Separate subsamples for dissolved sulfides analysis shall be placed in small (100-200 mL) wide-mouth bottles and preserved with zinc acetate. The preservative must be carefully mixed with the sediment sample. Sediment samples collected for organic priority pollutant analysis should be placed in air-tight glass containers. All containers should be completely filled by the sediment sample and air bubbles should not be trapped in the containers. Samples shall be stored immediately at 2 to 4°C and not frozen or dried. Total sample storage time shall not exceed two (2) weeks.

When processing samples for analysis, macrofauna and large remnants greater than 0.25 inches (0.64 cm) should be removed, taking care to avoid contamination.

Sediment samples shall be analyzed according to Quality Assurance and Quality Control (QA/QC) for 301(h) Monitoring Programs: Guidance on Field and Laboratory Methods (EPA 430/9-86-004, 1987) and Analytical Methods for EPA Priority Pollutants and 301(h) Pesticides in Estuarine and Marine Sediments (EPA 503-6-90-004), 1986), or the most recent editions.

All sediment results shall be reported in the raw form and expressed on a dry weight basis. For all non-detect results, parameter detection limits shall be reported. Dry weight concentration target detection levels are indicated for National Oceanic and Atmospheric Administration (NOAA) National Status and Trends Program analyses.

Chemical results normalized to the percent fine sediment fraction (i.e., phi 4), total organic carbon (TOC), etc., for analytical comparisons are calculated as follows:

$$\text{normalized result} = \frac{\text{raw result}}{\%\ X \text{ (as a decimal)}}$$

[9] PCBs (polychlorinated biphenyls) shall mean the sum of chlorinated biphenyls whose analytical characteristics resemble those of Aroclor-1016, Aroclor-1221, Aroclor-1232, Aroclor-1242, Aroclor-1248, Aroclor-1254 and Aroclor-1260.

The annual report on benthic monitoring shall include a complete discussion of benthic sediment survey results and (possible) influence of the discharge on sediment conditions in the study area. The discussion should be based on graphical, tabular, and/or appropriate statistical analyses of spatial and temporal patterns observed for raw and normalized sediment parameters. The annual report should also present an analysis of natural variation in sediment conditions, etc., which could influence the validity of study results. The Discharger's sediment results may also be compared with the results of other applicable studies, numeric protective levels, etc., as appropriate. Survey results shall be compared to pre-discharge and/or historical data using appropriate statistical methods.

B. Benthic Community Monitoring

Benthic infaunal organisms shall be monitored annually, in October, at the benthic monitoring stations described in Section II, *Monitoring Locations*, above. Benthic infaunal monitoring shall assess the temporal and spatial status of local benthic communities in relation to the outfall. Sampling shall be conducted as follows:

1. Collection: Five replicate samples shall be collected at each station using a 0.1 m^2 Van Veen grab sampler.

2. For benthic infauna analyses, each replicate sample shall be passed through a 1 mm screen, and the organisms retained and preserved as appropriate for subsequent identification. It is recommended that sample preservation, sample processing, and data analyses be conducted according to Quality Assurance and Quality Control (QA/QC) for 301(h) Monitoring Programs: Guidance on Field and Laboratory Methods (EPA 430/9-86-004, 1987).

3. Benthic infauna from each replicate sample shall be counted and identified to the lowest possible taxon. For each replicate sample, number of individuals, number of species, and number of individuals per species, and within each major taxonomic group (polychaetes, molluscs, crustaceans, echinoderms, and all other macroinvertebrates) shall be recorded.

4. The names and qualifications of persons handling and identifying benthic fauna shall be given in all data reports. A voucher collection shall be established containing a sample of each taxon identified to species. These vouchers will be maintained by the Discharger during this permit period and deposited in archival institutions at permit termination. All remaining organisms from infaunal samples will be stored as separate replicate samples by the Discharger for ten (10) years after the effective date of this permit.

5. The annual report shall include a complete discussion of benthic infaunal survey results and (possible) influence of the outfall on benthic infauna communities in the study area. The discussion should be based on graphical, tabular, and/or appropriate statistical analyses of spatial and temporal patterns. Temporal trends in the number of

individuals, number of species, number of individuals per species, and community structure indices, species richness (S), Margalef index (d), Shannon-Wiener index (H'), Brillouin index (h), Simpson's Index (SI), Swartz's dominance, Benthic Response Index (BRI), and Infaunal Trophic Index (ITI) shall be reported. Classification analyses, using Bray-Curtis similarity index, and the group average clustering strategy, or the flexible sorting strategy, should be conducted. The annual report should also present an analysis of natural community variation including the effects of different sediment conditions, oceanic seasons, and water temperatures, etc., that could influence the validity of study results. Survey results shall be compared to pre-discharge and/or historical data using appropriate statistical methods.

X. TRAWL SURVEY

Annually (October), duplicate trawl sampling is conducted at stations TB3 and TB6 to assess fish and epibenthic macroinvertebrate populations, to determine whether significant differences exist between populations at the outfall area (station TB3) and at the reference area (station TB6), and to assess bioaccumulation of toxic pollutants.

A standardized trawl shall be a Marinovich 25 ft head rope otter trawl, towed along the diffuser mid-point depth (approximately 25 m isobath) for a minimum duration of ten minutes at a uniform speed of between 2.0 and 2.5 knots. Necessary steps shall be taken to ensure that both trawls at each station do not sweep the stations sampled for sediments and benthic biota and that the second trawl at each station covers the same distance but does not sweep the same path as the first trawl. Trawling distance, duration, and direction shall be reported.

Fish and epibenthic macroinvertebrates collected by each trawl shall be identified to the lowest possible taxon. The following data shall be collected and reported for each duplicate trawl at each station: number of individuals (fish), number of individuals (epibenthic macroinvertebrates), number of species (fish), number of species (epibenthic macroinvertebrates), number of individuals per species, wet weight of each species, number per size class per species (fish), standard length of each individual (fish), and abnormalities and disease symptoms (e.g., fin erosion, external and internal lesions, and tumors).

The names and qualifications of persons handling and identifying fish and epibenthic macroinvertebrates shall be given in all data reports. A voucher collection shall be established containing a sample of each taxon identified to species. These vouchers will be maintained by the Discharger during this permit period and deposited in archival institutions at permit termination. After selection of vouchers, trawl materials shall be returned to the sea during the field survey.

The annual report on fish and epibenthic macroinvertebrate monitoring shall include a complete discussion of trawl survey results and (possible) influence of the outfall on fish and epibenthic macroinvertebrate communities in the study area. The discussion should be based on graphical, tabular, and/or appropriate statistical analyses (see

section XII, Data Analysis) of spatial and temporal patterns observed for number of individuals, number of species, number of individuals per species, etc., and community structure indices: species richness (S), Margalef index (d), Shannon-Wiener index (H'), Brillouin index (h), Simpson's Index (SI), and Swartz's dominance. Classification analyses, using the Bray-Curtis similarity index, and the group average clustering strategy (i.e., the unweighted pair-group method using arithmetic averages), or the flexible sorting strategy, should be conducted. The annual report should also present an analysis of natural variation in fish and epibenthic macroinvertebrate communities including the effects of different sediment conditions, oceanic seasons, and water temperatures, etc., that could influence the validity of study results. Survey results shall be compared to pre-discharge and/or historical data using appropriate statistical methods.

XI. BIOACCUMULATION MONITORING

A. Fish

Annually (October), tissues of commercially and/or ecologically important fish species common to both trawl stations shall be analyzed for specified parameters (see section XI.C, Chemical Analysis) at stations TB3 and TB6. For tissue analyses, three (3) composite samples shall be taken from the combined catch of duplicate trawls at station TB3 and three (3) composite samples shall be taken from the combined catch of duplicate trawls at station TB6. If duplicate trawls do not yield sufficient amounts of organisms to allow for tissue analyses, fish may be caught using lines and/or traps.

Fish tissues analyzed shall be dorsal muscle and liver. Three composite samples shall be prepared for both of these tissues at stations TB3 and TB6. Each composite sample shall consist of tissues taken from at least six (6) individuals representing one species. When feasible, tissues from organisms of the same species should be analyzed from year to year.

The following commercially and/or ecologically important fish are suggested for bioaccumulation analysis:

- Pacific sand dab (Citharichthys sordidus);
- Speckled sand dab (Citharichthys stigmaeus);
- Yellowchin sculpin (Icelinus quardreseriatus)
- Bigmouth sole (Hippoglossina stomata);
- Dover sole (Microstomus pacificus); and
- Hornyhead turbot (Pleuronichthys verticalis).

Depending on distribution and abundance, other fish species may also be approved by the Regional Water Board and EPA.

B. Caged Mussels (Mytilus Californianus)

Annually (October), tissues of the California mussel, Mytilus californianus, shall be analyzed for specified parameters (see section XI.C, Chemical Analysis) to assess whether organisms in the vicinity of the discharge are bioaccumulating/bioconcentrating toxic pollutants [40 CFR 125.62(b)(1)(ii)]. This assessment shall be made according to methods and techniques approved by the Regional Water Board and USEPA, and should be based primarily on techniques developed by the National Mussel Watch Program and the State Mussel Watch Program. The program may be adjusted to effectively fulfill the objective of assessing whether the discharge is causing sublethal adverse biological effects, or otherwise altering the natural environment. All changes are subject to review and approval by the Regional Water Board and USEPA.

Mussels to be used for offshore bioaccumulation monitoring should be collected as high in the intertidal zone as possible to minimize variability in the condition of individuals. All individuals should be approximately the same size (i.e., 5 - 8 cm). Prior to deployment, 70 individuals representing the "time zero" (T_o) population shall be composited and analyzed as outlined below. At stations B3, B4, and B6, mussels shall be deployed at a depth of 16 meters, for a period of 90 to 100 days. At least 70 individuals shall be deployed at each station; it is recommended that more than 70 individuals be deployed at each station to meet all sampling requirements. Mussels may be cleaned during the deployment period to minimize mortality due to biofouling and predation.

At each station, 70 mussels shall be divided into four (4) composite samples for analysis. One (1) composite sample comprised of 25 individuals shall be used to assess the biological effects of exposure (e.g., incidence of disease/parasitism, and shell length). Three (3) composite samples each comprised of 15 individuals shall be analyzed for the specified parameters (see section XI.C, Chemical Analysis). All analyses shall be conducted on undepurated individuals.

C. Chemical Analysis

Annually (October), the following parameters shall be measured in fish and California mussel (Mytilus californianus) tissues, as specified below. Reported results shall be based on wet and dry weight concentrations. For all non-detect results, detection limits must be reported. Dry weight concentration target detection levels are indicated for NOAA National Status and Trends Program analyses. At each station, all chemical parameters shall be analyzed and reported only for composite samples comprised of 15 individuals of M. californianus and composite samples of target fish species.

Table E-11. Bioaccumulation Chemical Analysis

Parameter	Units
Number of Individuals per Composite Sample	--

Parameter	Units
Survival[10]	--
Shell Length[11]	mm
Shell Cavity Weight[11]	g
Condition Factor[11]	--
Gonadal Index[11]	--
Arsenic	µg/g
Cadmium	µg/g
Chromium	µg/g
Copper	µg/g
Lead	µg/g
Mercury	µg/g
Nickel	µg/g
Selenium	µg/g
Silver	µg/g
Zinc	µg/g
Aldrin	ng/g
Chlordane[12]	ng/g
DDT[13]	ng/g
Dieldrin	ng/g
Heptachlor	ng/g
Hexachlorobenzene	ng/g
HCH[14]	ng/g
Mirex	ng/g
PAHs[15]	ng/g
1-methylnaphthalene	ng/g
1-methylphenanthrene	ng/g
2-methylnaphthalene	ng/g
2,6-dimethylnaphthalene	ng/g
1,6,7-trimethylnaphthalene	ng/g
Acenaphthene	ng/g
Biphenyl	ng/g
Naphthalene	ng/g
Benzo(a)anthracene	ng/g
Benzo(b)fluoranthene	ng/g
Benzo(e)pyrene	ng/g

[10] At each station, parameter shall be reported only for all deployed individuals of M. californianus.
[11] At each station, parameter shall be analyzed and reported only for composite samples comprised of 25 individuals of M. californianus.
[12] CHLORDANE shall mean the sum of chlordane-alpha, chlordane-gamma, chlordene-alpha, chlordene-gamma, nonachlor-alpha, nonachlor-gamma, and oxychlordane.
[13] DDT shall mean the sum of 4,4'-DDT, 2,4'-DDT, 4,4'DDE, 2,4'-DDE, 4,4'-DDD, and 2,4'-DDD.
[14] HCH shall mean the sum of the alpha, beta, gamma (lindane), and delta isomers of hexachlorocyclohexane.
[15] PAHs (polynuclear aromatic hydrocarbons) shall mean the sum of acenaphthylene, anthracene, 1,2-benzanthracene, 3,4-benzofluoranthene, benzo[k]fluoranthene, 1,12-benzoperylene, benzo[a]pyrene, chrysene, dibenzo[ah]anthracene, fluorene, indeno[1,2,3-cd]pyrene, phenanthrene, and pyrene.

Parameter	Units
Benzo(ghi)perylene	ng/g
Fluoranthene	ng/g
Perylene	ng/g
PCBs[16]	ng/g

The annual report on bioaccumulation monitoring shall include a complete discussion of bioaccumulation results and (possible) influence of the outfall on fish and M. californianus tissue concentrations in the study area. The discussion should be based on graphical, tabular, and/or appropriate statistical analyses (see section XII, Data Analysis) of spatial and temporal patterns observed in tissue concentrations. The annual report should also present an analysis of natural variation in tissue concentrations that could influence the validity of study results. The Discharger's bioaccumulation results may also be compared with the results of other applicable studies, numeric protective levels (e.g., U.S. Food and Drug Administration Action Limits and Warning Levels, National Academy of Sciences Predator Protection Levels for Aquatic Wildlife and Marine Wildlife, Medians of International Standards), etc., as appropriate. Survey results shall be compared to pre-discharge and/or historical data using appropriate statistical methods.

XII. DATA ANALYSIS

Data analyses which may be required to determine temporal and spatial trends (within and between stations) in the marine environment include:

[16] PCBs (polychlorinated biphenyls) shall mean the sum of chlorinated biphenyls whose analytical characteristics resemble those of Aroclor-1016, Aroclor-1221, Aroclor-1232, Aroclor-1242, Aroclor-1248, Aroclor-1254 and Aroclor-1260.

A. Graphical and/or Tabular Analyses - station means, ranges, standard deviations, and 95% confidence limits

B. Univariate Statistical Analyses
1. Analysis of Variance (ANOVA) - parametric test
2. Kruskal-Wallis test - nonparametric test
3. Other test methods as appropriate

C. Multivariate Statistical Analyses
1. Classification analyses - similarity and cluster analyses
2. Other test methods as appropriate

D. Biological Indices
1. Species richness (S) - species number
2. Margalef's species richness (d) - measure of species number
3. Shannon-Wiener diversity (H) - combined measure of species and evenness
4. Brillouin diversity (H) - combined measure of species and evenness
5. Simpson's Index (SI) - measure of dominance
6. Swartz's dominance - measure of dominance
7. Infaunal Trophic Index (ITI) - Southern California Bight benthic infauna only
8. Benthic Response Index (BRI) – average pollutant tolerance

XIII. BIOSOLIDS MONITORING

The following information shall be submitted with the Annual Report required by Standard Provision C.16. Adequate detail should be included to characterize biosolids in accordance with 40 CFR 503.

1. A representative sample of residual solids (biosolids) shall be obtained from the last point in the handling process (i.e., in the drying beds just prior to removal). All constituents shall be analyzed annually for total concentrations for comparison with TTLC criteria. The Waste Extraction Test shall be performed on any constituent when the total concentration of the waste exceeds ten times the STLC limit for that substance. Twelve (12) discrete representative samples shall be collected at separate locations in the biosolids ready for disposal. These 12 samples shall be composited to form one (1) sample for constituent analysis. For accumulated, previously untested biosolids, the Discharger shall develop a representative sampling plan including number and location of sampling points, and collect representative samples. The analysis shall test for the metals required in 40 CFR 503.16 (for land application) or 503.26 (for surface disposal), using the methods in *Test Methods for Evaluating Solid Waste, Physical/Chemical Methods* (EPA Publication SW-846, all applicable editions and updates), as required in 503.8(b)(4), at the minimum frequencies established therein, provided in the table below.

Table E-12. Amount of Biosolids and Frequency for Analysis

Amount[1] (dry metric tons/ 365-day period)	Frequency[2]
Greater than zero, but less than 290	Once per year.
Equal to or greater than 290 but less than 1500	Once per quarter (four times per year)
Equal to or greater than 1500 but less than 15,000	Once per sixty days (six times per year)
Greater than 15,000	Once per month (twelve times per year)

1 - For land application, either the amount of bulk biosolids applied to the land or the amount prepared for sale or give-away in a bag or other container for application to the land (dry weight basis). If the Discharger's biosolids are directly land applied without further treatment by another preparer, biosolids shall also be tested for organic-N, ammonium-N, and nitrate-N at the frequencies required. For surface disposal, the amount of biosolids placed on an active sludge unit (dry weight basis).
2 - Test results shall be expressed in mg pollutant per kg biosolids on a 100% dry weight basis.

Biosolids shall be analyzed for the constituents in the following table.

Table E-13. Biosolids Monitoring

Constituent	Units	Type of Sample	Sampling/Analysis Frequency
Quantity Removed	Tons or yds^3	Measured	Continual
Pathogen Density			per 40 CFR 503
Location of Reuse/Disposal	General Public or Specific Site		Annually
Moisture Content	%	Grab	Quarterly
Total Kjedldahl Nitrogen	mg/kg (dry)[1]	Grab	Quarterly
Ammonia(N)	mg/kg	Grab	Quarterly
Nitrate(N)	mg/kg	Grab	Quarterly
Total Phosphorus	mg/kg	Grab	Quarterly
Arsenic	mg/kg	Grab	Quarterly
Boron	mg/kg	Grab	Quarterly
Cadmium	mg/kg	Grab	Quarterly
Copper	mg/kg	Grab	Quarterly
Chromium (Hexavalent)	mg/kg	Grab	Quarterly
Lead	mg/kg	Grab	Quarterly
Mercury	mg/kg	Grab	Quarterly
Molybdenum	mg/kg	Grab	Quarterly
Nickel	mg/kg	Grab	Quarterly
Selenium	mg/kg	Grab	Quarterly

Constituent	Units	Type of Sample	Sampling/Analysis Frequency
Silver	mg/kg	Grab	Quarterly
Zinc	mg/kg	Grab	Quarterly
pH	Standard Units	Grab	Annually
Grease and Oil	mg/kg	Grab	Annually
Priority Pollutants (excluding asbestos)	mg/kg	Grab	Annually

1 - Total sample (including solids and any liquid portion) to be analyzed and results reported as mg/kg based on the dry weight of the sample.

2. Prior to land application, the Discharger shall demonstrate that the biosolids meet Class A or Class B pathogen reduction levels by one of the methods listed in 40 CFR 503.32 (unless transferred to another preparer who demonstrates pathogen reduction). Prior to disposal in a surface disposal site, the Discharger shall demonstrate that the biosolids meet Class B levels or shall ensure that the site is covered at the end of each operating day. If pathogen reduction is demonstrated using a "Process to Significantly/Further Reduce Pathogens "(PFRP), the Discharger shall maintain daily records of the operating parameters to achieve this reduction.

   The following applies when biosolids from the Discharger are directly land applied as Class B, without further treatment by a second preparer. If the Discharger demonstrates pathogen reduction by direct testing for fecal coliforms and/or pathogens, samples must be drawn at the frequency in the Amount/Frequency table above. If the Discharger demonstrates Class B pathogen reduction by testing for fecal coliform, at least seven grab samples must be drawn and analyzed during each monitoring event, and a geometric mean calculated from these seven samples. If the Discharger demonstrates Class A pathogen reduction by testing for fecal coliform and/or salmonella, plus one of the PFRP processes or testing for enteric viruses and helminth ova at least four samples of fecal coliform or salmonella must be drawn during each monitoring event. All four samples must meet the limits specified in 40 CFR 503.32(a).

3. For biosolids that are land applied or placed in a surface disposal site, the Discharger shall track and keep records of the operational parameters used to achieve Vector Attraction Reduction requirements in 40 CFR 503.33(b).

4. Class 1 facilities (facilities with pretreatment programs or others designated as Class1 by the regional Administrator) and Federal facilities with greater than five MGD influent flow shall sample biosolids for pollutants listed under Section 307(a) of the CWA (as required in the pretreatment section of the permit for POTWs with pretreatment programs). Class 1 facilities and Federal facilities greater than 5 MGD shall test dioxins/dibenzofurans using a detection limit of less than one pg/g at the time of their next priority pollutant scan if they have not done so within the past five years, and once per five years thereafter.

5. The biosolids shall be tested annually, or more frequently if necessary, to determine hazardousness. All constituents regulated under CCR Title 22, division 5, chapter 11, article 3 shall be analyzed for comparison with Total Threshold Limit Concentration (TTLC) criteria. The Waste Extraction Test shall be performed on any constituent when the total concentration of the waste exceeds ten times the Soluble Threshold Limit Concentration Limit Concentration (STLC) limit for that substance.

6. If biosolids are placed in a surface disposal site (dedicated land disposal site or monofill), a qualified groundwater scientist shall develop a groundwater monitoring program for the site, or shall certify that the placement of biosolids on the site will not contaminate an aquifer.

7. Biosolids placed in a municipal landfill shall be tested by the Paint Filter Liquids Test (EPA Method 9095) at the frequency determined by Table E-12, or more often if necessary to demonstrate that there are no free liquids.

8. The Discharger, either directly or through contractual agreements with their biosolids management contractors, shall comply with the following notification requirements:

   a. *Notification of non-compliance*. The Discharger shall notify USEPA Region 9, the Regional Water Board, and the Regional Water Board located in the region where the biosolids are used or disposed, of any non-compliance within 24 hours if the non-compliance may seriously endanger health or the environment. For other instances of non-compliance, the Discharger shall notify USEPA Region 9 and the affected Regional Water Boards of any non-compliance in writing within five working days of becoming aware of the non-compliance. The Discharger shall require their biosolids management contractors to notify USEPA Region 9 and the affected Regional Water Boards of any non-compliance within the same time frames.

   b. If biosolids are shipped to another state or Indian lands, the Discharger must send notice at least 60 days prior to the shipment to the permitting authorities in the receiving State or Indian land (the USEPA Regional Office for that area and the State/Indian authorities).

   c. *For land application (in cases where Class B biosolids are directly applied without further treatment):* Prior to reuse of any biosolids from the Discharger's facility to a new or previously unreported site, the Discharger shall notify EPA, the Regional Water Board, and any other affected Regional Water Board. The notification shall include description of the crops or vegetation to be grown, proposed loading rates and determination of agronomic rates.

      If any biosolids within a given monitoring period do not meet 40 CFR 503.13 metals concentrations limits, the Discharger (or its contractor) must pre-notify USEPA, and determine the cumulative metals loading to that site to date, as required in 40 CFR 503.12. The Discharger shall notify the applier of all the applier's requirements under 40 CFR 503, including the requirement that the applier certify that the management practices, site restrictions, and any

applicable vector attraction reduction requirements have been met. The Discharger shall require the applier to certify at the end of 38 months following application of Class B biosolids that the harvesting restrictions in effect for up to 38 months have been met.

d. *For surface disposal:* Prior to disposal to a new or previously unreported site, the Discharger shall notify USEPA and the Regional Water Board. The notice shall include a description and a topographic map of the proposed site, depth to groundwater, whether the site is lined or unlined, site operator, site owner, and any State or local permits. The notice shall describe procedures for ensuring public access and grazing restrictions for three years following site closure. The notice shall include a groundwater monitoring plan or description of why groundwater monitoring is not required.

9. The Discharger shall submit an annual biosolids report to the USEPA Region 9 Biosolids Coordinator and Regional Water Board by February 19th of each year (per USEPA guidance and 40 C.F.R. 503) for the period covering the previous calendar year. This report shall include:

a. Annual biosolids removed in dry tons and percent solids.

b. If appropriate, a narrative description of biosolids dewatering and other treatment processes, including process parameters, including a schematic diagram showing biosolids handling facilities. For example, if drying beds are used, report depth of application and drying time. If composting is used, report the temperature achieved and duration.

c. A description of disposal methods, including the following information as applicable related to the disposal methods used at the facility. If more than one method is used, include the percentage and tonnage of annual biosolids production disposed by each method.

(1) For landfill disposal include: 1) the Regional Water Board WDR numbers that regulate the landfills used, 2) the present classifications of the landfills used, 3) the results of any groundwater monitoring, 4) certifications of management practices, and 5) the names and locations of the facilities receiving biosolids.

(2) For land application include: 1) the location of the site(s), 2) the Regional Water Board's WDR numbers that regulate the site(s), 3) the application rate in lbs/acre/year (specify wet or dry), 4) certifications of management practices and site restrictions, and 5) subsequent uses of the land.

(3) For offsite application by a licensed hauler and composter include: 1) the name, address and USEPA license number of the hauler and composter.

d. Copies of analytical data required by other agencies (i.e. USEPA or county health department) and licensed disposal facilities (i.e. landfill, land application, or composting facility) for the previous year.

e. Descriptions of pathogen reduction methods and vector attraction reduction methods. Including supporting time and temperature data, and certifications, as required in 40 CFR 503.17 and 503.27.

f. Names, mailing address, and street addresses of persons who received biosolids for storage, further treatment, disposal in a municipal waste landfill, or for other use or disposal methods not covered above, and amounts delivered to each.

g. For all biosolids used or disposed at the Discharger's facility, the site and management practice information and certification required in 40 CFR 503.17 and 503.27.

h. For all biosolids temporarily stored, the information required in 40 CFR 503.20 is required to demonstrate temporary storage.

i. Reports shall be submitted to:

Regional Biosolids Coordinator
USEPA (WTR-7)
75 Hawthorne St.
San Francisco, CA 94105-3901

Executive Officer
Central Coast Regional Water Quality Control Board
895 Aerovista Place, Suite 101
San Luis Obispo, CA 93401-7906

XIV. OUTFALL AND DIFFUSER INSPECTION

Annually (October), the Discharger shall conduct an inspection of the sewage outfall pipe/diffuser system to ensure the proper operation and structural integrity of the system (e.g., cracks, breaks, leaks, plugged ports, or other actual or potential malfunctions). The outfall inspection will also check for possible external blockage of ports by sand and/or silt deposition. This inspection shall include general observations and photographic records of the outfall pipe/diffuser system and the surrounding ocean bottom in the vicinity of the outfall/diffuser. The inspection shall be conducted along the outfall pipe/diffuser system from ocean terminus to landfall. A report detailing inspection results shall be submitted to the Regional Water Board and USEPA with the annual report (see "Standard Provisions and Reporting Requirements for National Pollutant Discharge Elimination System Permits," dated January 1985). The inspection shall be conducted during a time of good underwater visibility.

XV. PRETREATMENT REQUIREMENTS

A. The Discharger shall submit an annual report to the State Water Board and USEPA describing its pretreatment activities over the previous year. In the event that the

Discharger is not in compliance with any conditions or requirements of this permit affected by the pretreatment program, including any noncompliance with pretreatment audit or compliance inspection requirements, then the Discharger shall also include the reasons for noncompliance and state how and when the Discharger shall comply with such conditions and requirements. This annual report shall cover operations from January 1st through December 31st and is due on March 1st of each year. The report shall contain, but not be limited to, the following information:

1. A summary of analytical results from representative, flow-proportioned, 24-hour composite sampling of the Discharger's influent and effluent for those pollutants USEPA has identified in Section 307(a) of the CWA. This will consist of an annual full priority pollutant scan. The Discharger is not required to sample and analyze for asbestos.

A summary of analytical results from representative samples of the treatment facility's biosolids shall also be provided. The biosolids analyzed shall be a composite sample of a minimum of twelve discrete sub-samples (grab samples) taken at equal time intervals over a typical dewatering operational period up to 24 hours, and from the last representative point in the solids handling process before disposal (e.g., from drying beds, dewatered biosolids conveyor belt, etc). Biosolids shall be sampled during the same 24-hour period and analyzed for the same pollutants as the influent and effluent sampling and analysis. Wastewater and biosolids sampling and analysis shall be performed a minimum of annually and not less than the frequency otherwise specified in this monitoring program. The Discharger shall also provide any influent, effluent, or biosolids monitoring data for non-priority pollutants which the Discharger believes may be causing or contributing to interference, pass-through, or adversely impacting biosolids quality. Sampling and analysis shall be performed in accordance with the techniques prescribed in 40 CFR Part 136 and amendments thereto. Biosolids results shall be expressed in mg/kg dry biosolids.

2. A discussion of Upset, Interference, or Pass-Through incidents, if any, at the treatment plant which the Discharger knows or suspects was caused by industrial users of the POTW system. The discussion shall include the reasons why the incidents occurred, the corrective actions taken and, if known, the name and address of the nondomestic user(s) responsible. The discussion shall also include a review of the applicable pollutant limitations to determine whether any additional limitations, or changes to existing requirements, may be necessary to prevent Pass-Through, Interference, or noncompliance with biosolids disposal/reuse requirements.

3. An updated list of the Discharger's significant industrial users (SIUs) including their names and addresses, and a list of deletions, additions, and SIU name changes keyed to the previously submitted list. The Discharger shall provide a brief explanation for each deletion. The SIU list shall identify the SIUs subject to Federal Categorical Standards by specifying which set(s) of standards are applicable to each SIU. The list shall also indicate which SIUs are subject to local limitations.

4. The Discharger shall characterize the compliance status for each SIU by providing a list or table which includes:

a. SIU name;
b. Industrial category, if subject to feneral categorical standards;
c. The type (processes) of wastewater treatment in place;
d. Number of samples taken by the Discharger during the year;
e. Number of samples taken by the SIU during the year;
f. Whether, for facilities which have limits for total toxic organics, all required certifications (if allowed) were provided;
g. Standards violated during the year (categorical standards and local limits, reported separately);
h. Whether the facility was in Significant Noncompliance (SNC), as defined by 40 CFR 403.12(f)(2)(vii), at any time during the year [SNC is determined at the beginning of each quarter based on data of the previous six (6) months]; and
i. A summary of enforcement actions taken during the year, including the type of action, final compliance date, and amount of fines assessed/collected (if any). Proposed actions for bringing the SIU into compliance, if known, should be included.

5. A brief description of any programs the POTW implements to reduce pollutants from nondomestic users that are not classified as SIUs.

6. A short description of any significant changes in operating the pretreatment program which differ from the previous year including, but not limited to, changes concerning: the program's administrative structure; local limits; monitoring program or monitoring frequencies; legal authority or enforcement policy; funding mechanisms, funding levels; or staffing levels.

6. A summary of the annual pretreatment budget, including the cost of pretreatment program functions and equipment purchases.

7. A summary of public participation activities to involve and inform the public, including a copy of the newspaper notice, if any, required under 40 CFR 403.8.

8. A description of any changes in biosolids disposal/reuse methods and a discussion of any concerns not described elsewhere in the report.

B. Semiannual reports. The Discharger shall submit a semiannual SIU noncompliance status report to EPA Pacific Southwest Region, and the State. The report shall cover the period of January 1 through June 30, and shall be submitted by July 31. The report shall contain:

1. The name and address of all SIUs which violated any discharge or reporting requirements during the report period;

2. A description of the violations including whether any discharge violations were for categorical standards or local limits;

3. A description of the enforcement or other actions that were taken to remedy the noncompliance; and

4. The status of active enforcement and other actions taken in response to SIU noncompliance identified in previous reports.

Reports shall be signed by a principal executive officer, ranking elected official, or other duly authorized employee if such employee is responsible for overall operation of the POTW. Signed copies of these reports shall be submitted to the USEPA and the State at the following addresses:

California Regional Water Quality Control Board
Central Coast Region
895 Aerovista Place, Suite 101
San Luis Obispo, CA 93401-7906

State Water Resources Control Board
Regulation Unit
P.O. Box 100
Sacramento, CA 95812-0100

U.S. EPA, Region 9
Pretreatment Program
Clean Water Act Compliance Office (WTR-7)
75 Hawthorne St
San Francisco, CA 94105-3901

XVI. REPORTING REQUIREMENTS

A. General Monitoring and Reporting Requirements

1. The Discharger shall comply with all Standard Provisions (Attachment D) related to monitoring, reporting, and recordkeeping.

B. Self Monitoring Reports (SMRs)

1. The Discharger is not currently submitting Self-Monitoring Reports (SMRs) using the State Water Board's California Integrated Water Quality System (CIWQS) Program Web site (http://www.waterboards.ca.gov/ciwqs/index.html). At any time during the term of this permit, the State Water Board or Regional Water Board will provide directions for SMR submittal when the CIWQS database is available to receive the discharger's monitoring data.

2. If results of monitoring a constituent appear to violate effluent limitations based on a weekly, monthly, 30-day, or six-month period, but compliance or non-compliance cannot be validated because sampling is too infrequent, the frequency of sampling shall be increased to validate the test within the next monitoring period. The increased frequency shall be maintained until the Executive Officer agrees the original monitoring frequency may be resumed, as stated in C.1 of the Standard Provisions and Reporting Requirements.

3. Monitoring periods and reporting for all required monitoring shall be completed according to the following schedule:

Table E-14. Monitoring Periods and Reporting Schedules

Sampling Frequency	Monitoring Period Begins On…	Monitoring Period	SMR Due Date
Continuous	Permit effective date	All	First day of second calendar month following month of sampling
X / day	Permit effective date	(Midnight through 11:59 PM) or any 24-hour period that reasonably represents a calendar day for purposes of sampling.	First day of second calendar month following month of sampling
X / week	Sunday following permit effective date or on permit effective date if on a Sunday	Sunday through Saturday	First day of second calendar month following month of sampling

X / month	First day of calendar month following permit effective date or on permit effective date if that date is first day of the month	1st day of calendar month through last day of calendar month	First day of second calendar month following month of sampling
X / quarter	Closest of January 1, April 1, July 1, or October 1 following (or on) permit effective date	January 1 through March 31 April 1 through June 30 July 1 through September 30 October 1 through December 31	May 1 August 1 November 1 February 1
X / semiannual period	Closest of January 1 or July 1 following (or on) permit effective date	January 1 through June 30 July 1 through December 31	August 1 February 1
X / year	January 1 following (or on) permit effective date	January 1 through December 31	April 1

4. Reporting Protocols. The Discharger shall report with each sample result the applicable reported Minimum Level (ML) and the current Method Detection Limit (MDL), as determined by the procedure in 40 CFR Part 136.

   The Discharger shall report the results of analytical determinations for the presence of chemical constituents in a sample using the following reporting protocols:

   a. Sample results greater than or equal to the reported ML shall be reported as measured by the laboratory (i.e., the measured chemical concentration in the sample).

   b. Sample results less than the reported ML, but greater than or equal to the laboratory's MDL, shall be reported as "Detected, but Not Quantified," or DNQ. The estimated chemical concentration of the sample shall also be reported.

      For the purposes of data collection, the laboratory shall write the estimated chemical concentration next to DNQ as well as the words "Estimated Concentration" (may be shortened to "Est. Conc."). The laboratory may, if such information is available, include numerical estimates of the data quality for the reported result. Numerical estimates of data quality may be percent accuracy (± a percentage of the reported value), numerical ranges (low to high), or any other means considered appropriate by the laboratory.

   c. Sample results less than the laboratory's MDL shall be reported as "Not Detected," or ND.

d. Discharger is to instruct laboratories to establish calibration standards so that the ML value (or its equivalent if there is differential treatment of samples relative to calibration standards) is the lowest calibration standard. At no time is the Discharger to use analytical data derived from *extrapolation* beyond the lowest point of the calibration curve.

6. The Discharger shall submit SMRs in accordance with the following requirements:

   a. The Discharger shall arrange all reported data in a tabular format. The data shall be summarized to clearly illustrate whether the facility is operating in compliance with interim and/or final effluent limitations. The Discharger, if submitting electronically to CIWQS, is not required to duplicate the submittal of data that is developed in tabular format. When electronic submittal of data is required and CIWQS does not provide for entry into a tabular format within the system, the Discharger shall electronically submit the data in a tabular format as an attachment.

   b. The Discharger shall attach a cover letter to the SMR. The information contained in the cover letter shall clearly identify violations of the WDRs; discuss corrective actions taken or planned; and the proposed time schedule for corrective actions. Identified violations must include a description of the requirement that was violated and a description of the violation.

   c. According to Section XVI.B.1 of the Monitoring and reporting Program, when available, SMRs must be submitted to the CIWQS Program Web Site and certified as required by the Standard Provisions (Attachment D), to the web address listed below:

      http://www.waterboards.ca.gov/ciwqs/index.html

   d. An Annual Self Monitoring Report Summary shall be due on April1 following each calendar year and shall include:

      I. All data required by this MRP for the corresponding monitoring period, including appropriate calculations to verify compliance with effluent limitations.

      II. A discussion of any incident of non-compliance and corrective actions taken.

C. Discharge Monitoring Reports (DMRs)

1. As described in Section XVI.B.1 above, at any time during the term of this permit, the State Water Board or Regional Water Board may notify the Discharger to electronically submit self-monitoring reports. Until such notification is given, the Discharger shall submit discharge-monitoring reports (DMRs) in accordance with the requirements described below.

2. DMRs must be signed and certified as required by the standard provisions (Attachment D). The Discharge shall submit the original DMR and one copy of the DMR to the address listed below and one copy of the DMR to the USEPA listed below:

STANDARD MAIL	FEDEX/UPS/ OTHER PRIVATE CARRIERS
State Water Resources Control Board Division of Water Quality c/o DMR Processing Center PO Box 100 Sacramento, CA 95812-1000	State Water Resources Control Board Division of Water Quality c/o DMR Processing Center 1001 I Street, 15th Floor Sacramento, CA 95814

U.S. EPA, Region 9
ATTN: WTR-7, NPDES/DMR
75 Hawthorne Street
San Francisco, CA 94105

3. All discharge monitoring results must be reported on the official USEPA pre-printed DMR forms (EPA Form 3320-1). Forms that are self-generated or modified cannot be accepted.

D. Other Reports and Notifications

Sanitary sewer overflows associated with the Discharger's collection system are subject to the online reporting and notifications requirements set forth in the Statewide General Waste Discharge Requirements for Sanitary Sewer Systems Order No. 2006-0003-DWQ. The Discharger has enrolled under the statewide waste discharge requirements for sanitary sewer systems as stated in Finding II.X. of this Order/Permit. Therefore, all prohibitions, provisions, and monitoring and reporting requirements apply to the Discharger. For any discharges of sewage to a drainage channel or surface water, the Discharger is required to notify the State Office of Emergency Services, the local; health officer of directors of environmental health with jurisdiction over affected water bodies, and the Regional Water Board, within two (2) hours after becoming aware of the discharge. Additionally, within 24-hours the Discharger shall submit to the Regional Water Board certification that the appropriate agencies (i.e., Office of Emergency Services and environmental health) have been notified of the sewage discharge to surface water bodies.

Additionally, any sanitary sewer overflows or wastewater (either partially treated or untreated) that are released at the wastewater treatment plant are subject to the same notifications requirements as mentioned above for collections systems.

HDR Engineering, Inc.

Goleta Sanitary District

Goleta, CA

Goleta Sanitary District Wastewater Treatment Plant Upgrading - Specifications – Final Design

Construction Documents Project Manual

VOLUME 1
Divisions 1 through 12

September 2010

HDR Project No. 87249

Table of Contents

VOLUME 1

DIVISION 00 - BIDDING REQUIREMENTS, CONTRACT FORMS, AND CONDITIONS OF THE CONTRACT

00020	INVITATION TO BID
00100	INSTRUCTIONS TO BIDDERS
00301	BID FORM
00500	AGREEMENT
00700	STANDARD GENERAL CONDITIONS
00805	SUPPLEMENTARY CONDITIONS

DIVISION 01 - GENERAL REQUIREMENTS

01050	PLANT SHUTDOWNS
01060	SPECIAL CONDITIONS
01070	STANDARD ABBREVIATIONS AND SYMBOLS
01320	CONSTRUCTION PROGRESS SCHEDULE
01340	SUBMITTALS
01560	ENVIRONMENTAL PROTECTION AND SPECIAL CONTROLS
01600	PRODUCT DELIVERY, STORAGE, AND HANDLING
01601	JOB CONDITIONS
01640	PRODUCT SUBSTITUTIONS
01650	FACILITY START-UP
01710	CLEANING
01720	RECORD DOCUMENTS
01800	OPENINGS AND PENETRATIONS IN CONSTRUCTION
01900	SEISMIC REQUIREMENTS

DIVISION 02 - SITE WORK

02072	DEMOLITION, CUTTING AND PATCHING
02110	SITE CLEARING
02200	EARTHWORK
02221	TRENCHING, BACKFILLING, AND COMPACTING FOR UTILITIES
02260	TOPSOILING AND FINISHED GRADING
02423	STORM DRAINAGE SYSTEM
02513	ASPHALTIC CONCRETE VEHICULAR PAVING
02515	PRECAST CONCRETE MANHOLE STRUCTURES
02528	CONCRETE CURB AND GUTTER
02529	CONCRETE SIDEWALK AND STEPS

DIVISION 03 - CONCRETE

03002	CONCRETE
03108	FORMWORK
03123	CONTROLLED DENSITY FILL
03208	REINFORCEMENT
03308	CONCRETE, MATERIALS AND PROPORTIONING
03311	CONCRETE MIXING, PLACING, JOINTING, AND CURING

03348 CONCRETE FINISHING AND REPAIR OF SURFACE DEFECTS
03350 TESTING
03936 WATER LEAKAGE TEST FOR CONCRETE STRUCTURES

DIVISION 04 - MASONRY

04050 COLD AND HOT WEATHER MASONRY CONSTRUCTION
04110 CEMENT AND LIME MORTARS
04155 MASONRY ACCESSORIES
04220 CONCRETE MASONRY
04510 MASONRY CLEANING

DIVISION 05 - METALS

05120 STRUCTURAL STEEL
05131 STRUCTURAL ALUMINUM
05313 METAL DECK
05505 METAL FABRICATIONS
05522 ALUMINUM RAILINGS

DIVISION 06 - WOOD AND PLASTICS

06100 ROUGH CARPENTRY
06410 ARCHITECTURAL CABINETWORK (MILLWORK)
06620 FIBERGLASS REINFORCED PLASTIC (FRP): WEIRS AND TROUGHS

DIVISION 07 - THERMAL AND MOISTURE PROTECTION

07162 DAMPPROOFING
07176 LIQUID WATER REPELLENT
07190 UNDER SLAB VAPOR RETARDER
07210 BUILDING INSULATION
07245 EXTERIOR INSULATION AND FINISH SYSTEM (EIFS)
07422 ALUMINUM COMPOSITE MATERIAL (ACM) SYSTEM
07534 ADHERED ELASTOMERIC (EPDM) SHEET ROOFING
07600 FLASHING AND SHEET METAL
07720 ROOF HATCH(ES) (SCUTTLE)
07840 FIRESTOPPING
07900 JOINT SEALANTS

DIVISION 08 - DOORS AND WINDOWS

08110 METAL DOORS AND FRAMES AND BORROWED LIGHT FRAMES
08120 ALUMINUM DOORS AND FRAMES
08210 FLUSH WOOD DOORS
08334 ALUMINUM ROLLING OVERHEAD DOORS
08410 STOREFRONT
08700 FINISH HARDWARE
08800 GLASS AND GLAZING

DIVISION 09 - FINISHES

09110 NON-LOAD-BEARING WALL FRAMING SYSTEMS
09130 ACOUSTIC SUSPENSION SYSTEM

09250 GYPSUM BOARD
09310 CERAMIC TILE (CT)
09512 ACOUSTICAL MATERIALS
09660 VINYL COMPOSITION TILE FLOORING AND RESILIENT BASE
09690 CARPET TILE (CPTT)
09905 PAINTING AND PROTECTIVE COATINGS

DIVISION 10 - SPECIALTIES

10100 LIQUID CHALKBOARD AND TACKBOARDS
10162 METAL TOILET PARTITIONS
10200 LOUVERS AND VENTS
10400 IDENTIFICATION DEVICES
10444 SIGNAGE
10500 METAL LOCKERS AND LOCKER BENCHES
10520 FIRE EXTINGUISHER AND CABINETS
10650 ACCORDION PARTITIONS
10800 TOILET AND BATH ACCESSORIES
10950 MISCELLANEOUS SPECIALTIES

DIVISION 11 - EQUIPMENT

11005 EQUIPMENT: BASIC REQUIREMENTS
11060 PUMPING EQUIPMENT: BASIC REQUIREMENTS
11061 PUMPING EQUIPMENT: SUBMERSIBLE NON-CLOG CENTRIFUGAL
11062 PUMPING EQUIPMENT: SUBMERSIBLE NON-CLOG CENTRIFUGAL WITHIN STEEL COLUMN
11069 PUMPING EQUIPMENT: PROGRESSING CAVITY
11072 PUMPING EQUIPMENT: PROPELLER-BIOFILTER RECIRCULATION PUMP
11073 PUMPING EQUIPMENT: PROPELLER
11080 AERATION EQUIPMENT: BASIC REQUIREMENTS
11082 VERTICAL CHOPPER PUMPS
11085 HIGH SPEED TURBO AERATION BLOWER
11088 AERATION EQUIPMENT: FINE BUBBLE TYPE
11120 ELECTRIC 4" FLOATING SLUDGE HANDLING SYSTEM WITH RADIO REMOTE FLUMP
11125 SLUDGE COLLECTION: CIRCULAR SUCTION-TYPE
11146 SLUDGE THICKENER
11147 SLUDGE DEWATERING EQUIPMENT (SCREW PRESS)
11210 SELF-CLEANING SCREENS: STEP TYPE
11213 ROTARY LOBE PUMPS
11220 SCREENINGS WASHER/COMPACTOR
11230 GRIT WASHING AND DEWATERING EQUIPMENT
11366 TRICKLING FILTER: ROTARY DISTRIBUTOR
11923 LIQUID POLYMER SYSTEM

DIVISION 12 - FURNISHINGS

12500 WINDOW TREATMENT
12691 ENTRANCE FLOORING SYSTEMS

VOLUME 2

DIVISION 13 - SPECIAL CONSTRUCTION

13224 CLARIFIER BASINS REHABILITATION
13226 TRICKLING FILTER MEDIA
13228 WASTE GAS BURNER
13322 INSTRUMENTATION AND CONTROL SYSTEM TESTING
13323 INSTRUMENTATION AND CONTROL SYSTEM COMMISSIONING
13440 INSTRUMENTATION FOR PROCESS CONTROL: BASIC REQUIREMENTS
13441 CONTROL LOOP DESCRIPTIONS
13442 PRIMARY ELEMENTS AND TRANSMITTERS
13446 CONTROL AUXILIARIES
13448 CONTROL PANELS AND ENCLOSURES
13449 SURGE PROTECTION DEVICES (SPD) FOR INSTRUMENTATION AND CONTROL EQUIPMENT
13500 PROGRAMMABLE LOGIC CONTROLLER (PLC) CONTROL SYSTEM
13504 CONFIGURATION REQUIREMENTS: HUMAN MACHINE INTERFACE (HMI) AND REPORTS
13510 GENERAL REQUIREMENTS: CONTROL SYSTEMS INTEGRATOR

DIVISION 14 - CONVEYING SYSTEMS

14240 HYDRAULIC ELEVATORS
14550 CONVEYORS: BELT
14551 CONVEYORS: SCREW

DIVISION 15 - MECHANICAL

15060 PIPE AND PIPE FITTINGS: BASIC REQUIREMENTS
15061 PIPE: STEEL
15062 PIPE: DUCTILE
15063 PIPE: COPPER
15064 PIPE: PLASTIC
15066 STAINLESS STEEL PIPE
15090 PIPE SUPPORT SYSTEMS
15100 VALVES: BASIC REQURIEMENTS
15101 GATE VALVES
15102 PLUG VALVES
15103 BUTTERFLY VALVES
15104 BALL VALVES
15105 GLOBE VALVES
15106 CHECK VALVES
15114 MISCELLANEOUS VALVES
15115 WATER CONTROL GATES
15183 PIPE, DUCT AND EQUIPMENT INSULATION
15440 PLUMBING FIXTURES AND EQUIPMENT
15515 HYDRONIC SPECIALTIES
15555 BOILERS
15605 HVAC: EQUIPMENT
15652 REFRIGERANT PIPING SYSTEM
15886 ODOR REDUCTION SYSTEM: BIOLOGICAL
15890 HVAC: DUCTWORK

15970 INSTRUMENTATION AND CONTROL FOR HVAC SYSTEMS
15990 HVAC SYSTEMS: BALANCING AND TESTING

DIVISION 16 - ELECTRICAL

16010 ELECTRICAL: BASIC REQUIREMENTS
16060 GROUNDING
16080 ACCEPTANCE TESTING
16120 WIRE AND CABLE: 600 VOLT AND BELOW
16130 RACEWAYS AND BOXES
16132 CABLE TRAY
16135 ELECTRICAL: EXTERIOR UNDERGROUND
16140 WIRING DEVICES
16220 MOTORS
16230 ENGINE GENERATOR: DIESEL
16265 VARIABLE FREQUENCY DRIVES - LOW VOLTAGE
16275 DISTRIBUTION TRANSFORMERS
16410 SAFETY SWITCHES
16430 SWITCHGEAR
16440 SWITCHBOARDS
16441 PANELBOARDS
16442 MOTOR CONTROL EQUIPMENT
16460 DRY-TYPE TRANSFORMERS
16490 OVERCURRENT AND SHORT CIRCUIT PROTECTIVE DEVICES
16491 LOW VOLTAGE SURGE PROTECTION DEVICES (SPD)
16492 ELECTRICAL METERING DEVICES
16493 CONTROL EQUIPMENT ACCESSORIES
16500 INTERIOR AND EXTERIOR LIGHTING
16711 PASSIVE TELECOMMUNICATION SYSTEM

SECTION 00020
INVITATION TO BID

RECEIPT OF BIDS

Sealed bids for the construction of Goleta Sanitary District Wastewater Treatment Plant Upgrading will be received for Goleta Sanitary District represented by Mr. Kamil Azoury, General Manager/Chief Engineer.

Bids will be received at One William Moffet Place, Goleta, California 93117 until 2:30 pm on Autust 31, 2010. Bids received after the bid opening will be returned unopened. As soon thereafter as possible, the bids will be opened publicly and read aloud at the above mentioned address. Bids shall be addressed to Mr. Kamil Azoury, and shall be labeled "Goleta Sanitary District Wastewater Treatment Plant Upgrading."

GENERAL DESCRIPTION OF WORK

The work includes furnishing of labor, materials, and services for the construction of the following: upgrades to the existing treatment plant headworks, which include replacing the existing bar screens and grit separator and grit washer; addition of screenings washers and compactors; replacement of the headworks odor reduction tower; conversion of Solids Stabilization Basin 3 with into a primary effluent equalization basin; addition of a primary effluent equalization basin pumping station; addition of a new trickling filter and associated recirculation pumping station; addition of aeration basins and aeration system including a Blower Building; addition of secondary sedimentation tanks; modifications to the existing secondary effluent pumping station; waste activated sludge thickening; digested sludge dewatering; a Solids Handling Building; miscellaneous yard piping; electrical duct bank; electrical systems; controls and instrumentation; a Locker and Shower Building; and other miscellaneous improvements to upgrade and facilitate the existing treatment plant process and operation.

TYPE OF BID

Bid shall be on a firm lump sum basis for the total of the items listed in the Bid Form.

DOCUMENT EXAMINATION AND PROCUREMENTS

The Bidding and Contract Documents may be examined at the following locations:

Goleta Sanitary District
One William Moffett Place
Goleta, California 93117

or

HDR Engineering, Inc.
3230 El Camino Real
Irvine, CA 92603

Copies of the Bidding and Contract Documents are also on file at {(Plan (Centers)}.
Copies of the Bidding and Contract Documents may be purchased from the Issuing Office which is as follows:

HDR Engineering, Inc.
3230 El Camino Real
Irvine, CA 92603
Attn: Mr. Guillermo Garcia, Project Manager
Telephone: (714) 730-2355

The cost of Bidding and Contract Documents is:
Set of Bidding and Contract Documents with full size drawings: $250.00.
Set of Bidding and Contract Documents with half size drawings: $125.00.
Set of Bidding and Contract Documents in PDF format: $50.00.

No partial sets of Specifications or Drawings will be issued.

Refund Policy: No refund for any Bidding and Contract Documents will be made.

BID SECURITY

Each Bid shall be accompanied by bid security as described in Section 00100 - Instructions to Bidders.

CONTRACT SECURITY

The successful BIDDER will be required to furnish Performance and Payment Bonds as described in Section 00700 - General Conditions.

PREBID CONFERENCE

A prebid conference will be held as described in Section 00100 - Instructions to Bidders.

CONTRACT TIME

The Contract Time is defined in Section 00700 - General Conditions, and specified in Section 00500 - Agreement.

QUALIFICATION OF BIDDERS

Requirements concerning the qualifications of BIDDERS are described in Section 00100 - Instructions to Bidders.

OWNER'S RIGHT TO REJECT BIDS

Goleta Sanitary District reserves the right to waive irregularities and to reject bids.

FUNDING

Funding for the project will use a low interest loan from the State of California State Revolving fund program.

LABOR CODE

Pursuant to the provisions of Section 1720 et seq. of the Labor Code of California, the Director of Industrial Relations for the State of California has ascertained the current general prevailing rate of wages for employer purposes, in Santa Barbara County, State of California. If the Work includes inspection and/or testing as defined in California Labor Code section 1720, subdivision (a), paragraph 1, and/or precedential opinions of the Director of the Department of Industrial Relations, then in accordance with California Labor Code section 1771, not less than the general prevailing rate of per diem wages for work of a similar character in Santa Barbara County and not less than the general prevailing rate of per diem wages for holiday work fixed as provided in the California Labor Code must be paid to all workers engaged in such inspection and/or testing work.

In accordance with the California Labor Code Section 1773.2, copies of the applicable determinations of the Director are on file in the District Office and may be reviewed upon request.

GOLETA SANITARY DISTRICT

DATE: XXXXX

Kamil Azoury, General Manager/chief Engineer

END OF SECTION

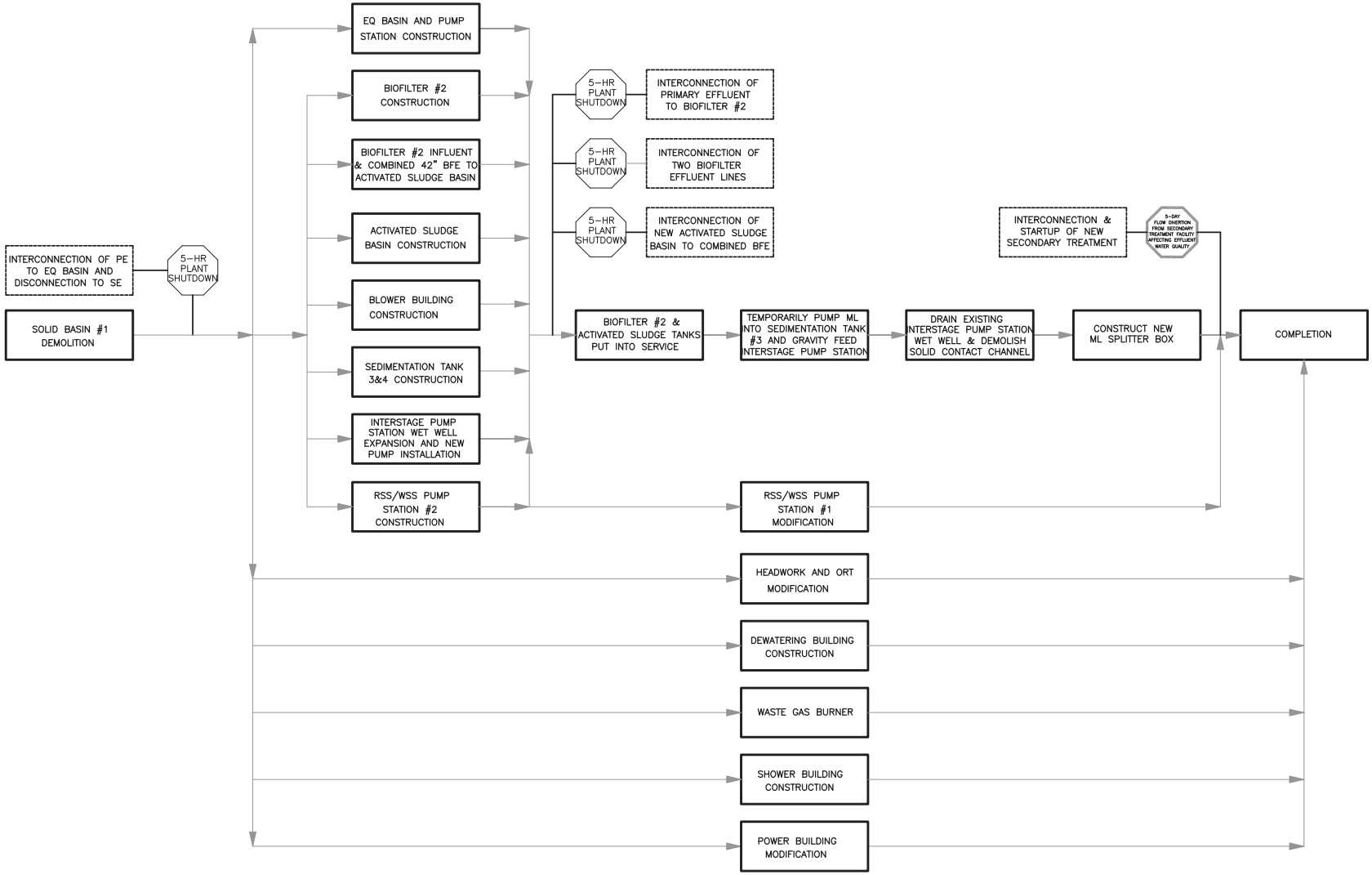

HDR

SPECIFICATION 01060
CONSTRUCTION SEQUENCE

FEBRUARY 2009

FIGURE 0

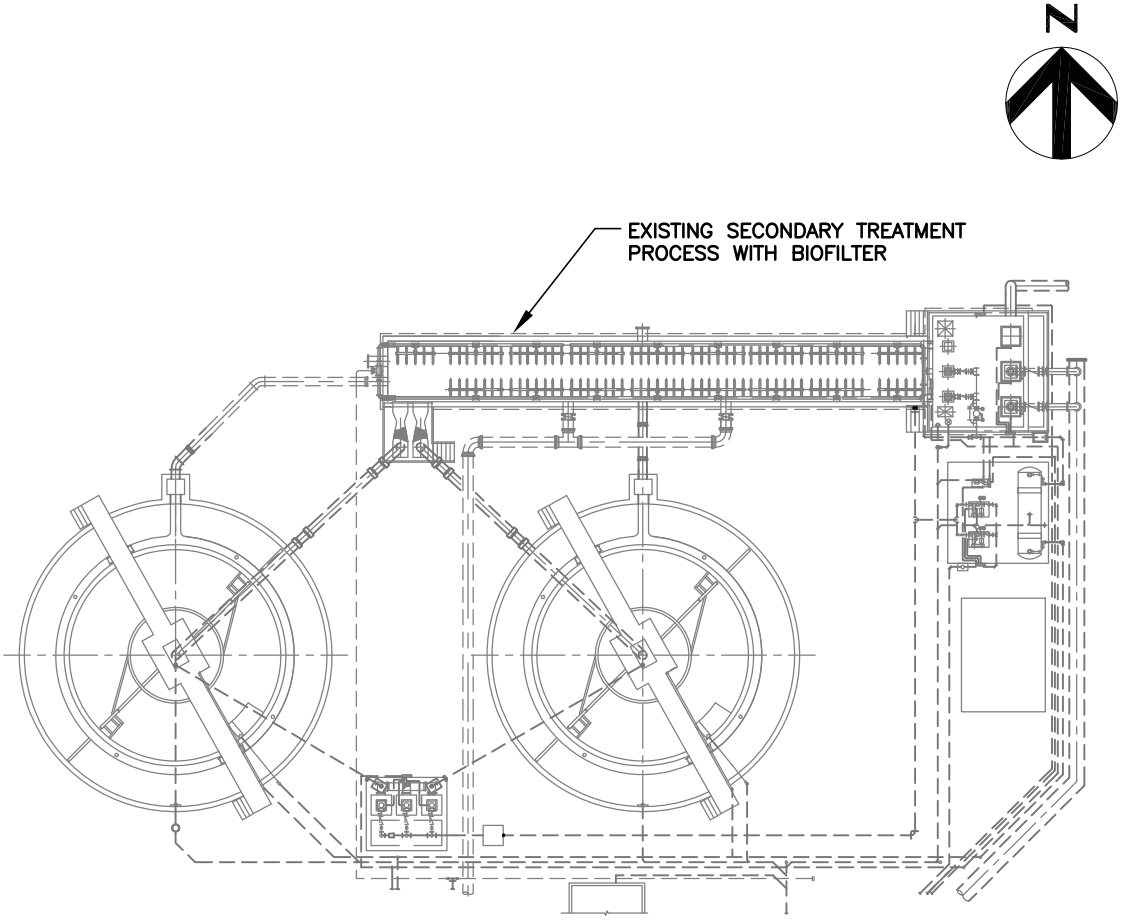

HDR

SPECIFICATION 01060
CONSTRUCTION SEQUENCE
SECONDARY TREATMENT PROCESS

FEBRUARY 2009

FIGURE
1

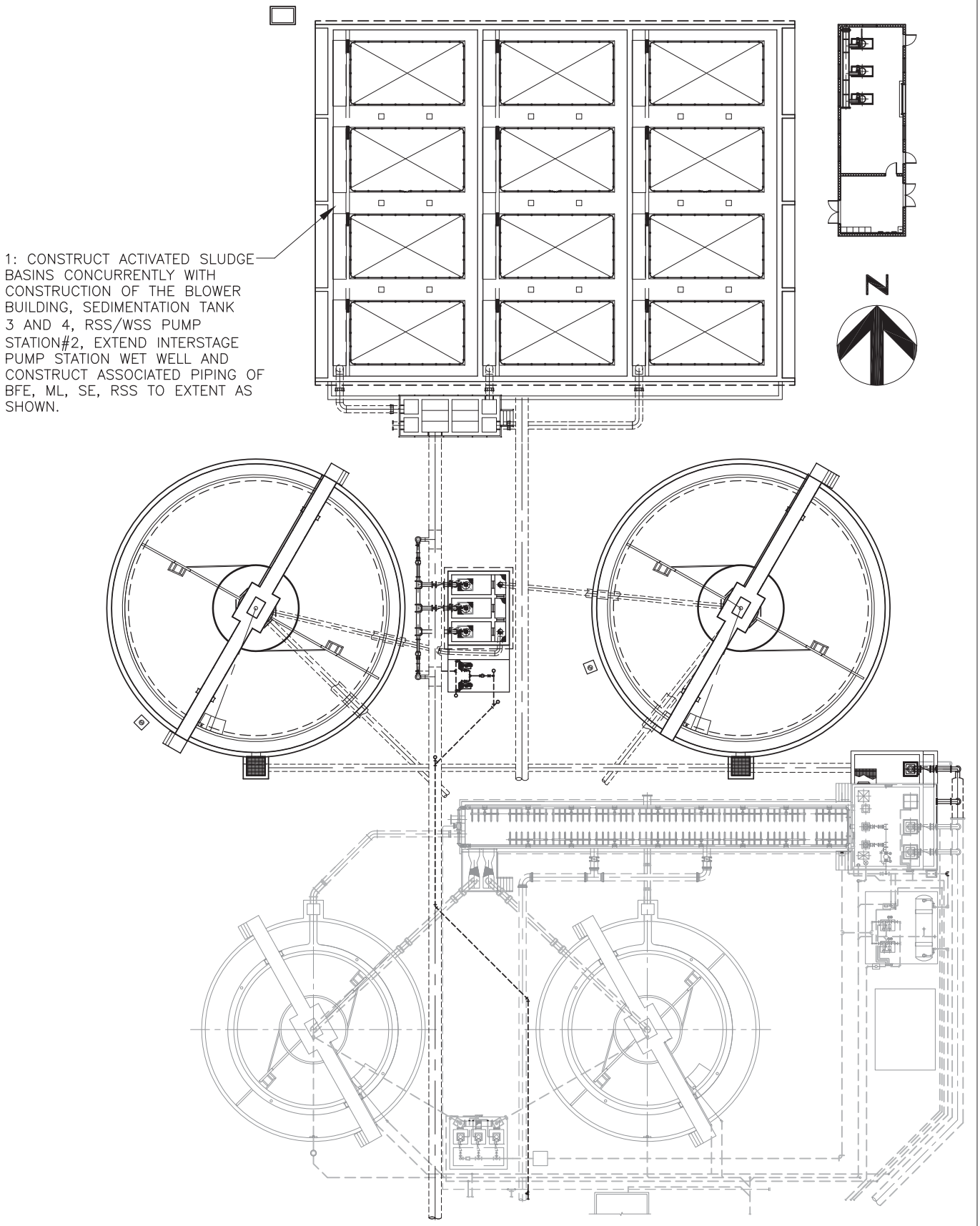

HDR

SPECIFICATION 01060
CONSTRUCTION SEQUENCE
SECONDARY TREATMENT PROCESS

FEBRUARY 2009

FIGURE 2

1: TIE BIOFILTER #1 AND #2 EFFFLUENT INTO 42" BFE SO IT WILL FLOW TO THE ACTIVATED SLUDGE BASINS.

2: PUT BIOFILTER 1&2, ACTIVATED SLUDGE BASINS IAND SEDIMENTATION TANK #4 INTO SERVICE.

3: PROVIDE TEMPORARY PUMPING FROM THE ACTIVATED SLUDGE TANK TO SEDIMENTATION TANK #4 AS SHOWN.

4: START THE NEW INTERSTAGE PUMP STATION PUMP TO KEEP THE PLANT IN OPERATION.

5: DRAIN THE EXISTING INTERSTAGE PUMP STATION WET WELL AND KNOCK OUT THE WALL FOR THE 3'X'3 SLIDE GATE. KEEP THE GATE IN CLOSE POSITION. DEMOLISH THE SOLID CONTACT CHANNEL. DEMOLISH 24" BFE AND 20" SE TO EXTENT AS SHOWN(SEE FIGURE 2 FOR REFERENCE).

6: PUT RSS/WSS PUMPING STATION #2 IN SERVICE AND MAKE MODIFICATION TO RSS/WSS PUMPING STATION #1.

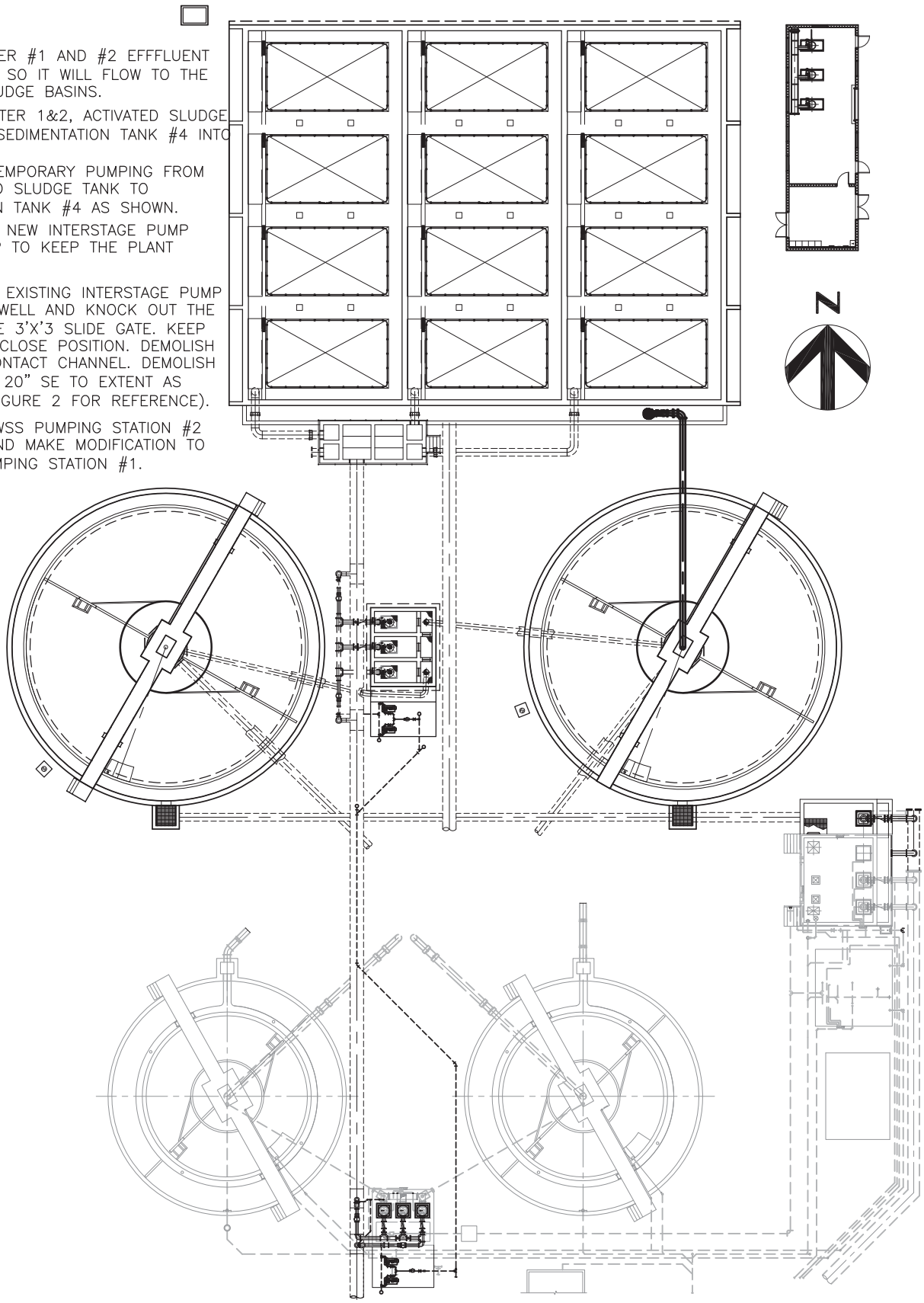

HDR

SPECIFICATION 01060
CONSTRUCTION SEQUENCE
SECONDARY TREATMENT PROCESS

FEBRUARY 2009

FIGURE
3

1: BUILD THE MIXED LIQUOR SPLITTER BOX.

2: MAKE CONNECTION FROM ACTIVATED SLUDGE BASIN EFFLUENT CHANNEL TO THE MIXED LIQUOR SPLITTER BOX.

3: MAKE CONNECTION FROM THE MIXED LIQUOR SPLITTER BOX TO SEDIMENTATION TANK 1 AND 2, 3 AND 4.

4: MAKE CONNECTION OF NEW 24" SE TO INTERSTAGE PUMP STATION.

5: ONCE ALL TIE–INS ARE COMPLETE, OPEN THE GATE AT THE EXTENDED INTERSTAGE PUMP STATION WET WELL AND PUT SEDIMENTATION TANK 1&2 AND EXISTING INTERSTAGE PUMP STATION PUMPS IN SERVICE.

6: REMOVE TEMPORARY PUMPING AND PIPELINE FROM ACTIVATED SLUDGE BASIN EFFLUENT CHANNEL AND PUT ENTIRE SYSTEM ON.

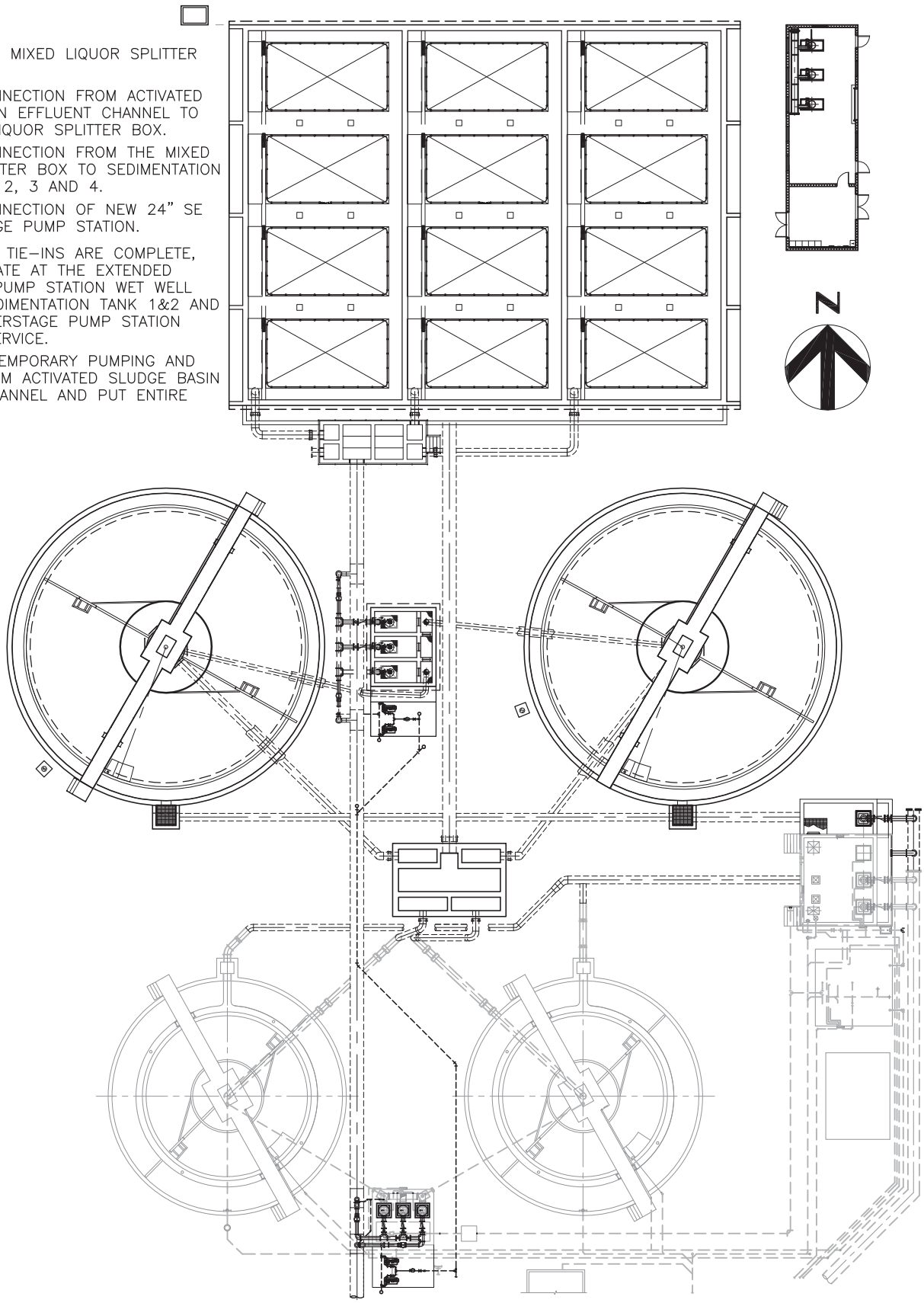

HDR

SPECIFICATION 01060
CONSTRUCTION SEQUENCE
SECONDARY TREATMENT PROCESS

FEBRUARY 2009

FIGURE
4

D I V I S I O N 2

SITE WORK

SECTION 02072
DEMOLITION, CUTTING AND PATCHING

PART 1 - GENERAL

1.1 SUMMARY

A. Section Includes:
   1. Demolition, cutting and patching of existing construction where shown on Drawings, or as required to accommodate new work shown or specified.

B. Related Sections include but are not necessarily limited to:
   1. Division 0 - Bidding Requirements, Contract Forms, and Conditions of the Contract.
   2. Division 1 - General Requirements.
   3. Section 03348 - Concrete Finishing and Repair of Surface Defects.
   4. Section 09905 - Painting and Protective Coatings.

1.2 SUBMITTALS

A. Shop Drawings:
   1. See Section 01340 for requirements for the mechanics and administration of the submittal process.
   2. Indicating manufacturer and type of:
      a. Proposed nonshrink grout.
      b. Epoxy bonding adhesive.
      c. Proposed materials and methods to be used for matching and repairing existing construction.

1.3 DELIVERY, STORAGE, AND HANDLING

A. General:
   1. Salvage items, designated for District's salvage, as a functional unit.
   2. Clean, list and tag for storage.
   3. Protect from damage and deliver to location designated.
   4. Salvage each item with auxiliary or associated equipment required for operation.

1.4 SITE CONDITIONS

A. Perform preliminary investigations as required to ascertain extent of work.

1.5 SEQUENCING AND SCHEDULING

A. Coordinate and reschedule work as required to preclude interference with other operations.

PART 2 - PRODUCTS

2.1 ACCEPTABLE MANUFACTURERS

A. Subject to compliance with the Contract Documents, the following products and manufacturers are acceptable:
   1. Nonshrink grout:
      a. Supreme Grout by Gifford Hill.
      b. Masterflow 713 Plus by BASF Building Systems.
      c. Sika Grout 212 by Sika.
      d. Or Equal.
   2. Epoxy bonding adhesive:

a. Euco No.452 MV by Euclid Chemical Co.
b. Sikadur 32, Hi-Mod by Sika Corporation.

B. Submit request for substitution in accordance with Specification Section 01640.

2.2 MATERIALS

A. Temporary Partitions:
1. Plywood: 1/2 IN minimum for interior or exterior use.
2. Paneling: 1/4 IN minimum for interior use.

B. Nonshrink Grout:
1. Nonmetallic, noncorrosive and nonstaining.
2. Premixed with only water to be added in accordance with manufacturer's instructions at jobsite.
3. Grout to produce a positive but controlled expansion. Mass expansion not to be created by gas liberation or by other means.
4. Minimum compressive strength at 28 days to be 6500 psi.
5. Coat exposed edges of grout with a cure/seal compound recommended by grout manufacturer.

C. Epoxy Bonding Adhesive:
1. Two component, moisture insensitive adhesive manufactured for the purpose of bonding fresh concrete to hardened concrete.

PART 3 - EXECUTION

3.1 PREPARATION

A. Provide temporary partitions as required in public areas.
1. Construct partitions of braced plywood in exterior areas.
2. Adequately braced paneling may be used in interior areas.

B. Provide covered passageways where necessary to ensure safe passage of persons in or near areas of work.

C. Provide substantial barricades and safety lights as required.

D. Provide temporary dustproof partitions where indicated or necessary.
1. Prevent infiltration of dust into occupied areas.

E. Provide temporary weather protection as necessary.

3.2 INSTALLATION

A. Cutting and Removal:
1. Remove existing work indicated to be removed, or as necessary for installation of new work.
2. Neatly cut and remove materials, and prepare all openings to receive new work.
3. Remove masonry or concrete in small sections.

B. Modification of Existing Concrete:
1. Where indicated, remove existing concrete and finish remaining surfaces as specified in Section 03348.
a. Protect remaining concrete from damage.
b. Make openings by sawing through the existing concrete.
c. Concrete may be broken out after initial saw cuts in the event concrete thickness prevents cutting through.
d. Where sawing is not possible, make openings by drilling holes around perimeter of opening and then chipping out the concrete.

1) Holes shall be sufficient in number to prevent damage to remaining concrete.

2. Oversize required openings in existing concrete 1 IN on all sides and build back to required opening size by means of nonshrink grout epoxy bonded to the existing concrete.
3. Where oversized openings cannot be made, remove the concrete to the required opening size and cut back exposed reinforcing 1 IN from face of concrete and fill resulting holes with nonshrink grout.

C. Removal of Existing Anchor Bolts or Other Protruding Elements:
1. Removal within a distance of 6 FT above finished floor or operating level elevation.
2. Removed to a depth of 1/2 IN from finished surface.
3. Fill void with non-shrink grout.

D. Matching and Patching:
1. Walls, ceilings, floors or partitions:
   a. Repair abutting walls, ceilings, floors or partitions disturbed by removal.
   b. Match and patch existing construction disturbed during installation of new work.
2. Methods and materials:
   a. Similar in appearance, and equal in quality to adjacent areas for areas or surfaces being repaired.
   b. Subject to review of Engineer.

E. Salvaged Items:
1. Thoroughly dry and clean all metal surfaces.
2. Prime all bare metal in accordance with Section 09905.
3. Clean and lubricate motors and other moving parts.
4. Brace motors attached to flexible mountings until reinstallation.
5. The District has first rights to all equipment and materials that are removed, salvaged, or demolished as part of this contract.
   a. The Contractor shall notify the Construction Manager 15 days prior to commencement of any demolition in an area.
   b. The District will identify an equipment or materials that will be salvaged.
   c. The District will identify the salvage item storage location for the Contractor.
   d. The Contractor shall dispose of items or materials not designated for District's salvage or reuse. Promptly remove from site.
6. Do not store or sell Contractor salvaged items or materials on site.

F. Clean Up:
1. Transport debris and legally dispose of off site.

END OF SECTION

SECTION 02110
SITE CLEARING

PART 1 - GENERAL

1.1 SUMMARY

A. Section Includes:
   1. Site clearing, tree protection, stripping topsoil and demolition.

B. Related Sections include but are not necessarily limited to:
   1. Division 0 - Bidding Requirements, Contract Forms, and Conditions of the Contract.
   2. Division 1 - General Requirements.
   3. Section 02200 - Earthwork.
   4. Section 02260 - Topsoiling and Finished Grading.
   5. Section 02270 - Soil Erosion and Sediment Control.

PART 2 - PRODUCTS - (NOT APPLICABLE TO THIS SECTION)

PART 3 - EXECUTION

3.1 PREPARATION

A. Protect existing trees and other vegetation to remain against damage.
   1. Do not smother trees by stockpiling construction materials or excavated materials within drip line.
   2. Avoid foot or vehicular traffic or parking of vehicles within drip line.
   3. Provide temporary protection as required.

B. Repair or replace trees and vegetation damaged by construction operations.
   1. Repair to be performed by a qualified tree surgeon.
   2. Remove trees which cannot be repaired and restore to full-growth status.
   3. Replace with new trees of minimum 4 IN caliper.

C. District will obtain authority for removal and alteration work on adjoining property.

3.2 SITE CLEARING

A. Topsoil Removal:
   1. Strip topsoil to depths encountered.
      a. Remove heavy growths of grass before stripping.
      b. Stop topsoil stripping sufficient distance from such trees to prevent damage to main root system.
      c. Separate from underlying subsoil or objectionable material.
   2. Stockpile topsoil where directed by Engineer.
      a. Construct storage piles to freely drain surface water.
      b. Seed or cover storage piles to prevent erosion.
   3. Do not strip topsoil in wooded areas where no change in grade occurs.
   4. Borrow topsoil: Reasonably free of subsoil, objects over 2 IN DIA, weeds and roots.

B. Clearing and Grubbing:
   1. Clear from within limits of construction all trees not marked to remain.
      a. Include shrubs, brush, downed timber, rotten wood, heavy growth of grass and weeds, vines, rubbish, structures and debris.

2. Grub (remove) from within limits of construction all stumps, roots, root mats, logs and debris encountered.
    a. Totally grub under areas to be paved.
    b. Grubbing in lawn areas:
        1) In cut areas, totally grub.
        2) In fill areas, where fill is less than 3 FT totally grub ground.
        3) Where fill is 3 FT or more in depth, stumps may be left no higher than 6 IN above existing ground surface.

C. Disposal of Waste Materials:
    1. Do not burn combustible materials on site.
    2. Remove all waste materials from site.
    3. Do not bury organic matter on site.

3.3 ACCEPTANCE

A. Upon completion of the site clearing, obtain Engineer's acceptance of the extent of clearing, depth of stripping and rough grade.

END OF SECTION

SECTION 02200
EARTHWORK

PART 1 - GENERAL

1.1 SUMMARY

A. Section Includes:
   1. Earthwork.

B. Related Sections include but are not necessarily limited to:
   1. Division 0 - Bidding Requirements, Contract Forms, and Conditions of the Contract.
   2. Division 1 - General Requirements.
   3. Section 07190 - Under Slab Vapor Retarder.
   4. Geotechnical Report: Job# 23315-05 by Tetra Tech Inc. (Ph: 805-681-3100

1.2 QUALITY ASSURANCE

A. Referenced Standards:
   1. ASTM International (ASTM):
      a. C33, Standard Specification for Concrete Aggregates.
      b. C136, Method of testing for sieve or screen analysis of fine and coarse aggregate
      c. D420, Standard recommendation practice for investigating & sampling soil & rock for engineering purposes.
      d. D698, Standard Test Method for Laboratory Compaction Characteristics of Soil Using Standard Effort (12,400 ft-lbf/ft^3).
      e. D1557, Standard Test Method for Laboratory Compaction Characteristics of Soil Using Modified Effort (56,000 ft-lbf/ft^3(2,700 kN-m/m)).
      f. D3786, Standard Test Method for Hydraulic Bursting Strength of Knitted Goods and Nonwoven Fabrics: Diaphragm.
      g. D4253, Standard Test Methods for Maximum Index Density of Soils Using a Vibratory Table.
      h. D4254, Standard Test Methods for Minimum Index Density of Soils and Calculation of Relative Density.
      i. D4632, Standard Test Method for Grab Breaking Load and Elongation of Geotextiles.

1.3 SUBMITTALS

A. Shop Drawings:
   1. See Section 01340 for requirements for the mechanics and administration of the submittal process.
   2. Product technical data including:
      a. Acknowledgement that products submitted meet requirements of standards referenced.
      b. Manufacturer's installation instructions.
   3. Certifications.
   4. Test reports:
      a. Soils inspection and testing results.
      b. Grain size Analysis for all imported fill material
      c. Test reports

B. Samples:
   1. Submit samples and source of fill and backfill materials proposed for use.
   2. Submit samples and source of borrow materials proposed for use.

PART 2 - PRODUCTS

2.1 MATERIALS

A. Fill and Backfill: Selected material approved by Soils Engineer from site excavation or from off site borrow.

B. Granular Fill Under Building Floor Slabs-On-Grade: Clean, crushed, nonporous rock, crushed or uncrushed gravel complying with ASTM C33 gradation size No. 67, 3/4 IN to No. 4.

C. Granular Fill Under Base Slabs with Pressure Relief Valves:
   1. Drainage material: Conform to ASTM C33, Size No. 67.
   2. Filter material: Conform to ASTM C33 requirements for fine aggregate.

D. Geotextile Filter Fabric:
   1. Woven type.
   2. Equivalent opening size: 50-100 (U.S. Standard Sieve).
   3. Permeability coefficient (cm/second): 0.07 minimum, 0.30 maximum.
   4. Grab strength: 90 LBS minimum in either direction in accordance with ASTM D4632 requirements.
   5. Mullen burst strength: 125 psi minimum in accordance with ASTM D3786 requirements.

E. Vapor Barrier: Refer to Section 07190.

PART 3 - EXECUTION

3.1 PROTECTION

A. Protect existing surface and subsurface features on-site and adjacent to site as follows:
   1. Provide barricades, coverings, or other types of protection necessary to prevent damage to existing items indicated to remain in place.
   2. Protect and maintain bench marks, monuments or other established reference points and property corners.
      a. If disturbed or destroyed, replace at own expense to full satisfaction of District and controlling agency.
   3. Verify location of utilities.
      a. Omission or inclusion of utility items does not constitute non-existence or definite location.
      b. Secure and examine local utility records for location data.
      c. Take necessary precautions to protect existing utilities from damage due to any construction activity.
      d. Repair damages to utility items at own expense.
      e. In case of damage, notify Engineer at once so required protective measures may be taken.
   4. Maintain free of damage, existing sidewalks, structures, and pavement, not indicated to be removed.
      a. Any item known or unknown or not properly located that is inadvertently damaged shall be repaired to original condition.
      b. All repairs to be made and paid for by Contractor.
   5. Provide full access to public and private premises, fire hydrants, street crossings, sidewalks and other points as designated by District to prevent serious interruption of travel.
   6. Maintain stockpiles and excavations in such a manner to prevent inconvenience or damage to structures on-site or on adjoining property.
   7. Avoid surcharge or excavation procedures which can result in heaving, caving, or slides.

B. Salvageable Items: Carefully remove items to be salvaged, and store on District's premises unless otherwise directed.

C. Dispose of waste materials, legally, off site.
   1. Burning, as a means of waste disposal, is not permitted.

3.2 SITE EXCAVATION AND GRADING

A. The work includes all operations in connection with excavation, borrow, construction of fills and embankments, rough grading, and disposal of excess materials in connection with the preparation of the site(s) for construction of the proposed facilities. Contractor shall comply with all requirements for Site Preparation, Grading and Excavation indicated in the Geotechnical Report. Contractor shall also comply with current requirements of Cultural Resource Management Services (CRMS) as indicated in reports published by DUDEK (address: 621 Chapala Street, Santa Barbara, CA 93101; phone number: 805-963-0651).

B. Excavation and Grading: Perform as required by the Contract Drawings.
   1. Contract Drawings may indicate both existing grade and finished grade required for construction of Project.
      a. Stake all units, structures, piping, roads, parking areas and walks and establish their elevations.
      b. Perform other layout work required.
      c. Replace property corner markers to original location if disturbed or destroyed.
   2. Preparation of ground surface for embankments or fills:
      a. Before fill is started, scarify to a minimum depth of 6 IN in all proposed embankment and fill areas.
      b. Where ground surface is steeper than one vertical to four horizontal, plow surface in a manner to bench and break up surface so that fill material will bind with existing surface.
   3. Protection of finish grade:
      a. During construction, shape and drain embankment and excavations.
      b. Maintain ditches and drains to provide drainage at all times.
      c. Protect graded areas against action of elements prior to acceptance of work.
      d. Reestablish grade where settlement or erosion occurs.

C. Borrow:
   1. Provide necessary amount of approved fill compacted to density equal to that indicated in this Specification.
   2. Include cost of all borrow material in original proposal.
   3. Fill material to be approved by Soils Engineer prior to placement.

D. Construct embankments and fills as required by the Contract Drawings:
   1. Construct embankments and fills at locations and to lines of grade indicated.
      a. Completed fill shall correspond to shape of typical cross section or contour indicated regardless of method used to show shape, size, and extent of line and grade of completed work.
   2. Provide approved fill material which is free from roots, organic matter, trash, frozen material, and stones having maximum dimension greater than 6 IN.
      a. Ensure that stones larger than 4 IN are not placed in upper 6 IN of fill or embankment.
      b. Do not place material in layers greater than 8 IN loose thickness.
      c. Place layers horizontally and compact each layer prior to placing additional fill.
   3. Compact by sheepsfoot, pneumatic rollers, vibrators, or by other equipment as required to obtain specified density.
      a. Control moisture for each layer necessary to meet requirements of compaction.

3.3 ROCK EXCAVATION

A. All rock excavation shall be under one classification.
   1. This classification shall include solid ledge rock in its natural location that requires systematic quarrying, drilling and/or blasting for its removal and also boulders that exceed 1/2 CY in volume.

B. When rock is encountered, strip free of earth.
   1. Employ an independent surveyor to determine rock quantities before removal operation begins.
   2. In computing the volumetric content of rock excavation for payment, the pay lines shall be taken as follows:
      a. For structures: 3 FT outside the exterior limits of foundations and from rock surface to 6 IN below bottom of foundations.
      b. For piping and utilities: A width 18 IN wider than the outside diameter of the pipe or conduit and from rock surface to 6 IN below bottom exterior surface of the pipe or conduit.
      c. For paving: 2 FT outside the exterior limits of paving and from rock surface to 6 IN below bottom of pavement subbase.

C. The use of explosives shall be limited to the magnitude and location of the charge that will not cause damage to adjacent existing construction and utilities through shock vibrations or other stress loadings.
   1. Provide adequate blanket protection to ensure that there will not be fragments of rock or other debris flying through the air when discharging explosives.
   2. Contractor to employ personnel certified by District to execute blasting operations if the District requires such certification.
      a. Any damage to existing construction or other features caused by blasting operations to be repaired and paid for by Contractor.
   3. Explosive permits shall be obtained from District as per District requirements.
   4. The Contract unit price for rock excavation shall include all equipment and materials and other work necessary for excavation and hauling the rock from the site, and for furnishing and placing suitable replacement material as specified in its place.

D. Where explosives and blasting are used, comply with all laws and ordinances of municipal, state and Federal agencies relating to the use of explosives.
   1. Use qualified personnel for blasting and take proper precautions to protect persons, property or the work from damage or injury from blast or explosion.
   2. Conduct preblast survey in the company of the Engineer to aid in determining any damage caused by blasting.

3.4 USE OF EXPLOSIVES

A. Blasting with any type of explosive is prohibited.

3.5 FIELD QUALITY CONTROL

A. Cost of inspection service indicated herein as being performed by the Soil Engineer shall be paid for by the DISTRICT. Cost for pre-testing shall be the CONTRACTOR'S responsibility, as stated herein

B. Moisture density relations, to be established by the Soils Engineer required for all materials to be compacted.

C. Extent of compaction testing will be as necessary to assure compliance with Specifications.

D. Give minimum of 24 HR advance notice to Soils Engineer when ready for compaction or subgrade testing and inspection.

E. Should any compaction density test or subgrade inspection fail to meet Specification requirements, perform corrective work as necessary.

F. Pay for all costs associated with corrective work and retesting resulting from failing compaction density tests.

3.6 COMPACTION DENSITY REQUIREMENTS

A. Obtain approval from Soils Engineer with regard to suitability of soils and acceptable subgrade prior to subsequent operations.

B. Provide dewatering system necessary to successfully complete compaction and construction requirements.

C. Remove frozen, loose, wet, or soft material and replace with approved material as directed by Soils Engineer.

D. Stabilize subgrade with well graded granular materials as directed by Soils Engineer.

E. Assure by results of testing that compaction densities comply with the following requirements:

1. Sitework:

LOCATION	COMPACTION DENSITY
Under Paved Areas, Sidewalks and Piping:	
Cohesive soils	100 percent per ASTM D698
Cohesionless soils	75 percent relative density per ASTM D4253 and ASTM D4254
Unpaved Areas:	
Cohesive soils	85 percent of ASTM D698
Cohesionless soils	60 percent relative density per ASTM D4253 and ASTM D4254

2. Structures:

LOCATION	COMPACTION DENSITY
Inside of structures under foundations, under equipment support pads, under slabs-on-grade and scarified existing subgrade under fill material	95 percent per ASTM D1557
Outside structures next to walls, piers, columns and any other structure exterior member	90 percent per ASTM D1557

3. Specific areas:

LOCATION	COMPACTION DENSITY
Outside structures under equipment support foundations	95 percent per ASTM D1557
Under void	85 percent per ASTM D1557
Granular fill under base slabs with pressure relief valves, and under building floor slabs-on-grade	75 percent relative density per ASTM D4253 and ASTM D4254

3.7 EXCAVATION, FILLING, AND BACKFILLING FOR STRUCTURES

A. General:

1. In general, work includes, but is not necessarily limited to, excavation for structures and retaining walls, removal of underground obstructions and undesirable material, backfilling, filling, and fill, backfill, and subgrade compaction.

2. Obtain fill and backfill material necessary to produce grades required.
   a. Materials and source to be approved by Soils Engineer.
   b. Excavated material approved by Soils Engineer may also be used for fill and backfill.
3. In this Section of the Specifications, the word "foundations" includes footings, base slabs, foundation walls, mat foundations, grade beams, piers and any other support placed directly on soil.
4. In the paragraphs of this Section of the Specifications, the word "soil" also includes any type of rock subgrade that may be present at or below existing subgrade levels.

B. Excavation Requirements for Structures:
1. General:
   a. Do not commence excavation for foundations for structures until Soils Engineer approves:
      1) The removal of topsoil and other unsuitable and undesirable material from existing subgrade.
      2) Density and moisture content of site area compacted fill material meets requirements of specifications.
      3) Site surcharge or mass fill material can be removed from entire construction site or portion thereof.
      4) Surcharge or mass fill material has been removed from construction area or portions thereof.
   b. Engineer grants approval to begin excavations.
2. Dimensions:
   a. Excavate to elevations and dimensions indicated or specified.
   b. Allow additional space as required for construction operations and inspection of foundations.
3. Removal of obstructions and undesirable materials in excavation includes, but is not necessarily limited to, removal of old foundations, existing construction, unsuitable subgrade soils, expansive type soils, and any other materials which may be concealed beneath present grade, as required to execute work indicated on Contract Drawings.
   a. If undesirable material and obstructions are encountered during excavation, remove material and replace as directed by Soils Engineer.
4. Level off bottoms of excavations to receive foundations, floor slabs, equipment support pads, or compacted fill.
   a. Remove loose materials and bring excavations into approved condition to receive concrete or fill material.
   b. Where compacted fill material must be placed to bring subgrade elevation up to underside of construction, scarify existing subgrade upon which fill material is to be placed to a depth of 6 IN and then compact to density stated in this Specification Section before fill material can be placed thereon.
   c. Do not carry excavations lower than shown for foundations except as directed by Soils Engineer or Engineer.
   d. If any part of excavations is carried below required depth without authorization, maintain excavation and start foundation from excavated level with concrete of same strength as required for superimposed foundation, and no extra compensation will be made to Contractor therefore.
5. Make excavations large enough for working space, forms, dampproofing, waterproofing, and inspection.
6. Notify Soils Engineer and Engineer as soon as excavation is completed in order that subgrades may be inspected.
   a. Do not commence further construction until subgrade under compacted fill material, under foundations, under floor slabs-on-grade, under equipment support pads, and under retaining wall footings has been inspected and approved by the Soils Engineer as being free of undesirable material, being of compaction density required by this specification, and being capable of supporting the allowable foundation design bearing pressures and superimposed foundation, fill, and building loads to be placed thereon.

b. Soils Engineer shall be given the opportunity to inspect subgrade below fill material both prior to and after subgrade compaction.
c. Place fill material, foundations, retaining wall footings, floor slabs-on-grade, and equipment support pads as soon as weather conditions permit after excavation is completed, inspected, and approved and after forms and reinforcing are inspected and approved.
d. Before concrete or fill material is placed, protect approved subgrade from becoming loose, wet, frozen, or soft due to weather, construction operations, or other reasons.

7. Dewatering:
   a. Where groundwater is or is expected to be encountered during excavation, install a dewatering system to prevent softening and disturbance of subgrade below foundations and fill material, to allow foundations and fill material to be placed in the dry, and to maintain a stable excavation side slope.
   b. Groundwater shall be maintained at least 3 FT below the bottom of any excavation.
   c. Review soils investigation before beginning excavation and determine where groundwater is likely to be encountered during excavation.
   d. Employ dewatering specialist for selecting and operating dewatering system.
   e. Keep dewatering system in operation until dead load of structure exceeds possible buoyant uplift force on structure.
   f. Dispose of groundwater to an area which will not interfere with construction operations or damage existing construction.
      1) Install groundwater monitoring wells as necessary.
   g. Shut off dewatering system at such a rate to prevent a quick upsurge of water that might weaken the subgrade.
8. Subgrade stabilization:
   a. If subgrade under foundations, fill material, floor slabs-on-grade, or equipment support pads is in a frozen, loose, wet, or soft condition before construction is placed thereon, remove frozen, loose, wet, or soft material and replace with approved compacted material as directed by Soils Engineer.
   b. Provide compaction density of replacement material as stated in this specification section.
   c. Loose, wet, or soft materials, when approved by Soils Engineer, may be stabilized by a compacted working mat of well graded crushed stone.
   d. Compact stone mat thoroughly into subgrade to avoid future migration of fines into the stone voids.
   e. Remove and replace frozen materials as directed by Soils Engineer.
   f. Method of stabilization shall be performed as directed by Soils Engineer.
   g. Do not place further construction on the repaired subgrades, until the subgrades have been approved by the Soils Engineer.
9. Do not place floor slabs-on-grade including equipment support pads until subgrade below has been approved, piping has been tested and approved, reinforcement placement has been approved, and Contractor receives approval to commence slab construction.
   a. Do not place building floor slabs-on-grade including equipment support pads when temperature of air surrounding the slab and pads is or is expected to be below 40 DegF before structure is completed and heated to a temperature of at least 50 DegF.
10. Protection of structures:
    a. Prevent new and existing structures from becoming damaged due to construction operations or other reasons.
    b. Prevent subgrade under new and existing foundations from becoming wet and undermined during construction due to presence of surface or subsurface water or due to construction operations.
11. Shoring:
    a. Shore, sheet pile, slope, or brace excavations as required to prevent them from collapsing.
    b. Remove shoring as backfilling progresses but only when banks are stable and safe from caving or collapse.

12. Drainage:
    a. Control grading around structures so that ground is pitched to prevent water from running into excavated areas or damaging structures.
    b. Maintain excavations where foundations, floor slabs, equipment support pads or fill material are to be placed free of water.
    c. Provide pumping required to keep excavated spaces clear of water during construction.
    d. Should any water be encountered in the excavation, notify Engineer and Soils Engineer.
    e. Provide free discharge of water by trenches, pumps, wells, well points, or other means as necessary and drain to point of disposal that will not damage existing or new construction or interfere with construction operations.
13. Frost protection:
    a. Do not place foundations, slabs-on-grade, equipment support pads, or fill material on frozen ground.
    b. When freezing temperatures may be expected, do not excavate to full depth indicated, unless foundations, floor slabs, equipment support pads, or fill material can be placed immediately after excavation has been completed and approved.
    c. Protect excavation from frost if placing of concrete or fill is delayed.
    d. Where a concrete slab is a base slab-on-grade located under and within a structure that will not be heated, protect subgrade under the slab from becoming frozen until final acceptance of the Project by the District.
    e. Protect subgrade under foundations of a structure from becoming frozen until structure is completed and heated to a temperature of at least 50 DegF.

C. Fill and Backfill Inside of Structure and Below Foundations, Base Slabs, Floor Slabs, Equipment Support Pads and Piping:
1. General:
    a. Subgrade to receive fill or backfill shall be free of undesirable material as determined by Soils Engineer and scarified to a depth of 6 IN and compacted to density specified herein.
    b. Surface may be stepped by at not more than 12 IN per step or may be sloped at not more than 2 percent.
    c. Do not place any fill or backfill material until subgrade under fill or backfill has been inspected and approved by Soils Engineer as being free of undesirable material and compacted to specified density.
2. Obtain approval of fill and backfill material and source from Soils Engineer prior to placing the material.
3. Granular fill under floor slabs-on-grade: Place all floor slabs-on-grade on a minimum of 6 IN of granular fill unless otherwise indicated.
4. Vapor barrier: Install a continuous vapor barrier under floor slabs-on-grade as required by Section 07190 and shown on Contract Drawings.
5. Fill and backfill placement:
    a. Prior to placing fill and backfill material, optimum moisture and maximum density properties for proposed material shall be obtained from Soils Engineer.
    b. Place fill and backfill material in thin lifts as necessary to obtain required compaction density.
    c. Compact material by means of equipment of sufficient size and proper type to obtain specified density.
    d. Use hand operated equipment for filling and backfilling next to walls.
    e. Do not place fill and backfill when the temperature is less than 40 DegF and when subgrade to receive fill and backfill material is frozen, wet, loose, or soft.
    f. Use vibratory equipment to compact granular material; do not use water.
6. Where fill material is required below foundations, place fill material, conforming to the required density and moisture content, outside the exterior limits of foundations located around perimeter of structure the following horizontal distance whichever is greater:
    a. As required to provide fill material to indicated finished grade.
    b. 5 FT.

c. Distance equal to depth of compacted fill below bottom of foundations.
d. As directed by Soils Engineer.

D. Filling and Backfilling Outside of Structures.
1. This paragraph of this Specification applies to fill and backfill placed outside of structures above bottom level of both foundations and piping but not under paving.
2. Provide material as approved by Soils Engineer for filling and backfilling outside of structures.
3. Fill and backfill placement:
a. Prior to placing fill and backfill material, obtain optimum moisture and maximum density properties for proposed material from Soils Engineer.
b. Place fill and backfill material in thin lifts as necessary to obtain required compaction density.
c. Compact material with equipment of proper type and size to obtain density specified.
d. Use only hand operated equipment for filling and backfilling next to walls and retaining walls.
e. Do not place fill or backfill material when temperature is less than 40 DegF and when subgrade to receive material is frozen, wet, loose, or soft.
f. Use vibratory equipment for compacting granular material; do not use water.
4. Backfilling against walls:
a. Do not backfill around any part of structures until each part has reached specified 28-day compressive strength and backfill material has been approved.
b. Do not start backfilling until concrete forms have been removed, trash removed from excavations, pointing of masonry work, concrete finishing, dampproofing and waterproofing have been completed.
c. Do not place fills against walls until floor slabs at top, bottom, and at intermediate levels of walls are in place and have reached 28-day required compressive strength to prevent wall movement.
d. Bring backfill and fill up uniformly around the structures and individual walls, piers, or columns.

E. Backfilling Outside of Structures Under Piping or Paving:
1. When backfilling outside of structures requires placing backfill material under piping or paving, the material shall be placed from bottom of excavation to underside of piping or paving at the density required for fill under piping or paving as indicated in this Section.
2. This compacted material shall extend transversely to the centerline of piping or paving a horizontal distance each side of the exterior edges of piping or paving equal to the depth of backfill measured from bottom of excavation to underside of piping or paving.
3. Provide special compacted bedding or compacted subgrade material under piping or paving as required by other sections of these Specifications.

3.8 SPECIAL REQUIREMENTS

A. Erosion Control:
1. Conduct work to minimize erosion of site.
2. Construct stilling areas to settle and detain eroded material.
3. Remove eroded material washed off site.
4. Clean streets daily of any spillage of dirt, rocks or debris from equipment entering or leaving site.

END OF SECTION

SECTION 02260
TOPSOILING AND FINISHED GRADING

PART 1 - GENERAL

1.1 SUMMARY

A. Section Includes:
   1. Topsoiling and finished grading.

B. Related Sections include but are not necessarily limited to:
   1. Division 0 - Bidding Requirements, Contract Forms, and Conditions of the Contract.
   2. Division 1 - General Requirements.
   3. Section 02110 - Site Clearing.
   4. Section 02200 - Earthwork.
   5. Section 02270 - Soil Erosion and Sediment Control.
   6. Section 02930 - Seeding, Sodding and Landscaping.

C. Location of Work: All areas within limits of grading and all areas outside limits of grading which are disturbed in the course of the work.

1.2 SUBMITTALS

A. Shop Drawings:
   1. See Section 01340 for requirements for the mechanics and administration of the submittal process.
   2. Project Data: Test reports for furnished topsoil.

1.3 SITE CONDITIONS

A. Verify amount of topsoil stockpiled and determine amount of additional topsoil, if necessary to complete work.

B. After completion of work in planted or improved areas within the public or private easements, CONTRACTOR shall restore such areas to original conditions. Restoration shall include, but is not limited to, regarding and top soiling.

PART 2 - PRODUCTS

2.1 MATERIALS

A. Topsoil:
   1. Original surface soil typical of the area.
   2. Existing topsoil stockpiled under Section 02110.
   3. Capable of supporting native plant growth.

2.2 TOLERANCES

A. Finish Grading Tolerance: 0.1 FT plus/minus from required elevations.

PART 3 - EXECUTION

3.1 PREPARATION

A. Correct, adjust and/or repair rough graded areas.
   1. Cut off mounds and ridges.

2. Fill gullies and depressions.
3. Perform other necessary repairs.
4. Bring all sub-grades to specified contours, even and properly compacted.

B. Loosen surface to depth of 2 IN, minimum.

C. Remove all stones and debris over 2 IN in any dimension.

3.2 ROUGH GRADE REVIEW

A. Reviewed by Engineer in Section 02110, Site Clearing.

3.3 PLACING TOPSOIL

A. Do not place when subgrade is wet or frozen enough to cause clodding.

B. Spread to compacted depth of 4 IN for all disturbed earth areas.

C. If topsoil stockpiled is less than amount required for work, furnish additional topsoil at no cost to District.

D. Provide finished surface free of stones, sticks, or other material 1 IN or more in any dimension.

E. Provide finished surface smooth and true to required grades.

F. Restore stockpile area to condition of rest of finished work.

3.4 ACCEPTANCE

A. Upon completion of topsoiling, obtain Engineer's acceptance of grade and surface.

B. Make test holes where directed to verify proper placement and thickness of topsoil.

END OF SECTION

SECTION 02513
ASPHALTIC CONCRETE VEHICULAR PAVING

PART 1 - GENERAL

1.1 SUMMARY

A. Section Includes:
   1. Asphaltic concrete vehicular paving.

B. Related Sections include but are not necessarily limited to:
   1. Division 0 - Bidding Requirements, Contract Forms, and Conditions of the Contract.
   2. Division 1 - General Requirements.

1.2 QUALITY ASSURANCE

A. Referenced Standards:
   1. Federal Specifications (FS):
      a. TT-P-115F, Paint, Traffic (Highway, White and Yellow).
   2. Construction standards: State of California, Department of Transportation.

B. Miscellaneous:
   1. Should conflicts arise between standard specifications of government agencies mentioned herein and Contract Documents, Contract Documents shall govern.

1.3 SUBMITTALS

A. Shop Drawings:
   1. See Section 01340 for requirements for the mechanics and administration of the submittal process.
   2. Product technical data including:
      a. Acknowledgement that products submitted meet requirements of standards referenced.
      b. Manufacturer's installation instructions.
   3. Asphalt design mix.

PART 2 - PRODUCTS

2.1 MATERIALS

A. Asphaltic Concrete: Type III-C2-AR-4000 as listed in Section 400-4 of the Standard Specifications for Public Works Construction, latest edition for dense grade paving.

B. Asphalt: Viscosity grade AR-4000. Asphalt content in the pavement shall be 5.5 percent to 6.5 percent.

C. Aggregate for Asphalt Concrete: In accordance with Sections 400-1.1 and 400-1.2 of the Standard Specifications for Public Works Construction, latest edition.

D. Aggregate Base Course: Crushed aggregate base as specified in Section 400-2 of the Standard Specifications for Public Works Construction.

E. Prime Coat: Medium curing (MC-70) in accordance with Section 302.5.3 of the Standard Specification for Public Works Construction. All aggregate base areas to be paved over shall receive prime coat.

F. Tack Coat: Shall conform to Section 302-5.4 of the Standard Specification for Public Works Construction.

G. Seal Coat: SS1 asphaltic emulsion.

H. Asphaltic Slurry Seal Aggregate: Type II as listed in Section 203-5.3 of the Standard Specifications for Public Works Construction

I. Line Paint:
   1. Nonreflective.
   2. White.
   3. FS TT-P-115F.

PART 3 - EXECUTION

3.1 INSTALLATION

A. Construct to line, grade and section as shown on Drawings and in accordance with referenced State Specifications.

B. Tolerance of Finished Grade: +0.10 FT from required elevations.
   1. Verify drainage of all paved areas by conducting a water test in the presence of the District or the District's Representative

C. Line Painting:
   1. Thoroughly clean surfaces which are to receive paint.
   2. Make completely dry before paint is applied.
   3. Do not paint until minimum of 5 days has elapsed from time surface is completed. A longer period may be required if directed by Engineer.
   4. Do not apply paint over wet surfaces, during wet or damp weather, or when temperature is below 40 DegF.
   5. Lay out markings and striping in accordance with Drawings. Width of painted lines: 4 IN.

END OF SECTION

DIVISION 11

EQUIPMENT

SECTION 11080
AERATION EQUIPMENT: BASIC REQUIREMENTS

PART 1 - GENERAL

1.1 SUMMARY

A. Section Includes:
   1. Basic Requirements for aeration equipment
      a. Three (3) high speed turbo blowers
      b. Fine bubble aeration system
      c. Aeration system instrumentation
      d. Aeration Master Control Panel

B. Related Specification Sections include but are not necessarily limited to:
   1. Division 0 - Bidding Requirements, Contract Forms, and Conditions of the Contract.
   2. Division 1 - General Requirements.
   3. Section 11005 - Equipment: Basic Requirements.
   4. Section 11085 – High Speed Turbo Aeration Blower .
   5. Section 11088 - Aeration Equipment: Fine Bubble Type.
   6. Section 13442 – Primary Elements and Transmitters
   7. Section 15100 – Valves Basic Requirements
   8. Division 16 – Electrical

C. Coordination:
   1. Each aeration equipment type specified in the related sections shall be supplied through a single manufacturer.
   2. Coordinate all instrumentation from Division 13 of the specifications and contract drawings
   3. Ensure coordination with electrical requirements in Division 16

D. Specific Requirements:
   1. For aeration system equipment, assemble in factory to ensure proper fit to the extent possible.
      a. Mark parts with erection marks, disassemble for shipment.
   2. For equipment furnished under the following Specification Sections:
      a. Specification Section 11085
      b. Specification Section 11088
   3. Employ and pay for the services of authorized manufacturer's factory or service representative to:
      a. Inspect equipment installed by this Specification Section.
      b. Supervise adjustments, perform modifications as necessary.
      c. Conduct start-up of equipment.
      d. Supervise specified performance tests and operational test.
         1) Provide personnel needed to conduct and set up tests, perform testing and calculations.
      e. Write complete field report covering but not necessarily limited to results of installation check, startup, testing, and adjustments.
      f. Instruct Owner's personnel for a minimum period on jobsite on operation of following:
         1) Specification Section 11085: Period (days) 2.
         2) Specification Section 11088: Period (days) 1.

E. Aeration system control
   1. The blower manufacturer selected under Specification Section 11085 shall be responsible for control of the aeration system
   2. The blower manufacturer shall provide the following equipment

a. Three (3) high speed turbo aeration blower in accordance with Specification Section 11085
b. Six (6) dissolved oxygen sensors in accordance with Specification Section 13442
c. Four (4) thermal mass air flow meters and flow conditioners in accordance with Specification Section 13442
d. Aeration Master Control Panel
   1) The Aeration MCP shall meet the requirements of Section 13448
   2) The MCP shall be programmed to operate the aeration system based on control logic set forth in Specification Section 11085 and Section 13441
   3) The MCP shall also control three (3) contractor supplied flow control valves
   4) The MCP shall have additional space for two (2) blowers, two (2) dissolved oxygen sensors, one (1) flow meter, and one (1) flow control valve.

1.2 QUALITY ASSURANCE

A. Referenced Standards:
   1. Comply with the requirements of referenced specifications

1.3 DEFINITIONS

A. SCFM (Standard Cubic Feet Per Minute): Flow of air or gas at standard conditions defined by ASME and CGA with quantity expressed as volume in cubic feet per minute at 68 DegF 14.70 pounds per square inch absolute pressure and 36 percent relative humidity.

B. ICFM (Inlet Volume in Cubic Feet Per Minute): Volume of air or gas in cubic feet per minute (cfm) actually entering the blower device in reference.

C. References: Refer to reference Specification Sections in paragraph 1.1.B for detailed requirements of aeration and associated equipment and requirements included in the Project.

1.4 SUBMITTALS

A. See Specification Section 01340 for requirements for the mechanics and administration of the submittal process.

B. Provide six (6) copies of written report covering "Specifier Requirements" as previously outlined.
   1. Ensure reports are certified by manufacturer of equipment.

1.5 PERFORMANCE TESTING REQUIREMENTS

A. Comply with requirements of referenced Specification Sections

PART 2 - PRODUCTS

PART 3 - EXECUTION

END OF SECTION

SECTION 11085
HIGH SPEED TURBO AERATION BLOWER

PART 1 - GENERAL

1.1 SUMMARY

A. Section Includes:
   1. High speed turbo blower including:
      a. Integral drive unit.
      b. Variable frequency controller.
      c. Valve for blow-off
      d. Discharge isolation butterfly valves.
      e. Blow-off silencer.
      f. Flexible connectors.
      g. Pressure and temperature monitoring devices.
      h. Local control panel (LCP).
   2. Custom software for control.

1.2 SYSTEM DESCRIPTION

A. Turbo blowers shall be installed. The new blowers shall provide process air for aeration basins. Provide blower, driver, and accessories through single manufacturer. External piping, pipe supports, wiring, conduit and appurtenances will be provided by contractor.

B. The blower manufacturer shall provide the aeration system master control panel, dissolved oxygen sensors, air flow meters and flow conditioners. Blower manufacturer shall provide all blower local control panels (LCP) including all network connectivity devices such as Ethernet switches and converts. See specification 11080.

1.3 MANUFACTURER'S QUALIFICATIONS

A. Acceptable blower manufacturer shall meet the minimum following criteria to be considered as a responsive and responsible manufacturer:
   1. Minimum of four units operating in the United States and a minimum of four installations of equal design must have greater than two years in operation.
   2. The blower manufacturer shall be a UL certified 508A shop.
   3. Established base of operation in North America that furnishes experienced technical resources and service personnel to carry out start-up and trouble-shooting.
   4. Service Network in North America providing responses to technical inquiries within eight (8) to twenty-four (24) hours and ships replacement parts within Forty-eight (48) hours.

1.4 SUBMITTALS

A. General:
   1. All products required for submittal under this section shall be furnished in one complete package.

B. Shop Drawing Preparation:
   1. Scope of any submittal and letter of transmittal:
      a. Written in English.
      b. All dimensions in feet and inches or factions thereof.
      c. Handwritten information is not acceptable.
      d. Remove data that does not pertain to the model of equipment being supplied.
   2. Numbering letter of transmittal:

a. Include as prefix the specification section number followed by a series number, "-xx", beginning with "01" and increasing sequentially with each additional transmittal.
b. If more than one submittal under any specification section, assign consecutive series numbers to subsequent transmittal letters.

3. Describing transmittal contents:
   a. Provide listing of each component or item in submittal capable of receiving an independent review action.
   b. Identify for each item:
      1) Manufacturer and Manufacturer's drawing or data number.
      2) Contract Document tag number(s).
      3) Unique page numbers for each page of each separate item.
4. Resubmittals:
   a. Number with original root number and a suffix letter starting with "A" on a (new) duplicate transmittal form.
   b. Do not increase the scope of any prior transmittal.
   c. Account for all components of prior transmittal.
      1) If items in prior transmittal received "A" or "B" Action code, list them and indicate "A" or "B" as appropriate.
         a) Do not include submittal information for items with prior "A" or "B" Action in transmittal.
      2) Indicate "Outstanding-To Be Resubmitted At a Later Date" for any prior "C" or "D" Action item not included in resubmittal.
         a) Obtain Engineer's prior approval to exclude items.
5. For 8-1/2 x 11 IN size sheets, provide three (3) copies of each page for the District plus the number required by the Manufacturer. The number of copies required by the Manufacturer.
6. For Items not covered above submit one reproducible transparency or camera-ready quality print and one additional print of each drawing until approval is obtained. Utilize mailing tube; do not fold. The District will mark and return the reproducible to the Manufacturer for his reproduction and distribution.
7. Manufacturer shall not use red color for marks on transmittals. Duplicate all marks on all copies transmitted, and ensure marks are photocopy reproducible. Outline Manufacturer marks on reproducible transparencies with a rectangular box.
8. Transmittal contents:
   a. Coordinate and identify Shop Drawing contents so that all items can be easily verified by the District.
   b. Identify equipment or material use, tag number, drawing detail reference, weight, and other project specific information.
   c. Provide sufficient information together with technical cuts and technical data to allow an evaluation to be made to determine that the item submitted is in compliance with the Contract Documents.
   d. Submit items like equipment brochures, cuts of fixtures, product data sheets or catalog sheets on minimum of 8-1/2 x 11 IN pages. Indicate exact item or model and all options proposed.
   e. Include legible scale details, sizes, dimensions, performance characteristics, capacities, test data, anchoring details, installation instructions, storage and handling instructions, color charts, layout drawings, parts catalogs, rough-in diagrams, wiring diagrams, controls, weights and other pertinent data. Arrange data and performance information in format similar to that provided in Contract Documents. Provide, at minimum, the detail provided in the Contract Documents.
   f. If proposed equipment or materials deviate from the Contract Drawings or Specifications in any way, clearly note the deviation and justify the said deviation in detail in a separate letter immediately following transmittal sheet.
9. Product Data:
   a. Acknowledgement that products submitted meet requirements of standards referenced.
   b. Manufacturer's installation instructions.
   c. Blower characteristics, specifications, and performance.

1) Descriptive brochures and blower data.
2) Factory certified performance curves indicating speed, capacity, horsepower, and efficiency over the range of operation.
3) SCFM at discharge pressure.
4) Surge pressure.
5) Surge flow.
6) Brake horsepowers at identified points.
7) Material list and catalog information showing the details of blower construction.
8) Outline installation drawings for each unit.
9) Blower weight and weights of each separate item of equipment.
10) Complete bill of materials of all components and equipment supplied.

d. Motor characteristics, specifications, and performance.
1) Descriptive bulletins.
2) Outline drawings with dimensions.
3) Cut-away and exploded view drawings.
4) Parts list with material designations.
5) Nameplate data.
6) Description of insulation system.
7) Service factor.
8) Efficiency at ½, ¾, and full load.
9) Power factor at ½, ¾, and full load.

e. Furnish a detailed identification of couplings, supports, and accessories. Identify valves and instrumentation with designated tag numbers.

f. Test reports:
1) Certified acoustical test results for each blower package.
2) Certified and guaranteed wire to air power test results.
3) Certified report of dynamic balancing and maximum vibration amplitude.
4) Certified blower performance test in accordance with ASME PTC 10 and/or other applicable test codes such as IS05389:1992, VDI 2045:1993.

10. Certified dimensional drawings of the blower unit, including cutaway views.
11. Instrumentation and control system schematics, tubing and conduit details, and wiring diagrams for electrical and control components furnished.

C. Operation and Maintenance Manual preparation:
1. Submit two copies in plastic or fiber 3-ring or 3-post binder until approved.
a. Contents shall be type written. Hand written notations will not be accepted.
b. Contents shall be tailored specifically to this project.
c. After acceptance, provide:
1) Two copies in 3 post heavy plastic binders.
2) Two copies in ".pdf" format on a CD-ROM.
a) Table of Contents "Bookmark" hyperlinked to each section.

2. Identify resubmittals with the original number plus a suffix letter starting with "A."
3. All submittals under this part shall be in the form of a "PDF" file containing all printed or electronic material arranged in a satisfactory manner to permit easy identification of each component of the submittal. Scanning of originals shall be done at a minimum of 600 dpi resolution irrespective of size of the original document. Coordinate with the District to ensure compatibility of the version number to be used for creating and reading Adobe Acrobat PDF's. **No printed paper copies under this section will be accepted by the District.**
4. Bookmark each section of manual within pdf format for easy reference. Provide index for each manual.
5. Reduce drawings or diagrams bound in manuals to an 8-1/2 x 11 IN or 11 x 17 IN size. However, where reduction is not practical to ensure readability, provide pdf file of any oversize drawings and a folded copy of any oversized drawings and diagrams within the manual.
6. Transmittal contents:

a. Operation and maintenance manuals shall include, but not necessarily be limited to, the following detailed information, as applicable:
    1) Equipment function, normal operating characteristics, limiting operations.
    2) Assembly, disassembly, installation, alignment, adjustment, and checking instructions.
    3) Operating instructions for start-up, routine and normal operation, regulation and control, shutdown, and emergency conditions.
    4) Lubrication and maintenance instructions.
    5) Guide to "troubleshooting."
    6) Parts list and predicted life of parts subject to wear.
    7) Outline, cross-section, and assembly drawings; engineering data; and electrical diagrams, including elementary diagrams, wiring diagrams, connection diagrams, word description of wiring diagrams and interconnection diagrams.
    8) Test data and performance curves.
    9) A list of recommended spare parts with a price list and a list of spare parts provided under these specifications.
    10) Copies of installation instructions, parts lists or other documents packed with equipment when delivered.
    11) Instrumentation or tag numbers relating the equipment back to the Contract Documents.
    12) Include a filled-out copy of the Equipment Record Sheet, Exhibits C1 and C2 as the first page(s) of each Operation and Maintenance Manual. Complete maintenance requirements in detail. Simple reference to the Manual is not acceptable.
    13) For equipment items involving components or subunits, an Equipment Record Sheet for each operating component or subunit is required.

7. Equipment shall not be started until a manufacturer Operation and Maintenance manual has been submitted and approved.
8. Operation and maintenance manual will include the following:
    a. All dimensions, calculations and other information to be in USA English units of measure.
    b. Provide a list of components and catalog cuts fully describing all items:
        1) Mechanical and structural components.
        2) Instruments.
        3) Programmable Logic Controllers (PLC).
        4) Operator Interface/machine monitors.
        5) Electrical components.
    c. General description of blower with all performance data, blower curves, and model. Provide detailed information on structural, mechanical, electrical, or other changes or modifications necessary to adapt non-specified materials to the arrangement or details shown. Include the actual ASME PTC 10 test report.
    d. Mechanical drawings with general arrangement showing enclosure dimensions, overall weights, weights of largest components requiring removal for maintenance, and clearances required around unit for maintenance access. Indicate surface preparation and paint specifications.
    e. Description of process control logic and process and instrumentation diagrams.
    f. Drawings of all control panels to include:
        1) Electrical ladder diagram.
        2) Interconnect to all components outside the panel.
        3) Door layout.
        4) Interior layout.
        5) Sample Operator Interface screens for the LCP.

g. Operating description for LCP. Provide for backup purposes, a copy of the software ladder logic covering all logic and sequences of operation. Provide a soft copy of all documented PLC code on CD. Provide for backup purposes, the District with one (1) software licenses for all PLC and Touchscreen OIT software that is used. Licenses must be registered to GSD. Provide a list of instrument settings.
h. Provide a detailed description of the data acquisition, monitoring, and predicted preventative maintenance software. Where applicable, provide typical Operator Interface screens with detailed descriptions, the various tattletale monitors, preventative maintenance items, and data logging features.
i. Provide input/output (I/O) listing for all control panel PLCs.
j. Indicate all scheduled maintenance requirements and routine inspections. Include maintenance summary forms.
k. Provide list of recommended spare parts and lubricants.
l. Provide a troubleshooting guide.
m. Provide the local sales representative contact information with the company name, contact person, phone number and address.

1.5 DELIVERY AND UNLOADING

A. Scheduling:
1. Manufacturer shall make all arrangements for transportation and delivery of equipment and materials to the Point of Delivery.
2. Indicate delivery on construction schedule and coordinate delivery with the District accordingly.
a. Shipments shall be delivered only during regular working hours.

B. Packaging:
1. Deliver products or equipment in manufacturer's original unbroken cartons or other containers designed and constructed to protect the contents from physical or environmental damage.

C. Identification:
1. Clearly and fully mark and identify as to manufacturer, project name, item, and installation location.
2. Partial deliveries of component parts shall be clearly marked to identify the equipment, to permit easy accumulation of parts and to facilitate assembly.

D. Protection and Handling:
1. Provide manufacturer's instructions for storage and handling to the Contractor.
2. Provide the Contractor with lists of Goods which could be damaged by low or high temperature and require temperature controlled storage.
3. Provide the Contractor with a list of Goods required to be protected from contamination by dust, dirt and moisture.
4. Provide the Contractor with a list of Goods required to be maintained at manufacturer recommended humidity levels.
5. Notice of Enclosed Instructions: All delivered packages containing Goods shall have notices clearly visible on the exterior of the package indicating that maintenance instructions are enclosed.
6. The manufacturer shall package all equipment for suitable outside storage at the Goleta, California weather.

E. Delivery and unloading:
1. All parts and equipment shall be delivered to the Goleta Wastewater Treatment Plant.
2. The District or his representative shall supervise unloading of equipment, the contractor will unload equipment.
3. Contractor shall insure equipment is properly stored after off-loading in accordance with Storage subsection below.

F. Manufacturer's Instruction:

1. Protect all products or equipment in accordance with manufacturer's written directions.
    a. Store products or equipment in location to avoid physical damage to items while in storage.
    b. Handle products or equipment in accordance with manufacturer's recommendations and instructions.
2. Protect equipment from exposure to elements and keep thoroughly dry. If necessary, provide packaging and equipment protection suitable for outdoor exposure during shipment.

G. Painted surfaces shall be protected against impact, abrasion, discoloration, and other damage. Painted equipment surfaces that are damaged prior to acceptance shall be repainted.
1. All parts shall be protectively wrapped and/or packaged, using materials commensurate with the weight and configuration of the part, the method of handling, and the method of transportation.
2. Contact or pressure points shall be sufficiently protected when using steel or elastic banding.
3. Cabinets and equipment too heavy to be handled or transported by one man shall be adapted for handling with pallet trucks and/or forklifts.
4. Painted surfaces which will come in contact with lifting forks or other handling equipment (such as the bottom of cabinets or skid base frame members) shall be sufficiently padded with heavy corrugated cardboard, foam or other protective materials.
5. Small equipment and skids shall be mounted on wooden pallets designed for fork lifting. This equipment shall be bolted (using existing holes in the frame) or strapped to the pallet to prevent tipping. Equipment and skids too large to be mounted on pallets shall have wooden block bolted or strapped to the base foundation pads to prevent paint degradation during handling, assembly and installation.

H. Electrical equipment, controls, and instrumentation shall be protected against moisture or water damage. Space heaters provided in the equipment will be connected by the contractor as noted by the Manufacturer and operated at all times until equipment placed in operation.

I. Blower shall be delivered to the site as assembled units to the fullest degree possible.

J. Panel and Instrumentation Storage: All packages containing panels, electronic devices, and other microprocessor-based equipment shall contain a desiccant, volatile corrosion inhibitor (VCI) blocks, a moisture indicator, and maximum-minimum indicating thermometer. The Manufacturer shall provide a spare set of such protective equipment including a desiccant, a moisture indicator, and VCI blocks for each package containing panels, electronic devices, and other microprocessor-based equipment for replacement by the contractor during the storage period.

K. Storage:
1. Contractor shall store equipment after delivery.
2. Contractor shall store and protect equipment in accordance with the following requirements:
    a. Store immediately upon delivery.
    b. Store products in accordance with Manufacturer’s instructions.
    c. Store electrical equipment in weather tight structures.
    d. Protect electrical equipment, controls and insulation against moisture, water, and dust damage.
    e. Connect and operate continuously all space heaters furnished in electrical equipment.
    f. Store fabricated products above the ground, on blocking or skids, prevent soiling or staining.
    g. Arrange storage in a manner to provide easy access for inspecting. Make periodic inspections of stored products to assure that products are maintained under specific conditions, and free from damage or deterioration.
    h. Store membrane modules in heated storage area.

L. Inspect Deliveries:

1. Manufacturer, or his designate representative, shall inspect all products or equipment delivered to the site prior to unloading. Reject all products or equipment that are damaged, used, or in any other way unsatisfactory for use on Project.

1.6 POWER GUARANTEE

A. The BLOWER MANUFACTURER shall submit the guaranteed wire-to-air ("wire") KW for the blower unit. The wire KW shall include all losses associated with the blower unit at all specified operating points. The guaranteed wire KW's of the blower unit shall not exceed the following
   1. Design Point 1 Site Conditions:
      a. Site Pressure: 14.7 psia
      b. Inlet Temperature: 65°F
      c. Relative Humidity: 79%
   2. Design Point 2 Site Conditions:
      a. Site Pressure: 14.7 psia
      b. Inlet Temperature: 65°F
      c. Relative Humidity: 79%
   3. Design Point 3 Site Conditions:
      a. Site Pressure: 14.7 psia
      b. Inlet Temperature: 70°F
      c. Relative Humidity: 75%
   4. Design Point 4 Site Conditions:
      a. Site Pressure: 14.7 psia
      b. Inlet Temperature: 80°F
      c. Relative Humidity: 70%

Minimum Guaranteed Wire Power

Design Point	Description of Design Point	Air Flow per blower, SCFM	Discharge Pressure, psig	Guaranteed Wire Power (*) per Blower, KW
1	Startup Minimum Flows	1,250	8.6	48
2	Future Annual Average Operation	2,000	8.9	72
3	Future Maximum Month Operation	2,800	9.0	103
4	Maximum Design Flow	3,000	9.3	119

*Wire KW consists of Blower, Motor, VFD or inverter, and any cooling or other auxiliary systems.
--SCFM measured at conditions listed in table.

B. The guaranteed wire power KW numbers at the above specified operating points shall be "guaranteed" per ASME PTC-10 testing and/or other applicable test codes such as ISO5389:1992, VDI 2045:1993 numbers with zero plus tolerance.

1.7 CONTRACT PRICE ADJUSTMENT

A. The guaranteed wire KW of the blower unit (including the motor, intake filter, VFD or inverter, and cooling system, if used) shall be proven by measuring each guarantee point during the factory tests. Should the factory tests show that the actual wire KW is more than the guaranteed wire KW, the contractor will adjust the contract price as follows:

Adjusted contract price = A minus B.

A = Contract price
B = $10,000.00 times C if C is greater than zero
C = Sum of evaluated wire KW

"C" shall be calculated as follows:

Design[1] Point	Evaluation Factor	Actual Wire KW Minus Guaranteed Wire KW	Evaluated[2] KW
1	0.25	[_____]	[_____]
2	0.30	[_____]	[_____]
3	0.25	[_____]	[_____]
4	0.20	[_____]	[_____]
"C" (sum of above)			_____

(1) These design points shall be the design points as specified in the "power guarantee" section of these Specifications.

(2) Evaluated KW = evaluation factor times (actual wire KW minus guaranteed wire KW). Evaluated KW will equal 0 if the Evaluated KW is less than 0.

B. Adjustment will be made to the payment during the time period the invoice for blower units is submitted.

C. No credit shall be allowed in the case where total actual wire hp is less than the total guaranteed wire KW.

PART 2 - PRODUCTS

2.1 ACCEPTABLE MANUFACTURERS

A. Subject to compliance with the Contract Documents, the following Manufacturers are acceptable:
   1. Neuros – as base bid
   2. K-Turbo – acceptable alternative
   3. No substitutes.

2.2 GENERAL

A. Blowers shall be high speed turbo blower design.

B. The blower manufacturer shall supply, coordinate, start-up, and calibrate all items specified in this section.

C. After reaching operational speed, noise emission from the blower package shall not exceed 80 dBa at the machine location, at the air intake and at the discharge piping system, without any special sound attenuation installed in the blower room.

D. An equipment pad shall be provided for each blower as shown in the contract drawings.

2.3 DESIGN CONDITIONS

A. All the conditions specified herein shall be as defined in ASME PTC 10 - 1997 Performance Test Code on Compressors and Exhausters (re affirmed in 2003) and/or other applicable test codes such as ISO 5389:1992 Turbo Compressors, VDI 2045:1993 Acceptance and Performance Tests on Turbo Compressors and Displacement Compressors. All the pressures and temperatures specified herein refer to stagnation conditions as defined in ASME PTC-10 and/or other applicable tests codes such at ISO 5389:1992, VDI 2045:1993. Inlet conditions are defined as the conditions that exist at the inlet flange of the blower. The discharge conditions are defined as the conditions that exist at the discharge flange of the blower or the discharge cone. The blower shall be designed to handle filtered air for the following rated conditions:
   1. Elevation: 20 feet above sea level.

2. Maximum pressure loss in inlet filter/silencer: 0.5 psi.
3. Total system volumetric flowrate of air required: 5,286 scfm (corrected to 14.7 psia, 68 degrees Fahrenheit, and 36 percent RH).
4. Stagnation inlet conditions:
   a. Pressure: 14.7 psia.
   b. Temperature: 68 degrees Fahrenheit.
   c. Coincident relative humidity (RH): 36 percent.
5. Discharge stagnation pressure: 9.0 psia.

B. When the blower is operating at or between any of the combinations of the following conditions, the electrical power draw (stated as horsepower) of the job motor shall not exceed 150 HP and the blowers shall not surge.
1. Stagnation inlet conditions:
   a. Pressure: 14.7 psia.
   b. Temperature: 20 to 100 degrees Fahrenheit.
   c. RH: 36 to 100 percent.
2. Inlet capacity: 1000 to 2800 scfm per blower.
3. Discharge stagnation pressure: 9.0 psig.
4. Blowers shall be capable of a minimum turndown to 30 percent of rated flow rate.

C. The blower shall maintain a minimum of 2.0 psig away from surge at any operating point in the capacity range above. The blowers shall be capable of operating continuously and satisfactorily at any point between the minimum and the maximum flows without surge, vibration, hunting, or excessive heating of the bearings.

D. The blower manufacturer shall inform the Contractor regarding to the additional requirements, if needed but not shown on P&IDs and the electrical drawings for the new blower integration needs with the existing blowers. The additional requirements, if needed, shall be included in the bid package as part of the requirements for the project. The blower manufacturer shall be responsible to inform the Contractor of any external wiring and conduit requirements.

2.4 ENCLOSURES

A. The standard enclosure shall also act as a sound enclosure and must be designed for easy inspection and maintenance of all blower package components. Hinged doors shall provide easy and quick access for routine maintenance of the blower and the package components. Doors shall use a frame, reinforcements and supporting elements as required.

2.5 BLOWER

A. Blower shall be air bearing or magnetic bearing type turbo blowers and shall not require oils or lubricants for adequate operation. Blowers shall be capable of variable speed and output operation.

B. Blower manufacturer shall be a certified 508A panel shop.

C. Blower casing shall have a maximum continuous duty design temperature of 400 degrees Fahrenheit, and a design pressure of 50 psig.

D. Blower impellers shall be of the backswept three dimensional high efficiency configuration, designed using Computational Fluid Dynamics (CFD) with two stages in one (axial and centrifugal), and milled from forged aluminum alloy or cast stainless steel and with first lateral critical speed at least 120 percent of the maximum allowable operating speed. The impeller shall be mounted directly to the motor shaft and shall be statically and dynamically balanced. The axial gap between the impeller and blower casing shall be adjusted by shims as needed.

2.6 MOTORS

A. Each blower shall be supplied with a high-efficiency motor that shall operate on 460 Volts, 3 Phase, 60 Hertz current, and be totally enclosed, fan cooled.
1. The maximum allowable motor horsepower shall be 150 HP.

2. The non-special duty motor shall have a 1.15 service factor.
3. The motor shall be able to start under the starting conditions required.
4. The blower manufacturer shall be responsible for coordinating the starting torque requirement of the blower and the motor.
5. The motor shall be capable of continuous operation at full load and rated frequency with a voltage variance of +/- 10 percent of the nameplate voltage.
6. The motor shall be capable of operation at the rated voltage with a variance of +/- 5 percent of the nameplate frequency.
7. Motor Accessories:
   a. The motor and controls shall not require any space heaters.
   b. The winding shall be provided with embedded thermocouples for remote temperature sensing and alarm.

2.7 INLET AND DISCHARGE SILENCERS

A. If Manufacturer requires silencers, these shall be included in his proposal price.

2.8 FLEXIBLE CONNECTOR

A. If a different size expansion joint is required to connect to the 10-inch piping, provide expansion joint in manufacturer's proposal price. Expansion joint to be EPDM discharge expansion joint capable of withstanding the vacuum, pressure, and temperature under all operating conditions. The expansion joint shall be included with control rods and carbon steel flanges drilled for ASME/ANSI 10 Inch, Class 150 bolt pattern.

2.9 BLOW OFF (BYPASS) VALVE

A. Provide manufacturer's standard actuated blow-off valve. Controls for the valve shall be mounted in each blower LCP.

2.10 CHECK VALVE

A. Provide each blower with discharge check valve rated for temperatures up to 300 degrees Fahrenheit. Check valves shall be in accordance with specification sections 15100 and 15106.

B. Check valves shall be especially designed and suitable for use with high speed turbo blowers, and shall retain positive sealing capability at 300 degrees Fahrenheit.

2.11 DISCHARGE VALVES

A. Provide blower with a flange type discharge butterfly valves. Provide manual hand wheel actuator. Valve and elastomers shall be designed for 300 DegF operating conditions.

B. All butterfly valves shall comply with specifications sections 15100 and 15103.

2.12 BLOW OFF SILENCER

A. A blow off silencer shall be provided for the blow-off (bypass) valve internal baffles, packed with sound absorbent material, shall direct airflow around three 90-degree turns in an annular flow configuration. The blow off silencer shall be an integral unit, fitted with 1 flange for direct bolting to the blow off valve. Silencer sound attenuation shall be not less than 20 dB.

2.13 INSTRUMENTATION

A. The aeration blower supplier shall provide the blower instrumentation including network connectivity devices for the PLCs described in this section and shown on the P&IDs. All instruments, at a minimum, shall be as specified in this section and shall comply with specification section 13442 unless otherwise specified in this section.

B. Each Blower shall be supplied with a UL certified VFD inverter 6 pulse VFD with harmonic filter.

C. Each blower shall be equipped with an Allen Bradely MicroLogix integral touch screen PLC based control system and integral inverter for motor speed control.

D. All controls, alarms and monitoring shall be accessible through a touch screen control panel or touch pad with display.

E. Ethernet communication shall be provided for all status information.

F. Instrumentation for each blower shall include, as a minimum:
   1. Inlet air temperature gauge or monitoring system.
   2. Inlet air temperature transmitter 4-20 mA or monitoring system.
   3. Surge switch or surge detection monitoring.
   4. Discharge air pressure gauge or monitoring system.
   5. Discharge air pressure transmitter or monitoring system.
   6. Blower air flow rate or monitoring system.
   7. Blow off valve limit switches (open/closed) if needed by blower manufacturer.
   8. The thermocouple monitoring system shall monitor and display actual winding temperatures at the LCP. A high temperature (as determined by the blower manufacturer) shuts down the blower and gives an alarm. The PLC or touch pad with display shall receive and the Operator Interface shall graphically display the thermocouple signals. The alarm/shutdown shall be displayed until reset. Provide necessary hardware for direct communication between thermocouple, PLC or touch pad display, and Operator Interface.
   9. Refer to drawing I425 to I431 for instrumentation tag number and to verify instruments to be provided at minimum by the ABSS.

G. Network Description:
   1. All network equipment, PLCs, OITs, and HMIs, at a minimum, shall comply with specification sections 13500 and 13504, unless otherwise specified in this section.
   2. The Aeration Basin Blower PLC (AER PLC) and the PLCs at each blower local control panel will be provided by the ABSS. Each of the blower LCPs will have a local OIT. The AER PLC will have an HMI. The OIT and the HMI will also be provided by the ABSS.
      a. The AER PLC at the blower shall be a Modicon Quantum PLC
      b. The blower OITs shall have a (minimum) 12” touchscreen , color.
      c. The HMI at the AER PLC shall be a Modicon Magelis. It shall have a (minimum) 12” color touchscreen.
   3. Communications:
      a. The ABSS will be responsible for the communications between the AER PLC and the local blower PLCs. The ABSS will also be responsible for the communication between the local blower PLCs and their respective OITs.
         1) Ethernet communications shall be provided between the AER PLC and the PLCs in the blower LCPs
         2) Ethernet communications shall be provided between the AER PLC and the plant computer systems (SCADA). Compatible interface between the AER and the plant computer system shall be the responsibility of the system integrator; however, the ABSS shall actively participate in this compatible interface by ensuring proper configuration and setting up a tag database according to the District’s standards. Refer to SCADA block diagram, drawing I-003, note 3 of contract document.
      b. Screens development:
         1) The ABSS will be responsible for developing the screens for the blower OITs.
         2) The SI will develop the screens for the ABSS supplied HMI; however, the ABSS will coordinate this effort with the SI to ensure that, at minimum, the local control of the blowers is reflected in the SI’s screen design.

H. OPERATION STRATEGY
   1. Local operation
      a. See section 13510-3.2F.

b. Each Blower LCP will transmit the following signals to Aeration Master Control Panel (MCP): Blower running, fail, speed, local/remote mode, total elapsed time, power, and current. In addition to the above signals, MCP will also provide local status and indication of signals including but not limited to the following: Inlet filter pressure differential, Inlet air temperature, Blower discharge temperature and pressure, Flow rate in common air header, Flow rate to each aeration tank, and Dissolved oxygen in each tank. MCP shall transmit the signals as shown on the contract drawing to SCADA.

2. Automatic operation
   a. All Blowers set in Remote mode, MCP shall control operation of all Blowers automatically according to system wide decisions made by the MCP program based upon operator selectable parameters.
   b. The MCP shall monitor health and operational status of each Blower in the system. The operator can select the lead Blower from the MCP HMI, or may select the automatic alternation method. When in automatic alternation mode the lead Blower is changed after an operator set number of run hours changeable on the HMI. If any Blower is out of service for any reason the next ready blower takes its position, and the succession continues.
   c. MCP shall provide a Blower staging control for operation of all Blowers. In all control modes the MCP shall bring on and turn off Blowers according to their position in the lead / lag sequence.
   d. MCP shall have an aeration control package that can provide aeration control in one of the two methods, flow control and dissolved oxygen (DO) control, selected by the operator on the MCP or SCADA HMI.
   e. In flow control method, operator shall enter a set point for the desired air flow into each aeration tank. Based upon this air flow set point and signal from a flow meter on the tank air header pipe, the modulating valve shall be controlled using a PID based algorithm to open or close the valve to provide the desired amount of air flow to the tank.
   f. In DO control method, operator shall enter a desired DO set point for each aeration tank. Based on the DO set point for the tank, a PID algorithm shall calculate the required air flow set point.
3. Fault conditions
   a. Each Blower LCP shall control the startup and shutdown sequences of each Blower associated with it. If the Blower fails for any reason, operator intervention will be required to clear the failed status.
   b. All fail signals from Blower shall be indicated by a common fail light on the LCP with a fault signal indicated on MCP and SCADA HMI. Pushing the reset pushbutton from the LCP shall reset the fail relay(s).

2.14 SURFACE PREPARATION AND SHOP PRIMING

A. All carbon steel or iron surfaces shall be prepared, shop primed, and finish painted with two finish coats of epoxy paint system or powder coated.

B. Machine surfaces that are not painted shall be protected by coating with a corrosive protective compound.

2.15 SOURCE QUALITY CONTROL

A. Upon completion of assembly, the blower, package shall be functionally tested at the place of assembly. Factory testing shall be made available to the Witnessing Engineer as designated by the District or representatives of the District.

B. At a minimum, the blower system shall be factory tested for a duration of not less than 8 hours at maximum load and maximum temperature and at each design point listed in this specification.

C. The entire blower system shall be tested as an operational system before shipment. The LCP shall be connected to all enclosure instruments, electric valves, and appurtenances. All start/stop and running sequences and all safety and alarm systems shall be tested. The Witnessing Engineer shall sign the test procedure and results, certifying that the assembled blowers, system were tested together, as a system, in the blower manufacturer's shop.

D. The blower shall be performance tested in accordance with the ASME PTC 10 - 1997 Performance Test Code on Compressors and Exhausters (re affirmed in 2003) and/or other applicable test codes such as IS05389: 1992 Turbo Compressors, VDI 2045: 1993 Acceptance and Performance Tests on Turbo Compressors and Displacement Compressors. All tests shall be conducted at the constant pressure as shown on the performance tables contained in these specifications. Tests shall be conducted using the test rig.

E. A calibrated wattmeter or other measuring means shall measure the electrical shaft power input to the VFD drive including all auxiliary systems. Measured power shall include wire-to-air and include all losses associated with electrical shaft power, including, but not limited to the motor, inverter, and cooling system, if used.

F. The Witnessing Engineer shall sign each copy of the test data log sheet certifying that the required tests were performed in strict accordance with these specifications and the ASME PTC 10 Codes and/or other applicable test codes such as IS05389: 1992 Turbo Compressors, VDI 2045: 1993 Acceptance and Performance Tests on Turbo Compressors and Displacement Compressors:
   1. The capacity of the blower shall be defined by the appropriate sections of the test codes. Air flow shall be measured on the discharge side of the compressor.
   2. All test equipment shall be calibrated and certified by an independent test agency no more than 12 months prior to the test date. Certificates shall show the stability of calibration over a period of at least one year per ISO 9001, Paragraph 4.11.
   3. Velocity vibration versus frequency levels shall be recorded within 10-1,000 and 10-10,000 Hz frequency range. Report vibration in velocity versus frequency.

G. The blower test report shall present computations in exact accordance with the appropriate section or testing codes with performance curves showing capacity, pressure, and horsepower inputs.

H. Test results of the motors and blowers shall be included in the Operations & Maintenance Manual.

2.16 MAINTENANCE AND SPARE PARTS

A. Furnish all special tools and appliances necessary to disassemble, service, repair, and adjust the blower equipment and appurtenances. The following spare parts shall be furnished:
   1. One (1) complete set of air filters for each blower furnished.
   2. One (1) set of instrumentations for a blower motor package.
   3. One (1) set of fuses for each blower.
   4. One (1) Blow-off valve assembly.

B. All spare parts shall be suitably packaged and clearly identified with indelible marking on the containers. Tools and spare parts (except for the air filters) shall be supplied in a tool chest for long-term storage and marked with manufacturer's name, along with a complete description on contents.

PART 3 - EXECUTION

3.1 INSTALLATION

A. Comply with manufacturer's written instructions.

3.2 FIELD QUALITY CONTROL

A. At a minimum, each blower package shall be factory tested for duration of not less than 24 hours at maximum load and design air flows listed in this specification.

B. The Manufacturer shall provide third party electrical mitigation testing of all VFDs associated with the blower system. The third party testing shall:
   1. Demonstrate to the satisfaction of the District that there is no harmonic distortion to the electrical system per IEEE 519.
   2. Be performed for a duration of not less than 24 hours.
   3. Be repeated if necessary at no cost to the District if there are any malfunctions during the test.

C. Noise Level:
   1. The blower manufacturer shall include all necessary provisions for reducing noise to meet the maximum sound pressure level requirements of this section (excluding piping noise).
   2. The maximum sound pressure level at any point at a distance of 3 feet or more from any blower/motor surface shall not exceed 80 dBA with the blower running at any speed:
      a. The blower manufacture shall provide certified factory testing of the blower noise level.
      b. The specified maximum sound pressure level of 80 dBA includes the noise emitted from the blower package including but not limited to, the noise from the motor; the blower; fittings, valves and silencers.
      c. The blower manufacture shall supply any additional silencers required to achieve this noise level prior to installation.
   3. The sound pressure level also shall be measured during the preliminary equipment tests of field testing after installation in the Blower Room and with one blower running and noted in the operation and maintenance manual.

3.3 BLOWER MANUFACTURER'S FIELD SERVICES

A. The blower manufacturer shall have an established base of operation in North America that furnishes experienced technical resources to continually improve the product and service personnel to carry out start-up and trouble-shooting.

B. The blower manufacturer shall have an already developed Service Network in North America to support the operation of the blower; providing responses to technical inquiries within eight (8) to twenty-four (24) hours and ships replacement parts within Forty-eight (48) hours.

C. The VFD and PLC shall be supplied by US based manufacturers that provide local parts and technical support service.

D. The blower manufacturer must provide onsite technical personnel to inspect the final installation and supervise the field start-up tests of the equipment and software. The services of the representative shall be provided for a minimum of three (3), 8-hour days for the blower. If there are difficulties in operation of the equipment due to the blower manufacturer's fabrication and programming, additional service shall be provided at no extra cost to the District:
   1. Provide, as a minimum, the following field services: Provide written documentation for check out including who performed the work, when performed, what was final setting or tolerance and who witnessed the final settings:
      a. Verify proper connection of piping and installation of accessories.
      b. Check leveling of blower enclosure.
      c. Confirm proper wiring of all instruments and field wired items.
   2. A minimum 4 hour, for each blower, field acceptance test shall demonstrate that, under all conditions of operation, each unit:
      a. Has not been damaged by transportation or installation.
      b. Has been properly installed.
      c. Have no mechanical defects.
      d. Has fully functional instrumentation that are properly calibrated and set.
      e. Will start, run, and stop in the prescribed manner.

f. Will run through the entire range of specified pressure and flow.
g. Has the proper shutdown sequence of standard stop, soft stop, and emergency stop.
h. Is free of overheating of any parts.
i. Is free of objectionable vibration and noise.
j. Is free of overloading of any parts.

3. Field acceptance testing shall be conducted after the installation of all equipment has been completed and all instrumentation calibrated and working as intended and the equipment has operated for a sufficient period to make all desirable corrections and adjustments.

E. The blower manufacturer shall have the services of the programmer responsible for programming the blower readily available. The services of the programmer shall be provided for a minimum of 2, 8-hour days to assist the contractors programmer with programming and troubleshooting of blower software program as well as coordinate with monitoring for the plant SCADA system. The programmer must have complete knowledge of proper blower operation and of the blower software programs supplied in this section.

F. The blower manufacturer shall include an allowance to provide an experienced start up/service factory representative to be present during the phases of start-up and testing and provide minimum 8-hour training to GSD operation staff..

END OF SECTION

SECTION 11088
AERATION EQUIPMENT: FINE BUBBLE TYPE

PART 1 - GENERAL

1.1 SUMMARY

A. Section Includes:
1. Fine bubble aeration equipment.
   a. Fixed header fine bubble diffused aeration system including diffuser elements, dropleg, manifold, air distribution headers and supports.

B. Related Sections include but are not necessarily limited to:
1. Division 0 - Bidding Requirements, Contract Forms, and Conditions of the Contract.
2. Division 1 - General Requirements.
3. Section 11080 - Aeration Equipment: Basic Requirements.

1.2 QUALITY ASSURANCE

A. Referenced Standards:
1. See Section 11080.

1.3 SUBMITTALS

A. Shop Drawings:
1. See Section 01340 for requirements for the mechanics and administration of the submittal process.
2. Product technical data including:
   a. Acknowledgement that products submitted meet requirements of standards referenced.
   b. Manufacturer's installation instructions.
3. Fabrication and/or layout drawings.
   a. Details of diffusers.
   b. Details of supports.
   c. Layouts of headers. (Plan and Sections).
   d. Air distribution calculation.
   e. Headloss calculations. (Diffusers to top of dropleg over the air flow range specified.)
   f. Performance curves. (Headloss versus diffuser air flow over the air flow range specified.)
4. Performance test data. (Results and report.)

PART 2 - PRODUCTS

2.1 ACCEPTABLE MANUFACTURERS

A. Subject to compliance with the Contract Documents, the following Manufacturers are acceptable:
1. Sanitaire.
2. Aquarius.
3. EDI.

2.2 MATERIALS

A. Diffusers:

1. Provide a minimum number of diffusers per zone. See Schedule below. Furnish nominal 9 IN disk-type rubber membrane disk diffusers. Furnish diffuser assemblies consisting of diffuser membrane, diffuser element, diffuser element holder, sealing gasket, air flow control orifice and retaining device. Ensure diffuser elements provide uniform distribution of air bubble release across the active surface of the diffuser elements.

Zone	Number of Diffusers
Zone 1	96
Zone 2	72
Zone 3	66
Zone 4	66

2. Divide each basin into 4 equally sized aeration grids. Arrange diffusers on each aeration grid to accommodate the minimum and maximum flow rate for each zone. If blanks are required for future installation to allow the full range of oxygen requirements the manufacture must provide the extra diffusers and blank diffusers. Spacing of diffuser "blanks" shall be such that uniform aeration and mixing of the basin contents is achieved.
3. For each diffuser blank, furnish diffuser element holder mounted on air distribution header but with PVC or stainless steel plug in place of diffuser.
4. For disk-type diffusers, furnish stainless steel hold down or orifice bolt.
5. The top of diffuser shall be submerged no less than 17 ft below of average side water depth.

B. Air Piping and Supports:
1. Provide air piping including dropleg, manifold, and distribution piping according to the following specifications.
2. Each tank will have four droplegs with minimum diameter of 6 IN, constructed of Type 304L stainless steel. Dropleg shall extend from the manifold to the air header connection as shown on the drawings. The diffuser manufacturer shall provide a flanged connection at top of dropleg and support dropleg from its upper connection. Connect dropleg to manifold with a stainless steel band coupling.
3. Manifold:
   a. Furnish manifolds having the same nominal pipe diameter as the dropleg. Manifold shall be fabricated from unplasticized PVC conforming to ASTM D1784 Schedule 40. Join manifold sections with flanges and gaskets. Fabricate manifolds with 6 IN diameter flanged stub connections to each air distribution header. Provide stainless steel 30 supports for each manifold with a maximum spacing of 8 FT between supports. Design manifold, connections and supports to resist thrust generated by expansion or contraction of the piping system. Ensure supports are adjustable vertically and horizontally for alignment of piping on sloped basin floor.
4. Air distribution piping:
   a. Furnish distribution piping for the required air flow. Distribution piping shall be fabricated from unplasticized PVC conforming to ASTM 3034 and ASTM D3915. Join section of distribution piping with flanges and gaskets. Provide stainless steel supports for each distribution header with a maximum spacing of 7.5 FT between supports. Ensure supports are adjustable vertically and horizontally for field alignment of piping on sloped basin floor.
5. Provide each aeration grid with a drainline and air purge system for removing liquid within the distribution grid. Drain line shall have a minimum diameter of 4 IN. Air purge piping shall have a minimum diameter of 3/4 IN.
6. Furnish pressure monitoring equipment for each aeration grid to measure the dynamic wet pressure across the diffuser elements in each grid. Provide one portable monitoring panel with differential pressure gauge for use on all pressure monitoring connections. Provide a minimum of two pressure monitoring devices for each aeration grid, one of which shall be installed at the furthest diffuser on the grid from the dropleg and one installed at the nearest diffuser to the dropleg.

C. Supports:
1. Manifold supports:
a. Provide manifold supports, of stainless steel, as previously specified.
b. Manifold supports shall include manifold hold downstrap (U-bolt or equal), cross-tree and supporting structure.
2. Distribution piping supports:
a. Provide one fixed anchor support of stainless steel for each distribution header section to prevent longitudinal and rotational movement of the distribution header at the support.
b. Furnish guide supports which allow longitudinal movement of the distribution header to allow for thermal expansion and contraction of the header.
c. Provide a PVC expansion joint between each distribution header section restrained by a fixed anchor support to allow for thermal expansion and contraction of the header between fixed supports.
3. Seismic Requirements:
a. All manifold and distribution piping supports shall be designed to meet the seismic requirements of specification 01900.
b. The manufacture shall ensure that the equipment is installed as designed.
c. Support system drawings and calculations shall be signed and sealed by a licensed Civil or Structural California Engineer and included in the submittal for engineer approval.

2.3 PERFORMANCE AND DESIGN REQUIREMENTS

A. Conditions of Service:
1. Elevation at jobsite: 20 FT.
2. Ambient air temperature: 40 to 90 DegF.
3. Ambient atmospheric pressure: 14.6 psia.
4. Ambient water temperature in Activated Sludge Basin 66 to 80 DegF.

B. Design Criteria:
1. Provide four aeration grids in each of the three aeration tanks capable of aerating and mixing the contents of the aeration basins according to the following criteria:
a. Number of basins: One.
b. Number of Tanks per basin: Three.
c. Tank Length:
1) Tank 1: 96 FT
2) Tank 2: 96 FT
3) Tank 3: 96 FT
d. Tank Width:
1) Tank 1: 40 FT
2) Tank 2: 40 FT
3) Tank 3: 40 FT
e. Average Side water depth:
1) Tank 1: 18 FT
2) Tank 2: 18 FT
3) Tank 3: 18 FT
f. Total working volume (three basins): 1.56 MGD.
g. Minimum diffuser submergence allowed: 17 FT.
h. Oxygen uptake rate (SOR) (total): LB/Day (maximum month).
1) See table below for design oxygen transfer rates for each basin.

DESIGN OXYGEN TRANSFER RATES (PER TANK)

	Oxygen Transfer (lbs/hr)			
Zone Number	Start up	Maximum Month	Maximum Month 1 BF out of service	Maximum Day
1	29.0	34.0	66.2	68.1
2	21.1	24.7	37.8	49.4
3	20.0	23.4	34.4	46.8
4	19.6	23.0	33.2	46.0
Total Oxygen Required	89.6	105.2	171.7	210.3

i. Diameter of droplegs; One dropleg per zone:

MAXIMUM DROPLEG DIAMETER

Zone Number	Diameter (in)
1	8
2	8
3	6
4	6

C. Performance Requirements:
1. Provide equipment capable of transferring not less than the oxygen demand listed in Section 2.3.B.1.h at all design conditions listed in paragraph 2.3 for each activated sludge basin.
2. In addition, provide sufficient number of diffusers to achieve minimum clean water transfer efficiency of 25 percent over the airflow range specified for Startup, Maximum Month, and Maximum Month with 1 BF out of service.
3. Provide a minimum clean water transfer efficiency of 29 percent for the maximum day condition.

D. Headloss Requirements:
1. Design each aeration grid to ensure that the air flow is evenly distributed through each diffuser over the air flow range specified.
2. In addition, design the system such that the headloss at the peak air flow is less than 0.8 psig. The headloss is defined as headloss from top of dropleg through manifold, distribution headers, clean diffusers and orifice to the water diffuser interface for a temperature of 100 DegF.

E. Mixing Requirements:
1. Ensure mixing over the air flow range specified prevents deposition of solids in or near basin corners behind columns, supports and incidental structural components.
2. Ensure no progressive buildup of solids exists or is such that process can be adversely affected.

2.4 SOURCE QUALITY CONTROL

A. Testing:
1. Oxygen transfer test: Submit detailed report of oxygen transfer test results obtained for a similar installation to demonstrate oxygen transfer efficiency for the proposed system.
2. Quality control tests:
a. The quality control tests described below shall be performed by the equipment supplier. Detailed reports on all test results shall be submitted to the engineers for acceptance prior to shipment.

b. Unless otherwise specified, each test shall be performed on a minimum total sample size of 40 diffusers selected at random from the total number of diffusers to be supplied. If diffuser production requires multiple batches, select, at random, an equal number of diffusers from each batch so that the total number of diffusers tested is not less than 40.

c. For each quality control test, 95 percent of the diffusers tested shall comply with the requirements of the test. If more than 5 percent of the test sample fails to meet the requirements of the specific test, then the entire batch of diffusers shall be tested to ensure that 95 percent of all diffusers meet the test requirements.

3. Uniformity testing:

a. Perform a uniformity test to demonstrate an even distribution of air bubbles when the diffusers are submerged. For the number of diffusers selected for the test, submerge the diffusers to a depth of 1 IN of clean tap water. Apply an initial air flow of 2.5 scfm per diffuser for a period of 5 minutes and then reduce the air flow per diffuser in increments of 0.5 scfm for a period of 5 minutes at each air flow rate to a minimum of 0.5 sfm per diffuser. Visually observe and photograph the water surface to assure uniformity of air distribution.

b. The uniformity test shall be conducted with diffusers arranged and spaced in a pattern similar to that proposed for the installation. 95 percent of the diffusers tested shall show a substantially even distribution of air at air flows from 0.5 to 2.0 scfm per diffuser.

4. Strength testing:

a. Diffusers shall be able to withstand a vertical load of 300 in-lbs applied to the edge of the diffuser.

b. All diffuser elements, piping, and supports tested for strength shall not break, crack, or deform from original dimensions when subjected to this load.

2.5 MAINTENANCE MATERIALS

A. Furnish a minimum of the following:

1. One (1) spare air distribution header for each grid.
2. Twenty (20) spare diffusers.
3. Twenty (20) spare plugs for use as diffuser blanks.

PART 3 - EXECUTION

3.1 INSTALLATION

A. For aeration system equipment, assemble in factory to ensure proper fit. Mark parts with erection marks, disassemble for shipment.

B. Install per manufacturer’s instructions and recommendations.

3.2 FIELD QUALITY CONTROL

A. Employ and pay for services of equipment manufacturer's field service representative(s) to:

1. Inspect equipment covered by these Specifications.
2. Supervise adjustments and installation checks.
3. Provide test equipment, tools, and instruments necessary to accomplish equipment testing.
4. Conduct startup of equipment and perform operational checks.
5. Provide District with a written statement that manufacturer's equipment has been installed properly, has been started up, and is ready for operation by District's personnel.

END OF SECTION

HDR Engineering, Inc.

Goleta Sanitary District

Goleta, CA

Goleta Sanitary District Wastewater Treatment Plant Upgrading - Specifications – Final Design

Construction Documents Project Manual

VOLUME 2
Divisions 13 through 16

September 2010

HDR Project No. 87249

VOLUME 2

DIVISION 13 - SPECIAL CONSTRUCTION

13224	CLARIFIER BASINS REHABILITATION
13226	TRICKLING FILTER MEDIA
13228	WASTE GAS BURNER
13322	INSTRUMENTATION AND CONTROL SYSTEM TESTING
13323	INSTRUMENTATION AND CONTROL SYSTEM COMMISSIONING
13440	INSTRUMENTATION FOR PROCESS CONTROL: BASIC REQUIREMENTS
13441	CONTROL LOOP DESCRIPTIONS
13442	PRIMARY ELEMENTS AND TRANSMITTERS
13446	CONTROL AUXILIARIES
13448	CONTROL PANELS AND ENCLOSURES
13449	SURGE PROTECTION DEVICES (SPD) FOR INSTRUMENTATION AND CONTROL EQUIPMENT
13500	PROGRAMMABLE LOGIC CONTROLLER (PLC) CONTROL SYSTEM
13504	CONFIGURATION REQUIREMENTS: HUMAN MACHINE INTERFACE (HMI) AND REPORTS
13510	GENERAL REQUIREMENTS: CONTROL SYSTEMS INTEGRATOR

DIVISION 14 - CONVEYING SYSTEMS

14240	HYDRAULIC ELEVATORS
14550	CONVEYORS: BELT
14551	CONVEYORS: SCREW

DIVISION 15 - MECHANICAL

15060	PIPE AND PIPE FITTINGS: BASIC REQUIREMENTS
15061	PIPE: STEEL
15062	PIPE: DUCTILE
15063	PIPE: COPPER
15064	PIPE: PLASTIC
15066	STAINLESS STEEL PIPE
15090	PIPE SUPPORT SYSTEMS
15100	VALVES: BASIC REQURIEMENTS
15101	GATE VALVES
15102	PLUG VALVES
15103	BUTTERFLY VALVES
15104	BALL VALVES
15105	GLOBE VALVES
15106	CHECK VALVES
15114	MISCELLANEOUS VALVES
15115	WATER CONTROL GATES
15183	PIPE, DUCT AND EQUIPMENT INSULATION
15440	PLUMBING FIXTURES AND EQUIPMENT
15515	HYDRONIC SPECIALTIES
15555	BOILERS
15605	HVAC: EQUIPMENT
15652	REFRIGERANT PIPING SYSTEM
15886	ODOR REDUCTION SYSTEM: BIOLOGICAL
15890	HVAC: DUCTWORK

15970 INSTRUMENTATION AND CONTROL FOR HVAC SYSTEMS
15990 HVAC SYSTEMS: BALANCING AND TESTING

DIVISION 16 - ELECTRICAL

16010 ELECTRICAL: BASIC REQUIREMENTS
16060 GROUNDING
16080 ACCEPTANCE TESTING
16120 WIRE AND CABLE: 600 VOLT AND BELOW
16130 RACEWAYS AND BOXES
16132 CABLE TRAY
16135 ELECTRICAL: EXTERIOR UNDERGROUND
16140 WIRING DEVICES
16220 MOTORS
16230 ENGINE GENERATOR: DIESEL
16265 VARIABLE FREQUENCY DRIVES - LOW VOLTAGE
16275 DISTRIBUTION TRANSFORMERS
16410 SAFETY SWITCHES
16430 SWITCHGEAR
16440 SWITCHBOARDS
16441 PANELBOARDS
16442 MOTOR CONTROL EQUIPMENT
16460 DRY-TYPE TRANSFORMERS
16490 OVERCURRENT AND SHORT CIRCUIT PROTECTIVE DEVICES
16491 LOW VOLTAGE SURGE PROTECTION DEVICES (SPD)
16492 ELECTRICAL METERING DEVICES
16493 CONTROL EQUIPMENT ACCESSORIES
16500 INTERIOR AND EXTERIOR LIGHTING
16711 PASSIVE TELECOMMUNICATION SYSTEM

D I V I S I O N 1 3

SPECIAL CONSTRUCTION

SECTION 13224
CLARIFIER BASINS REHABILITATION

PART 1 - PART 1 GENERAL

1.1 SUMMARY

A. Section Includes: Rehabilitation of existing Primary Sedimentation Tanks (PST) 1, 2 and 3 and Secondary sedimentation tanks (SST) 1, and 2.

B. Related Sections:
1. Section 01340 Submittals
2. Section 03348 Concrete Finishing and Repair of Service Defects
3. Division 5 Metals
4. Section 09905 Paintings and Protective Coatings.
5. Section 11005 Equipment: Basic Requirements
6. Section 11125 Sludge Collectors.
7. Division 16 Electrical.

1.2 GENERAL

A. Existing primary sedimentation tanks 1, 2, and 3 and secondary sedimentation tanks 1 and 2 locations are shown generally on the site plans. Excerpts from the record drawings and EIMCO drawings are shown at the end of this Section for reference.

B. Existing Sedimentation Basin Mechanisms:
1. Sludge collector mechanism manufactured by EIMCO Water Technologies, Salt Lake City, Utah.
2. Installed in 1964, 1971 and 1987.
3. Sales Representative is:
   Bruce Zimmerman
   Coombs-Hopkins Company
   5411 Avenida Encinas, Suite 250
   Carlsbad, California 92008
   Phone 760-931-0555
   FAX 760-931-9715.

1.3 1.03 SUBMITTALS

A. Product Data: Submit information on all new products provided in accordance with Section 01340.

B. Shop Drawings: Submit prior to beginning work described in this Section.
1. Work plan with detailed time schedule for acceptance by the construction manager.
2. Complete electrical and control wiring plan showing all modifications made as part of this Work.
3. Written instructions from sludge collector manufacturers detailing proper procedures for rehabilitation of equipment as specified herein.
4. List equipment and materials that will be reused and which will be provided as new.

C. Samples: None.

D. Quality Control Submittals:
1. Manufacturers written confirmation and acceptance of all proposed changes to existing equipment (except where manufacturer is no longer in business).

E. Contract Closeout:

1. Project Record Documents showing as-built mechanical and electrical drawing, and information on all supplied equipment and parts.
2. Operation and Maintenance Manuals showing complete details with step by step procedures and exploded views for all operation and maintenance requirements including complete overhaul and replacement of all parts.

1.4 QUALITY ASSURANCE

A. All modifications to existing equipment must be approved by equipment manufacturer and construction manager.

1.5 DELIVERY, STORAGE, AND HANDLING -

A. Storage and Protection: Protect equipment at the site in accordance with Section 01600.

1.6 PROJECT CONDITIONS

A. Environmental Requirements: Refer to Section 01560 for disposal of the sand blasted paint and material.

1.7 SEQUENCING AND SCHEDULING

A. Coordinate work as specified in Section 01060.

B. Coordinate work per section 3.1 of this specification.

1.8 ADDITIONAL WORK FOR UNKNOWN CONDITIONS

A. Due to the nature of the work it is expected that additional work maybe required to fully rehabilitate the existing clarifiers onsite. The contractor shall provide an allowance of $100,000 for additional work arising from unknown conditions. All additional work will be directed by the construction manager and will be deducted from the allowance. All of these work items will be mutually agreed upon prior to beginning work.

B. Coordinate work per section 3.1 of this specification.

PART 2 - PRODUCTS

2.1 EQUIPMENT

A. Provide the following replacement parts for all three existing primary clarifiers:
1. Assembly hardware and squeegees.
2. Skimmer wipers, skimmer tension springs, and skimmer collars.

B. Provide all necessary lubricants and oils for proper operation of equipment. Deliver to the jobsite in new unopened containers clearly labeled.

C. Drive assembly will be removed and sent to EIMCO for rehabilitation.

D. Provide scum baffle supports for all three existing primary sedimentation basins and two secondary sedimentation basins as indicated on as built drawings attached to this specification section.

E. Provide new gasket for existing weirs when they are removed for rehabilitation

PART 3 - EXECUTION

3.1 COORDINATION

A. Coordinate with GSD staff and Construction Manager to facilitate drainage of the sedimentation tanks. Drainage of a tank will require 7 days notice and 8 hours for dewatering prior to beginning refurbishment.

B. Only one (1) primary sedimentation tank may be out of service at a time. Primary sedimentation tank refurbishment shall occur after the upgraded secondary treatment process is in operation. Primary sedimentation tank refurbishment shall not occur during the months of December, January, and February due to annual wet weather flow peaks due to rainfall.

C. The secondary sedimentation tanks 1 and 2 may both be taken out of service only after the new sedimentation tanks 3 and 4 are in operation.

3.2 REHABILITATION

A. Sandblast and provide new HPIC SYSTEM #2 - coating system in accordance with Section 09905 for existing primary and secondary sedimentation basins including:
   1. Disassemble and remove all major subcomponents, including cage, center column, and rake arm for sand blasting and coating.
   2. Structural steel and components for sludge collector mechanisms, scum boxes, skimmer arm, scum baffle supports, and submerged piping and supports.
   3. Remove squeegees prior to sandblasting and re-coating and provide new squeegees from original manufacturer.
   4. Protect non-metal components as necessary.
   5. Bridge walkway steel for PST No. 1 2, and 3 and SST No. 1 and 2.
   6. Remove aluminum grating on walkway during sandblasting and recoating operations.
   7. Protect non-metal components as necessary.
   8. After sand blasting of all components the Construction Manager will inspect the steel and coordinate with the contractor on additional repairs out of the construction allowance for the work.

B. Provide HPIC System #36 coating system in accordance with section 09905 for Interior concrete from top of walls down to 4 feet down from weir invert including effluent boxes and effluent launder channel walls and bottom. The contractor should assume replace 50 percent of the scum baffle angle supports for each PST No. 1, 2, and 3 and SST No. 1 and 2 additional replacement will be charged to the rehabilitation allowance through the direction of the construction manager.

C. One support assembly consists of one aluminum L 6x6x0.500x5 inches and one aluminum L 6 x 3.5 x 0.500x5 inches with 1-1/2 inch x 11/16 inch slotted holes with 5/8 inch diameter stainless steel bolts, nut and double washer.

D. Coat aluminum in contact with concrete with HPIC SYSTEM #3 per Section 09905.

E. Assume that every other support assembly will be replaced however; the Construction Manager will identify the support assemblies to be replaced once the basins are drained.

F. Perform function test of all equipment as specified in Section 11125.

G. Repair any walls or other deterioration in concrete surfaces in accordance with Section 03348 for existing primary and secondary clarifier basins.

H. Sandblast and provide new coating systems per Section 09905 to the following:
   1. PST 1, 2, and 3, and SST 1 and 2 external effluent piping, valves and scum piping exposed to view.
   2. Hose racks along the perimeter of all clarifiers. .

I. Replace the existing galvanized nuts and washers used to anchor the catwalk support brackets to the concrete for PST No. 1 and 2.

1. Replace existing nuts and washers at each anchor bolt with one 1/2 inch stainless steel nut and two stainless steel washer (nut assembly).
2. After removing existing galvanized nut and washer, sandblast the anchor bolt exposed to view and coat the bolt with corrosion resistant paint. Color shall match the existing adjacent structural aluminum.

J. Replace existing electrical conduit support brackets (assume a total of 60 brackets per clarifier).

K. Remove existing caulking and bondbreaker between the FRP V-notch weirs and concrete wall for entire perimeter of all three existing PSTs

L. Remove the weirs and weir supports on the and two SSTs.

M. Sandblast the entire groove and replace with bond breaker tape and caulk with synthetic rubber sealing compound.

N. Refurbish Primary Clarifier Nos. 1, 2, and 3 clarifier mechanism and Secondary Clarifier Nos. 1, and 2 clarifier mechanisms as follows.
1. Rebuild the drive units including a new torque overload control and new strip liners, bearing, lip seals, and gaskets.
2. New motor package with chain, chain guard and sprocket.

O. The CONTRACTOR shall replace the Scum Scrapper components with new.
1. Include as a minimum the neoprene wipers, the Stainless steel springs, the Aluminum arms, cast steel stop collars, aluminum blade, aluminum bar clamps, steel skimmer support, steel hinged skimmer, stainless steel assembly hardware and other appurtenances required to refurbish the skimmer.

P. Sludge Header Seals and Squeegees: Existing Secondary Clarifiers:
1. Contractor shall replace the Neoprene seals and S.S. Clamping hardware at the Sludge Manifold to the Center Column and Manifold to the embedded Steel Ring.
2. Contractor shall replace the Neoprene Squeegee and 316 Stainless Steel Hardware on the Sludge Headers.

Q. Replace any exposed water lines and electrical conduit which may have deteriorated under direction of the construction manager.

3.3 INSTALLATION

A. Install replacement parts for sludge collector mechanisms in accordance with manufacturer recommendations.

3.4 FIELD QUALITY CONTROL

A. Inspect installation in accordance with Section 11125.

B. Have authorized manufacturers representative of sludge collector equipment certify installation is correct and ready for operation. Minimum two days for each clarifier.

C. Test electrical connections and wiring as specified in DIVISIONS 13 and 16.

D. Torque Test - Primary and Secondary Clarifiers:
1. The clarifier mechanism shall be field torque tested. The purpose of the torque test is to verify the structural integrity of the mechanism's structural steel design and center drive unit. The testing shall be carried out under the supervision of the equipment manufacturer's representative and as approved by the Engineer before the mechanisms are accepted and placed into operation.
2. The torque test shall consist of securing the rake arms by cables to anchor bolts installed by the CONTRACTOR in the tank floor at locations specified by the equipment manufacturer. A load shall be applied gradually to the scraper arm by means of a ratchet lever and cylinder connected to the cable assembly.

3. The magnitude of the applied load shall be measured by calculating the torque from the distance of the line of action of each cable to the centerline of the mechanism. A reading shall be taken at the 100 percent value of the drive design torque.
4. The manufacturer's service representative shall verify that the alarm, motor cut-out, and backup safety motor cut-out switches are properly set and are in proper operation to protect the clarifier mechanism as specified.

3.5 WARRANTY

A. The manufacturer shall provide a one year warranty for each rebuilt drive unit from the date that the clarifier is put back in operation..

END OF SECTION

NOTES:

1. ASTERISK (*) DENOTES VARIANCE FROM CONTRACT DOCUMENTS AND SHOULD BE PARTICULARLY NOTED.
2. THE FOLLOWING DEFINES THE RESPONSIBILITY OF THE EIMCO PMD OF ENVIROTECH CORPORATION (EIMCO), WITH REGARD TO THE INFORMATION AND DIMENSIONS SHOWN ON THIS DRAWING. (A) DIMENSIONS, LOADS, AND OTHER INFORMATION ARE PROVIDED TO ACCOMMODATE THE EQUIPMENT TO THE STRUCTURE AS SHOWN. (B) THE CUSTOMER IS TO PROVIDE REINFORCING STEEL AND DESIGN FOR CONCRETE STRUCTURES AND IS TO DETERMINE SIZES TO SUIT LOCAL CONDITIONS. (C) THIS DRAWING IS NOT TO BE USED FOR CONSTRUCTION OR INSTALLATION PURPOSES UNLESS IT BEARS THE APPROVAL OF THE OWNER, THE ENGINEER OR THEIR AUTHORIZED REPRESENTATIVE. (D) THE MECHANISM SHOWN IS DESIGNED FOR DIRECTION OF ROTATION AS INDICATED. EIMCO DOES NOT ASSUME RESPONSIBILITY FOR DAMAGE IF OPERATED IN THE OPPOSITE DIRECTION. (E) CHARGES FOR MODIFICATIONS, ADDITIONS OR CORRECTIONS TO THE EQUIPMENT WILL NOT BE ACCEPTED BY EIMCO UNLESS PRIOR APPROVAL IS OBTAINED IN WRITING FROM AN AUTHORIZED EIMCO REPRESENTATIVE.
3. EIMCO DOES NOT FURNISH ELECTRICAL WIRING, CONDUIT OR ELECTRICAL EQUIPMENT, PIPING, VALVES OR FITTINGS; LUBRICATING OIL OR GREASE; FIELD PAINTING; FIELD WELDING OR ERECTION. (EXCEPT AS SPECIFICALLY NOTED).
4. SHOP PRIMER PAINT IS INTENDED TO SERVE ONLY AS A BONDING COAT BETWEEN METAL SURFACE AND PROTECTIVE FINISH OR SEALING COATS. AS SUCH IT AFFORDS THE METAL ONLY MINIMAL PROTECTION AGAINST THE ELEMENTS. EIMCO CANNOT BE RESPONSIBLE FOR DETERIORATION OF SHOP-PRIMED EQUIPMENT DURING TRANSIT, JOB STORAGE OR OTHER EXPOSURE TO THE ELEMENTS PRIOR TO APPLICATION OF FINISH COAT(S).
5. SURFACE PREPARATION TO CONSIST OF NONE
6. SHOP PAINTING TO CONSIST OF NONE
7. FOR ADDITIONAL DETAILS, REFER TO DRAWINGS:
   - 23517A335 - GEARMOTOR
   - 23496C4 - SCUM SCRAPER ASSEMBLY

E-2405 Rev. 8/77

8. EIMCO TO FURNISH MODIFICATIONS FOR (1) EXISTING EIMCO UNIT AS SHOWN & NOTED.
9. ALL PLATES & STRUCTURAL MEMBERS SHALL HAVE A MINIMUM THICKNESS OF 1/4" U.N.
10. ANCHORS & ASS'Y BOLTS TO BE 316 S.S. U.N.
11. MODIFICATIONS TO GUARD AND GEARMOTOR MOUNTING BASE ARE NOT BY EIMCO.

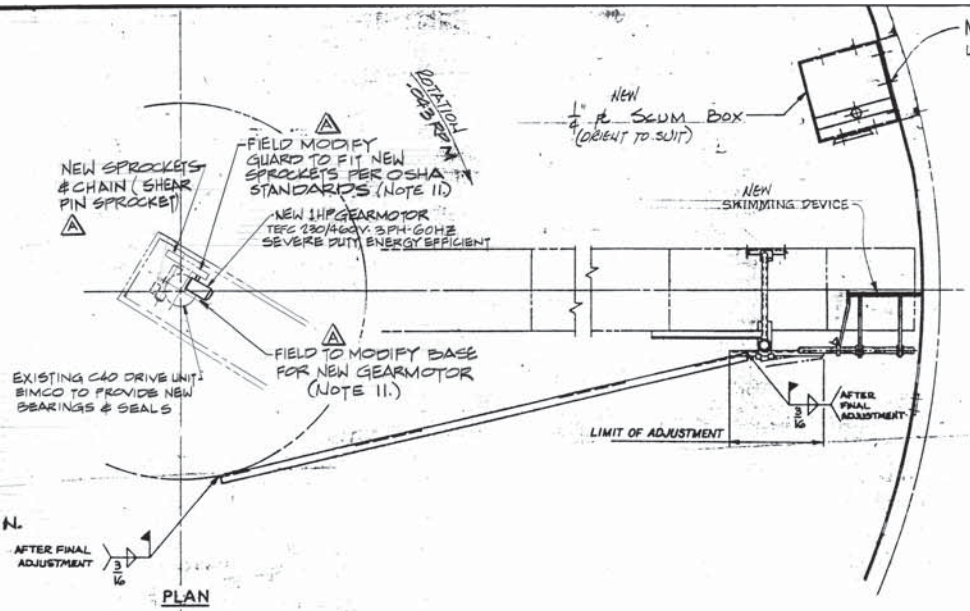

PLAN

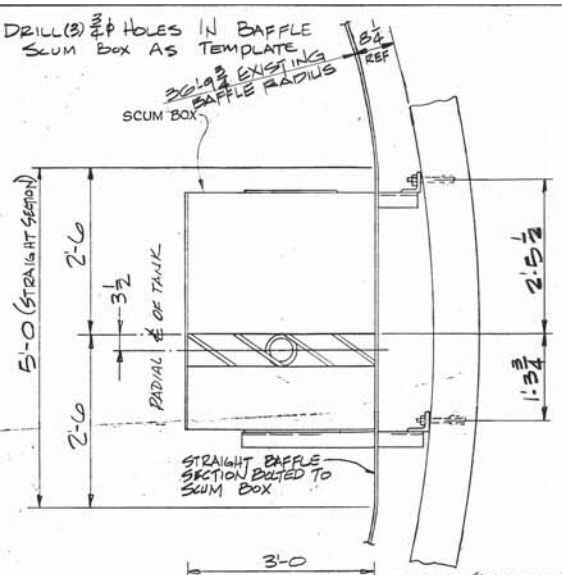

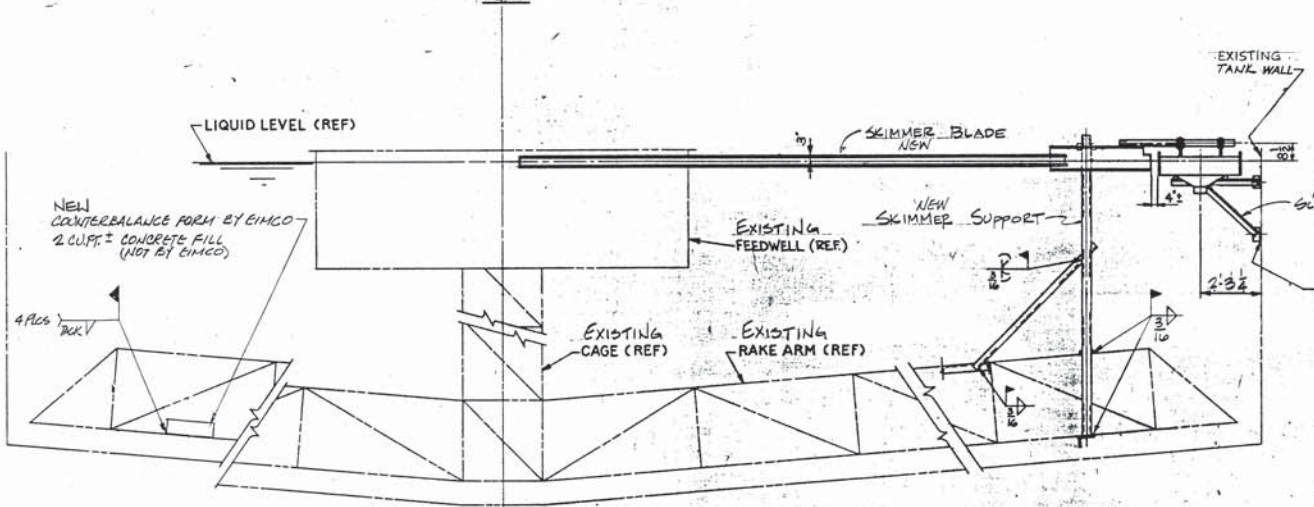

ELEVATION

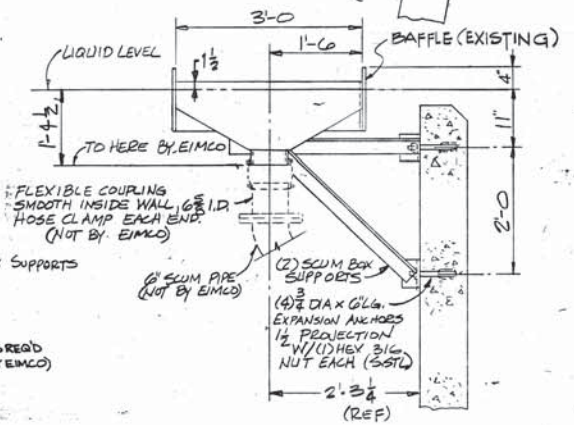

SCUM BOX DETAIL
(W/SUGGESTED SCUM PIPE)

THIS DRAWING IS CERTIFIED FOR

CUSTOMER KIEWIT PACIFIC
CUSTOMER ORDER NUMBER 3301-M6
EIMCO ORDER NUMBER 23517-03
PROJECT GOLETA, CA W.T.F. UPGRADING PROJECT
PROJECT LOCATION GOLETA, CA
CONSULTING ENGINEER BROWN & CALDWELL
BY Bob Hampel DATE 4-2-87

EXISTING # 2699-A

EIMCO PMD, ENVIROTECH CORPORATION

ENVIROTECH — EIMCO BSP DIVISION — ENVIROTECH CORPORATION — Salt Lake City, Utah

This drawing and all information thereon is the property of Eimco BSP and is confidential and must not be made public or copied. This drawing is loaned subject to return upon demand and is not to be used directly or indirectly in any way detrimental to our interests.

HOLD FRACTIONAL MACHINED DIMENSIONS TO ± 1/64"

DO NOT SCALE PRINTS

DATE	3-9-87	
DRAWN	SUBERT	
CHECKED	BS	
APPR.	B.H.	

SKIMMING MECHANISM
GENERAL ARRANGEMENT
75'-0 ϕ CLARIFIER MODIFICATION

TSU

DWG. NO. 23517D301 REV. A

REVISION	BY	CHECKED	DATE
REVISED PER CUSTOMER COMMENTS	SUBERT	B.H.	7-27-87

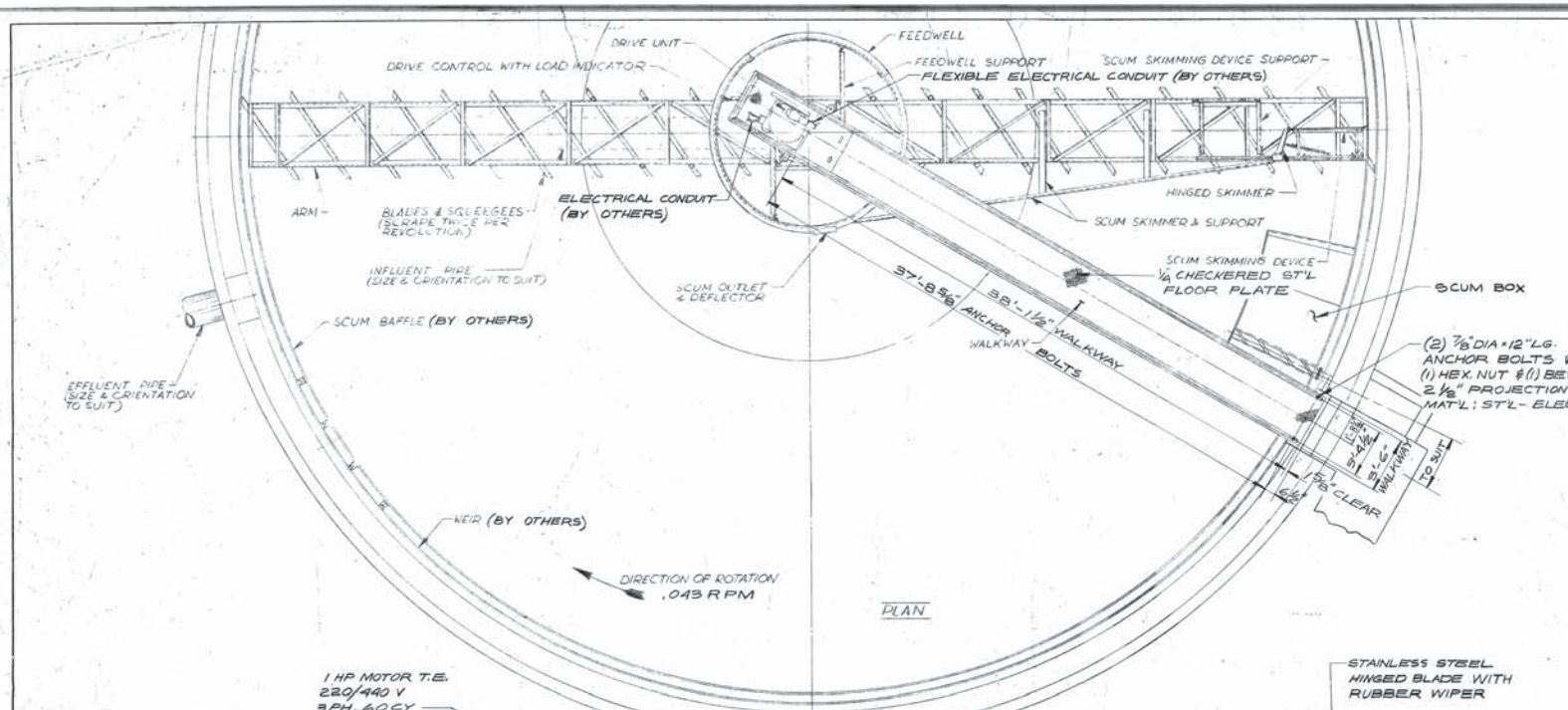

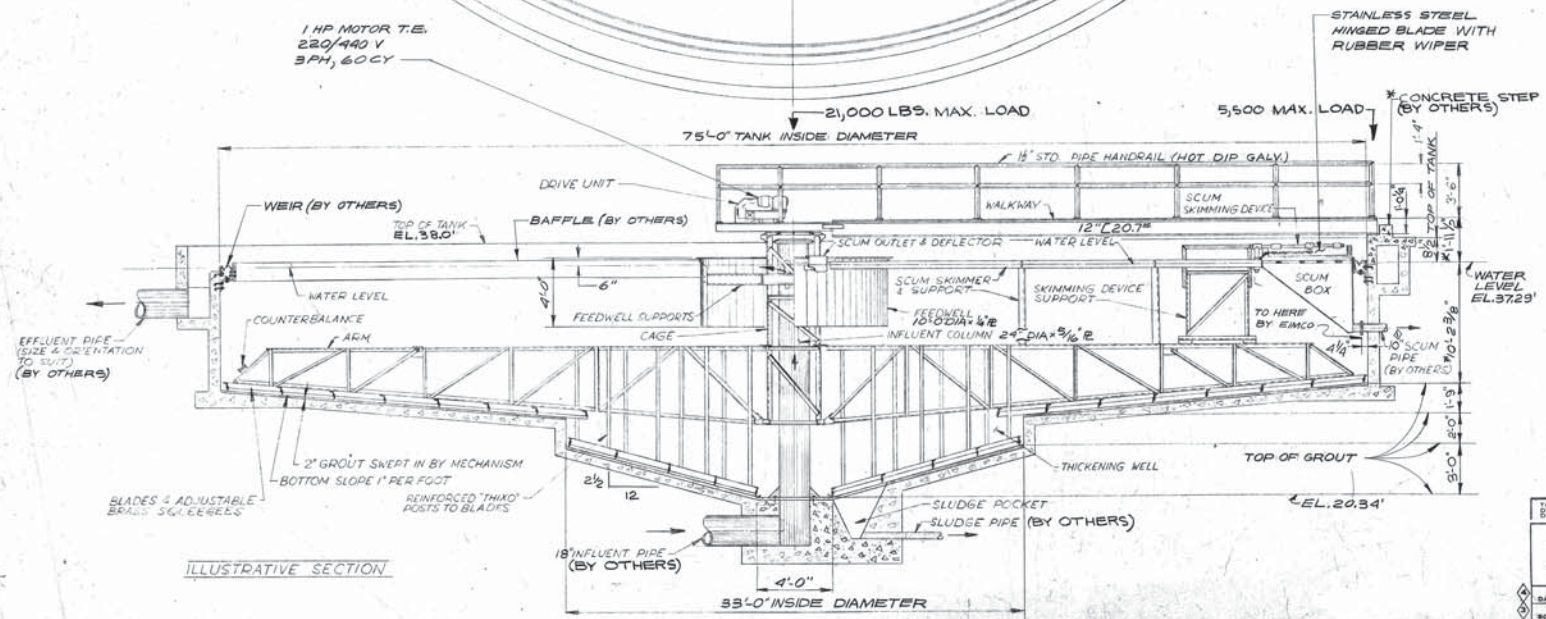

NOTES.

1. ASTERISK (*) DENOTES VARIANCE FROM ORIGINAL DOCUMENTS AND SHOULD BE PARTICULARLY NOTED.
2. THE FOLLOWING DEFINES THE RESPONSIBILITY OF THE EIMCO CORPORATION, PROCESS ENGINEERS DIVISION, WITH REGARD TO THE INFORMATION AND DIMENSIONS SHOWN ON THIS DRAWING. (A) DIMENSIONS, LOADS, AND OTHER INFORMATION ARE PROVIDED TO ACCOMMODATE THE MECHANISM FOR THE TANK AS SHOWN. (B) EIMCO IS NOT RESPONSIBLE FOR CONCRETE DESIGN, AND THE CUSTOMER IS TO PROVIDE REINFORCING STEEL AND DETERMINE SIZES TO SUIT LOCAL CONDITIONS. (C) THIS DRAWING IS NOT TO BE USED FOR CONSTRUCTION OR INSTALLATION PURPOSES UNLESS IT BEARS THE APPROVAL OF THE OWNER, THE ENGINEER OR THEIR AUTHORIZED REPRESENTATIVE. (D) THE MECHANISM SHOWN IS DESIGNED FOR DIRECTION OF ROTATION AS INDICATED. EIMCO DOES NOT ASSUME RESPONSIBILITY FOR DAMAGE IF OPERATED IN OPPOSITE DIRECTION.
3. EIMCO DOES NOT FURNISH ELECTRICAL WIRING, CONDUIT, PIPING OR MECHANICAL EQUIPMENT (EXCEPT AS SPECIFICALLY NOTED), LUBRICATING OIL OR GREASE, FIELD PAINTING OR ERECTION WEIR, WEIR ANCHORS, BAFFLE, BAFFLE ANCHOR, OR BAFFLE CLIPS.
4. SHOP PAINTING TO CONSIST OF: ONE COAT INERTOL #621 PRIMER ON ALL FABRICATED STEEL.
5. FOR ADDITIONAL DETAILS, REFER TO DRAWINGS:
   TANK BOTTOM DETAIL 26949
   DRIVE CONTROL WIRING DIAGRAM T-41612
   SCUM BOX ARRANGEMENT T-41596
6. PUNCHED AND SHEARED EDGES AND ALL ROUGH WELDS WILL BE GROUND.
7. ANCHOR BOLTS AND ASSEMBLY BOLTS WILL BE ELECTRO GALVANIZED

REVISION	BY	DATE	NO.
10" SCUM PIPE WAS 6" SCUM PIPE	JEC	1-26-65	1

THIS DRAWING AND ALL INFORMATION THEREON IS THE PROPERTY OF PROCESS ENGINEERS, INC. AND IS CONFIDENTIAL AND MUST NOT BE MADE PUBLIC OR COPIED. THIS DRAWING IS LOANED SUBJECT TO RETURN ON DEMAND AND IS NOT TO BE USED DIRECTLY OR INDIRECTLY IN ANY WAY DETRIMENTAL TO OUR INTERESTS.

NEW YORK CHICAGO PITTSBURGH

PROCESS ENGINEERS, INC.
SUBSIDIARY OF THE EIMCO CORPORATION (M)
SAN MATEO, CALIFORNIA
ENGINEERING DEPARTMENT

SALT LAKE BIRMINGHAM DULUTH

DATE	11-27-64	SUBJECT	PROCESS CLARI-THICKENER
SCALE	NONE	SIZE	75'-0" DIA × 10'-2 3/8" SWD TYPE CT
DR'WN	JM		
CH'K'D	Hans		GENERAL ARRANGEMENT
APP'D	NFF		

ORDER NO. 2693-A
DATE ISSUED
DWG. NO. 103317

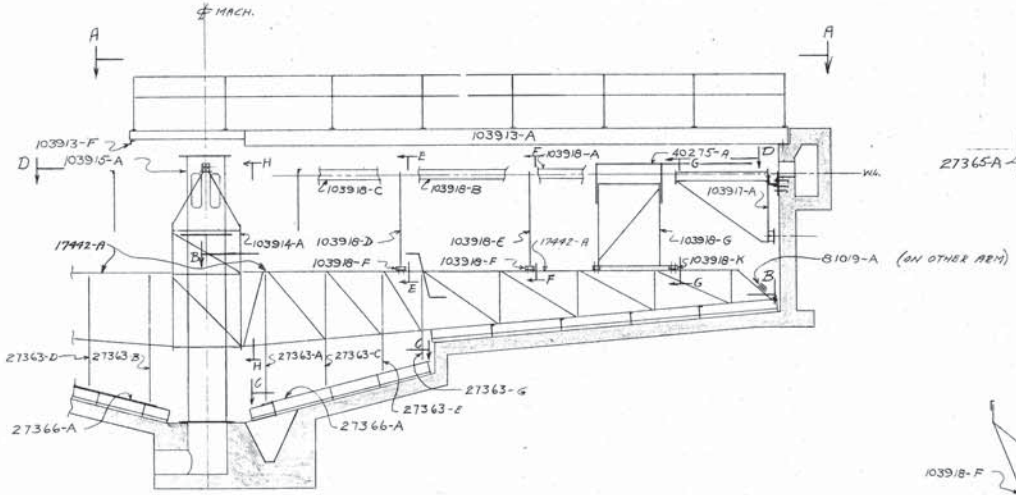

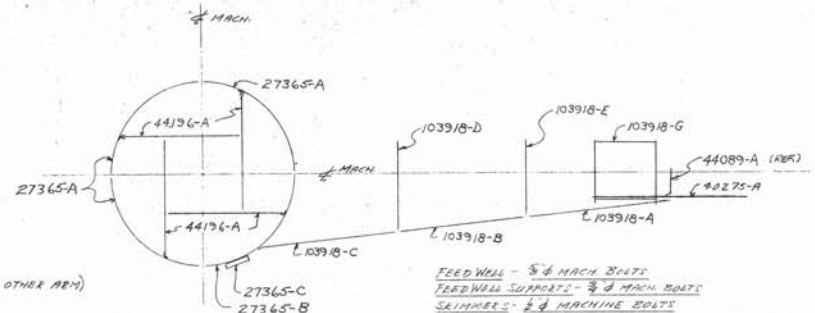

FEED WELL - ⅞" ϕ MACH. BOLTS
FEED WELL SUPPORTS - ⅞" ϕ MACH. BOLTS
SKIMMERS - ½" ϕ MACHINE BOLTS
SKIMMER SUPPORTS - ⅞" ϕ MACH. BOLTS
SKIMMING DEVICE SUPPORT - ⅞" ϕ MACH. BOLTS

SECT. D-D

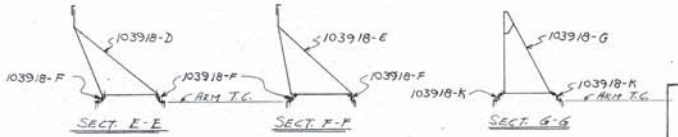

SECT. E-E SECT. F-F SECT. G-G

NOTICE

READ WRITTEN ERECTION INSTRUCTIONS BEFORE ERECTING THIS EQUIPMENT

SEE DWG. 20359 FOR SCUM SCRAPER ASSEMBLY.

VIEW A-A WALKWAY & HANDRAIL
⅞" ϕ MACH. BOLTS

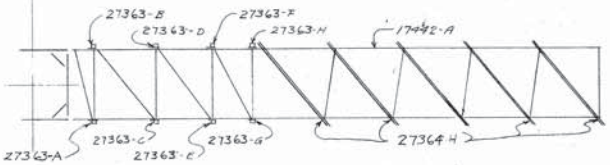

SECT. B-B
THIXO POSTS ⅞" ϕ MACH. BOLTS
SQUEEGEES ⅞" ϕ MACH. BOLTS

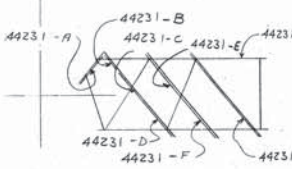

SECT. C-C
SQUEEGEES ⅞" ϕ MACH. BOLTS

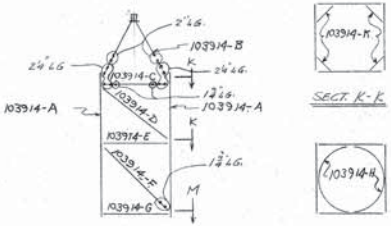

VIEW H-H
CAGE FRAMING - ⅞" ϕ H.S. BOLTS

SECT. K-K ⅞" ϕ H.S. BOLTS x 1¾"LG.

SECT. M-M ⅞" ϕ H.S. BOLTS x 2½"LG.

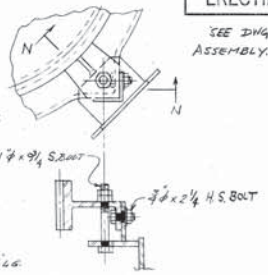

SECT. N-N
CAGE TAKE-UP

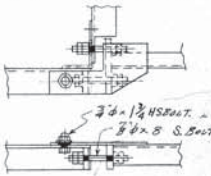

ARM TAKE-UP CONN. (T.C.)

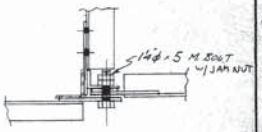

ARM PIVOT CONN. (B.C.)

NOTE:

High strength bolts with hardened steel washers are provided for field bolting the structural connections of this machine. H.S. bolts are identified by marking on the top of the head with three (3) radial lines.

As with rivets these bolts depend on clamping action to develop the full strength of the connection. A torque wrench should be used to provide the bolt tension necessary, as indicated in the table below.

Bolt Size	Recommended bolt tension for calibration wrenches	Req'd minimum bolt tension	Approx. torque req'd to give minimum bolt tension
½"	12,500 lb.	10,850 lb.	90 lb.-ft.
⅝"	20,000	17,250	180
¾"	29,000	25,600	320
⅞"	37,000	32,400	470
1"	49,000	42,500	710
1⅛"	58,000	50,800	960
1¼"	74,000	64,500	1350

REVISION	BY	DATE	No.

THIS DRAWING AND ALL INFORMATION THEREON IS THE PROPERTY OF PROCESS ENGINEERS, INC. AND IS CONFIDENTIAL AND MUST NOT BE MADE PUBLIC OR COPIED. THIS DRAWING IS LOANED SUBJECT TO RETURN UPON DEMAND AND IS NOT TO BE USED DIRECTLY OR INDIRECTLY IN ANY WAY DETRIMENTAL TO OUR INTERESTS.

NEW YORK CHICAGO PITTSBURGH

PROCESS ENGINEERS, INC.
SUBSIDIARY OF THE EIMCO CORPORATION
SAN MATEO, CALIFORNIA
ENGINEERING DEPARTMENT

SALT LAKE BIRMINGHAM DULUTH

DATE	12-21-61 / 2-8-65	SUBJECT	CLARI-THICKENER
SCALE	1/8"=1'-0"	SIZE 75' DIA x 10'-2 3/16" SWD TYPE CT	
DR'WN	dEC		
CH'K'D	⊕	ERECTION DIAGRAM	
APP'D	SCH		

ORDER NO. 2659-A
DATE ISSUED
DWG. NO. 103916

NOTES:

1. ASTERISK (*) DENOTES VARIANCE FROM CONTRACT DOCUMENTS AND SHOULD BE PARTICULARLY NOTED.
2. THE FOLLOWING DEFINES THE RESPONSIBILITY OF THE EIMCO PMD OF ENVIROTECH CORPORATION (EIMCO), WITH REGARD TO THE INFORMATION AND DIMENSIONS SHOWN ON THIS DRAWING. (A) DIMENSIONS, LOADS, AND OTHER INFORMATION ARE PROVIDED TO ACCOMMODATE THE EQUIPMENT TO THE STRUCTURE AS SHOWN. (B) THE CUSTOMER IS TO PROVIDE REINFORCING STEEL AND DESIGN FOR CONCRETE STRUCTURES AND IS TO DETERMINE SIZES TO SUIT LOCAL CONDITIONS. (C) THIS DRAWING IS NOT TO BE USED FOR CONSTRUCTION OR INSTALLATION PURPOSES UNLESS IT BEARS THE APPROVAL OF THE OWNER, THE ENGINEER OR THEIR AUTHORIZED REPRESENTATIVE. (D) THE MECHANISM SHOWN IS DESIGNED FOR DIRECTION OF ROTATION AS INDICATED. EIMCO DOES NOT ASSUME RESPONSIBILITY FOR DAMAGE IF OPERATED IN THE OPPOSITE DIRECTION. (E) CHARGES FOR MODIFICATIONS, ADDITIONS OR CORRECTIONS TO THE EQUIPMENT WILL NOT BE ACCEPTED BY EIMCO UNLESS PRIOR APPROVAL IS OBTAINED IN WRITING FROM AN AUTHORIZED EIMCO REPRESENTATIVE.
3. EIMCO DOES NOT FURNISH ELECTRICAL WIRING, CONDUIT OR ELECTRICAL EQUIPMENT, PIPING, VALVES OR FITTINGS, LUBRICATING OIL OR GREASE, FIELD PAINTING, FIELD WELDING OR ERECTION. (EXCEPT AS SPECIFICALLY NOTED).
4. SHOP PRIMER PAINT IS INTENDED TO SERVE ONLY AS A BONDING COAT BETWEEN METAL SURFACE AND PROTECTIVE FINISH OR SEALING COATS. AS SUCH IT AFFORDS THE METAL ONLY MINIMAL PROTECTION AGAINST THE ELEMENTS. EIMCO CANNOT BE RESPONSIBLE FOR DETERIORATION OF SHOP-PRIMED EQUIPMENT DURING TRANSIT, JOB STORAGE OR OTHER EXPOSURE TO THE ELEMENTS PRIOR TO APPLICATION OF FINISH COAT(S).
5. SURFACE PREPARATION TO CONSIST OF: DRIVE - POWER WIRE BRUSH (SP-3) ALL STEEL - NONE
6. SHOP PAINTING TO CONSIST OF: DRIVE - ONE SHOP COAT TNEMEC 37-77 PRIMER ALL STEEL - NONE
7. FOR ADDITIONAL DETAILS, REFER TO DRAWINGS:
   - 235170201 - DRIVE GENERAL ARRANGEMENT
   - " C103 - DRIVE CONTROL
   - " A133 - GEARMOTOR
   - 234560-4 - SCUM SCRAPER ASSEMBLY
   - 235125 - MOTOR DRIVE WIRING DIAGRAM
   - 235125 - C30LT CAGE CONNECTION
   - A 235170204 - CAGE & COLUMN MODIFICATION.

E-2602 Rev. 8/77

8. EIMCO TO FURNISH MODIFICATION FOR 2 EXISTING CORR-OLIVER UNITS AS SHOWN & NOTED.
9. ALL PLATES & STRUCTURAL MEMBERS SHALL HAVE A MINIMUM THICKNESS OF 1/4" UNLESS NOTED.
10. ANCHORS & ASS'Y BOLTS TO BE 316 S.S. U.N.

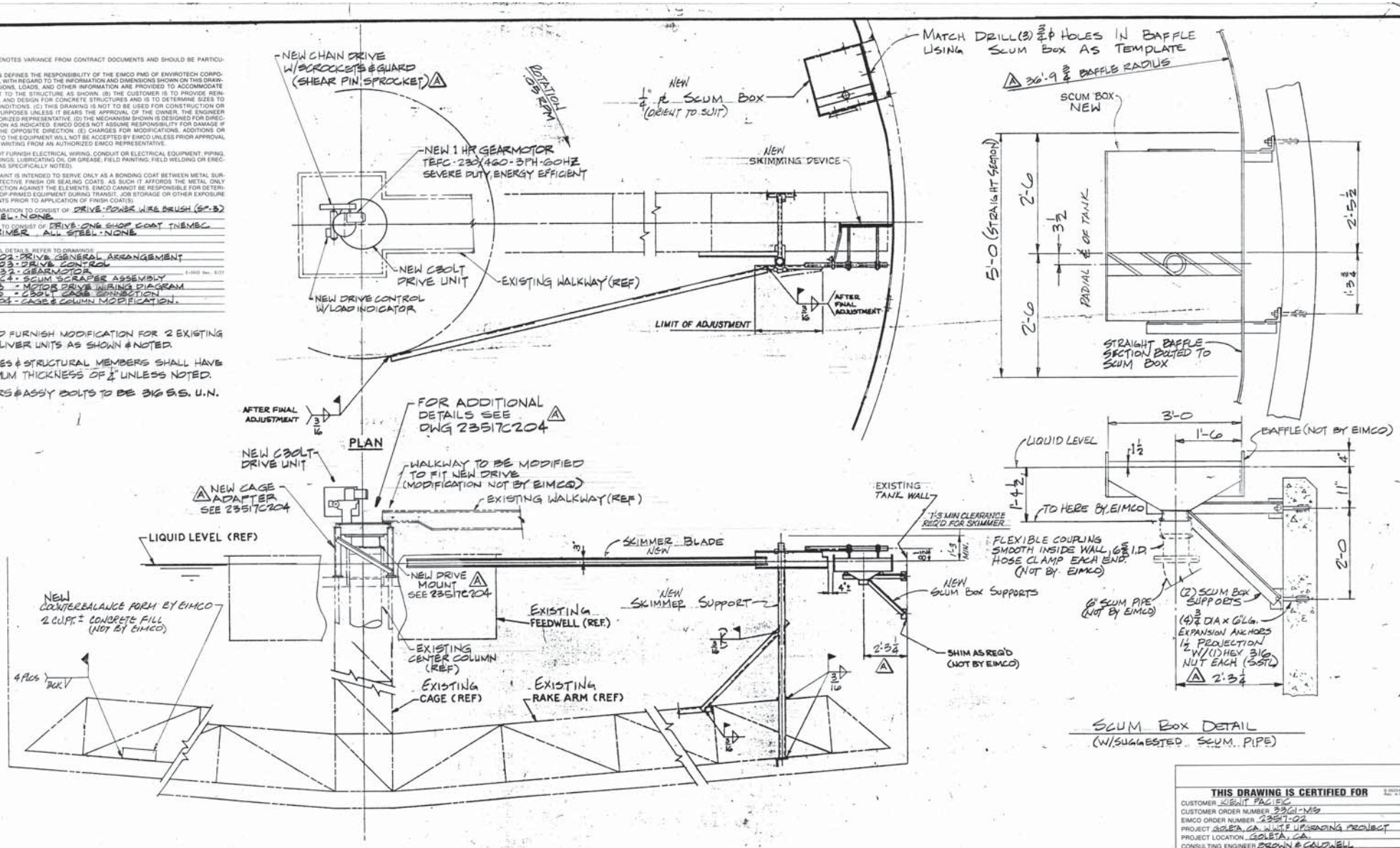

THIS DRAWING IS CERTIFIED FOR

CUSTOMER SIENIT PACISC
CUSTOMER ORDER NUMBER 23361-NIS
EIMCO ORDER NUMBER 23517-02
PROJECT GOLETA, CA. W.W.T.F. UPGRADING PROJECT
PROJECT LOCATION GOLETA, CA.
CONSULTING ENGINEER BROWN & CALDWELL
BY Bob Hammond DATE 4-2-87

EIMCO PMD, ENVIROTECH CORPORATION

ENVIROTECH — EIMCO BSP DIVISION – ENVIROTECH CORPORATION – Salt Lake City, Utah

This drawing and all information thereon is the property of Eimco BSP and is confidential and must not be made public or copied. This drawing is loaned subject to return upon demand and is not to be used directly or indirectly in any way detrimental to our interests.

HOLD FRACTIONAL MACHINED DIMENSIONS TO ± 1/64"

DO NOT SCALE PRINTS

DATE	3-18-87	
DRAWN	GILBERT	
CHECKED	BS	
APPR.	B.H.	

SKIMMING MECHANISM GENERAL ARRANGEMENT 75'-0 & CLARIFIER MODIFICATION

TSU

DWG. NO. 235170201 REV. A

REVISION	BY	CHECKED	DATE
REVISED PER CUSTOMER COMMENTS	GILBERT	B.H.	7-10-87

E-2602A, Rev. 8/75

DRAWING NO. 04013066

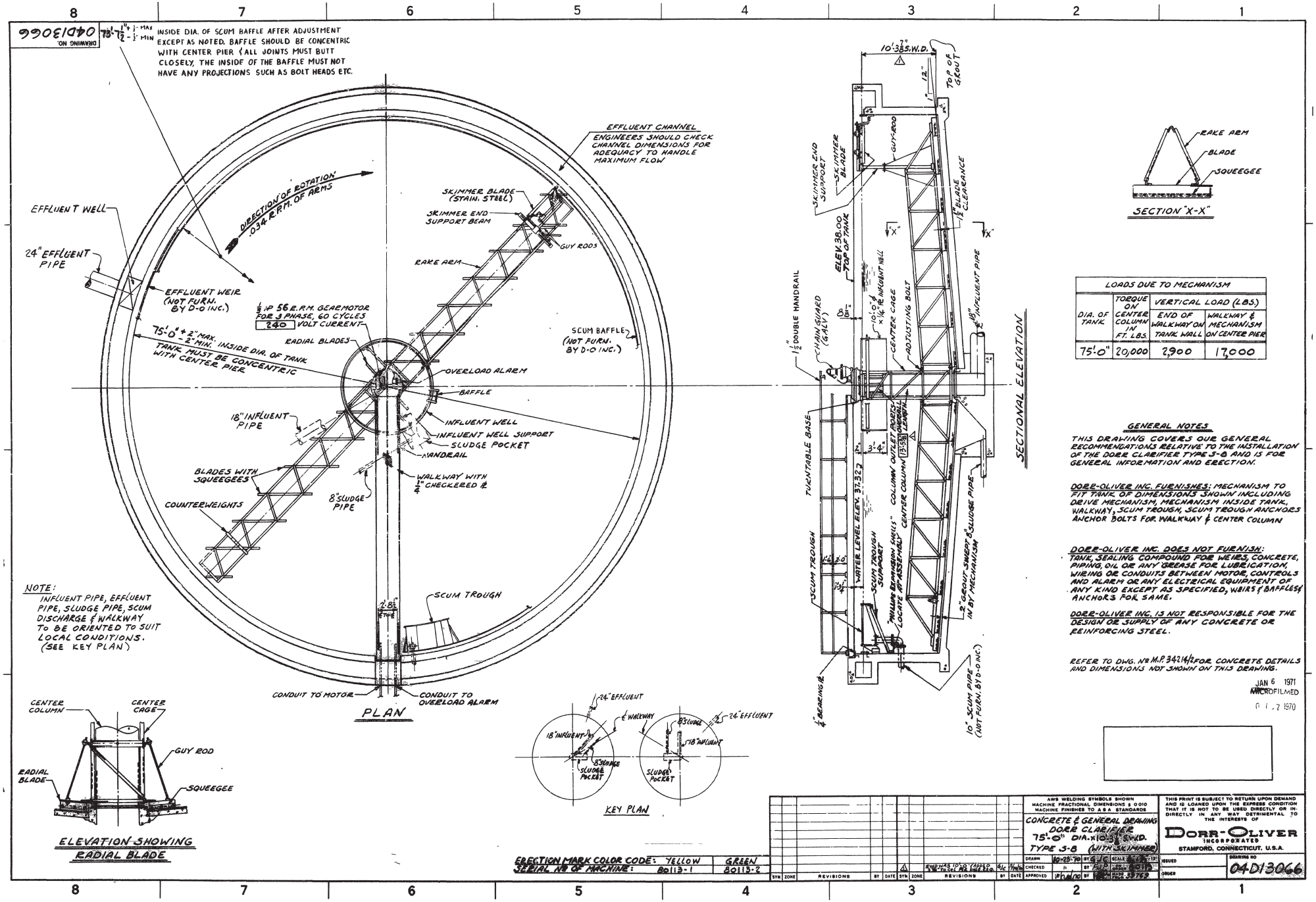

LOADS DUE TO MECHANISM			
DIA. OF TANK	TORQUE ON CENTER COLUMN IN FT. LBS.	VERTICAL LOAD (LBS.)	
		END OF WALKWAY ON TANK WALL	WALKWAY & MECHANISM ON CENTER PIER
75'-0"	20,000	2,900	17,000

GENERAL NOTES

THIS DRAWING COVERS OUR GENERAL RECOMMENDATIONS RELATIVE TO THE INSTALLATION OF THE DORR CLARIFIER TYPE S-8 AND IS FOR GENERAL INFORMATION AND ERECTION.

DORR-OLIVER INC. FURNISHES: MECHANISM TO FIT TANK OF DIMENSIONS SHOWN INCLUDING DRIVE MECHANISM, MECHANISM INSIDE TANK, WALKWAY, SCUM TROUGH, SCUM TROUGH ANCHORS ANCHOR BOLTS FOR WALKWAY & CENTER COLUMN

DORR-OLIVER INC. DOES NOT FURNISH: TANK, SEALING COMPOUND FOR WEIRS, CONCRETE, PIPING, OIL OR ANY GREASE FOR LUBRICATION, WIRING OR CONDUITS BETWEEN MOTOR, CONTROLS AND ALARM OR ANY ELECTRICAL EQUIPMENT OF ANY KIND EXCEPT AS SPECIFIED, WEIRS & BAFFLES & ANCHORS FOR SAME.

DORR-OLIVER INC. IS NOT RESPONSIBLE FOR THE DESIGN OR SUPPLY OF ANY CONCRETE OR REINFORCING STEEL.

REFER TO DWG. No M.P. 34214/2 FOR CONCRETE DETAILS AND DIMENSIONS NOT SHOWN ON THIS DRAWING.

JAN 6 1971
MICROFILMED
0 1 7 1970

ERECTION MARK COLOR CODE: YELLOW GREEN
SERIAL No OF MACHINE: 80113-1 80113-2

SYM	ZONE	REVISIONS	BY	DATE	SYM	ZONE	REVISIONS	BY	DATE

AWS WELDING SYMBOLS SHOWN
MACHINE FRACTIONAL DIMENSIONS ± 0.010
MACHINE FINISHES TO A S A STANDARDS

CONCRETE & GENERAL DRAWING
DORR CLARIFIER
75'-0" DIA. x 10'-3 7/8" S.W.D.
TYPE S-8 (WITH SKIMMER)

DRAWN	10-23-70	BY	
CHECKED		BY	
APPROVED		BY	

SCALE 1/8" = 1'-0"

THIS PRINT IS SUBJECT TO RETURN UPON DEMAND AND IS LOANED UPON THE EXPRESS CONDITION THAT IT IS NOT TO BE USED DIRECTLY OR INDIRECTLY IN ANY WAY DETRIMENTAL TO THE INTERESTS OF

DORR-OLIVER
INCORPORATED
STAMFORD, CONNECTICUT, U.S.A.

ISSUED
ORDER
DRAWING NO 04013066

PIECE MARK	NO. REQ'D	MATERIAL	DESCRIPTION	REMARKS	TOTAL WEIGHT

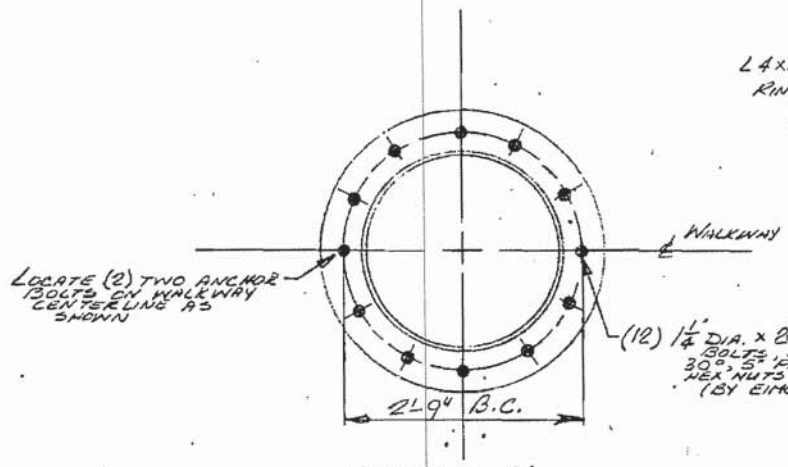

SECTION A-A

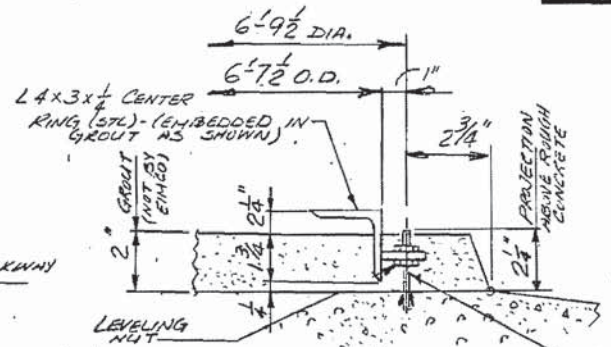

DETAIL B
(CENTER RING DETAIL)

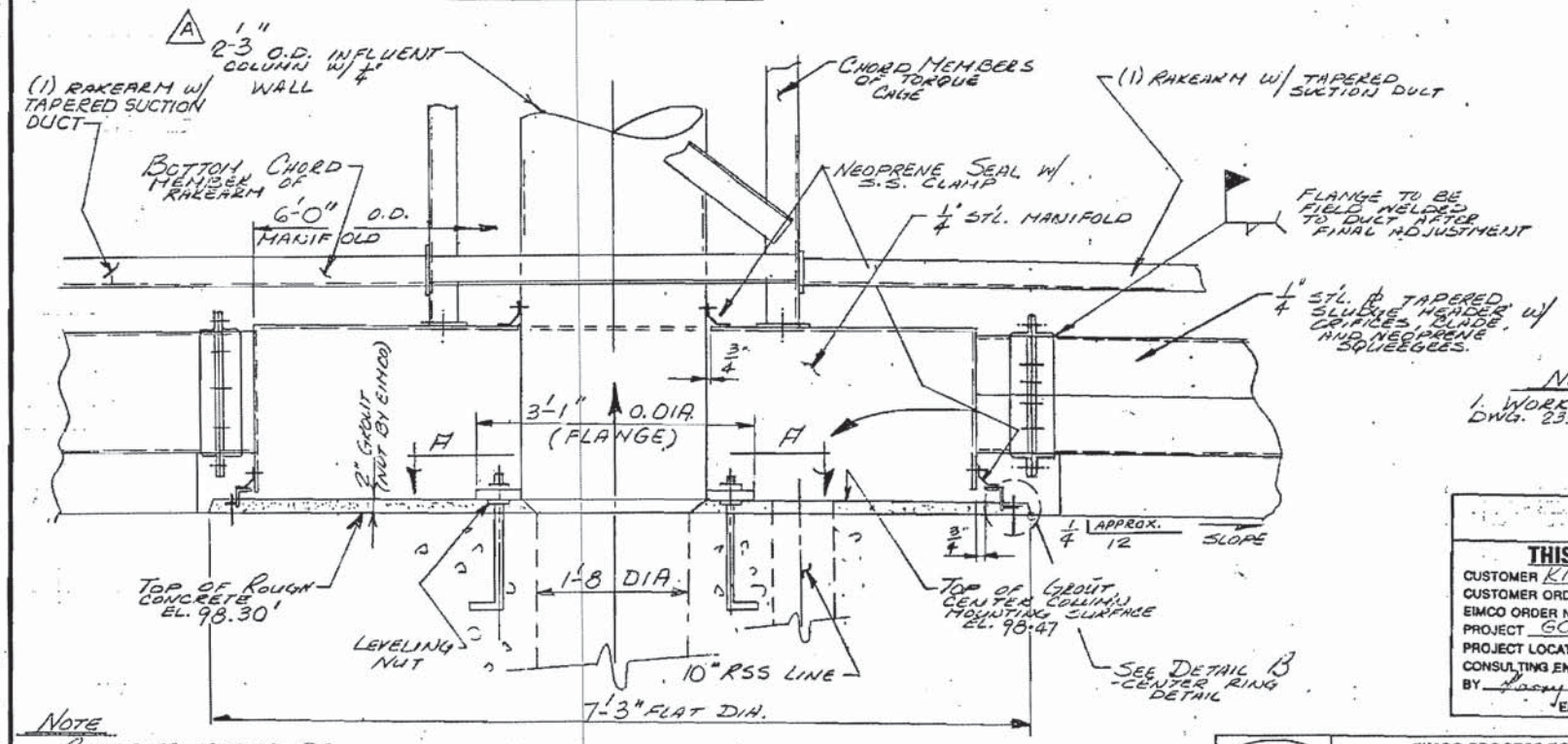

NOTE:
1. WORK WITH GENERAL ARRANGEMENT DWG. 2351701

NOTE
CONCRETE SHOULD BE DESIGNED FOR A MAXIMUM TORQUE LOAD OF 36,400 FT-lbs.

MANIFOLD, SLUDGE HEADER & INFL. COLUMN DETAIL

THIS DRAWING IS CERTIFIED FOR E-2670A Rev. 9/82

CUSTOMER KIEWIT PACIFIC
CUSTOMER ORDER NUMBER
EIMCO ORDER NUMBER 23517-01
PROJECT GOLETA WWTP
PROJECT LOCATION GOLETA-CA.
CONSULTING ENGINEER BROWN AND CALDWELL
BY Harry Hill DATE 3-19-87
EIMCO PROCESS EQUIPMENT COMPANY

2328BC3

EIMCO PROCESS EQUIPMENT COMPANY — Salt Lake City, Utah

This drawing and all information thereon is the property of Eimco PEC and is confidential and must not be made public or copied. This drawing is loaned subject to return upon demand and is not to be used directly or indirectly in any way detrimental to our interests.

HOLD FRACTIONAL MACHINED DIMENSIONS TO ± 1/32"

D	DO NOT SCALE PRINTS	
C	DATE	3-13-87
B	DRAWN	KW
A	CHECK'D	RLA
	APPR.	

CLARIFIER TYPE C3DS
60'-0" DIA. x 16'-0" S.W.D.
GENERAL ARRANGEMENT DET.

01

DWG. NO. 23517C4 REV. A

REVISION	BY	CHECKED	DATE
INFL. COLUMN WAS 20" O.DIA.	KW	RLA	4-16-87

E-2660 Rev. 9/83

PIECE MARK	NO. REQ'D	MATERIAL	DESCRIPTION	MARKS	TOTAL WEIGHT

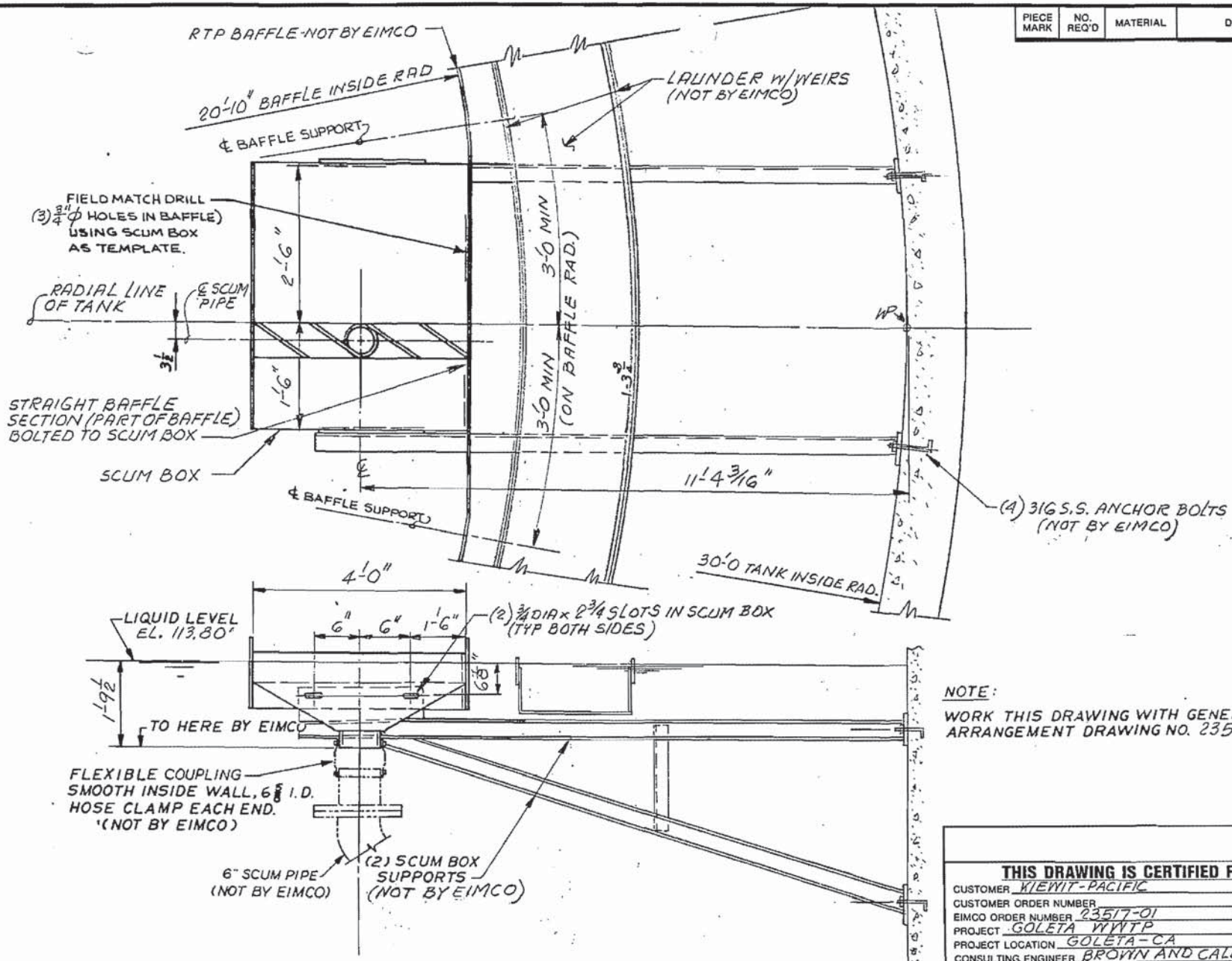

NOTE:

WORK THIS DRAWING WITH GENERAL ARRANGEMENT DRAWING NO. 23517 D1

THIS DRAWING IS CERTIFIED FOR E-2620A Rev. 9/82

CUSTOMER KIEWIT-PACIFIC
CUSTOMER ORDER NUMBER
EIMCO ORDER NUMBER 23517-01
PROJECT GOLETA WWTP
PROJECT LOCATION GOLETA-CA
CONSULTING ENGINEER BROWN AND CALDWELL
BY [illegible] DATE 3-19-87

EIMCO PROCESS EQUIPMENT COMPANY

SCUM BOX DETAIL

EIMCO PROCESS EQUIPMENT COMPANY — Salt Lake City, Utah

This drawing and all information thereon is the property of Eimco PEC and is confidential and must not be made public or copied. This drawing is loaned subject to return upon demand and is not to be used directly or indirectly in any way detrimental to our interests.

HOLD FRACTIONAL MACHINED DIMENSIONS TO ± 1/32"

D	DO NOT SCALE PRINTS	
C	DATE	3-12-87
B	DRAWN	KW
A	CHECK'D	RLA
	APPR.	[illegible]

C3DS CLARIFIER
60'-0 DIA x 16'-0 SWD
SCUM BOX DETAIL

01

DWG. NO. 23517C5 REV.

REVISION	BY	CHECKED	DATE

2660 Rev. 9/83

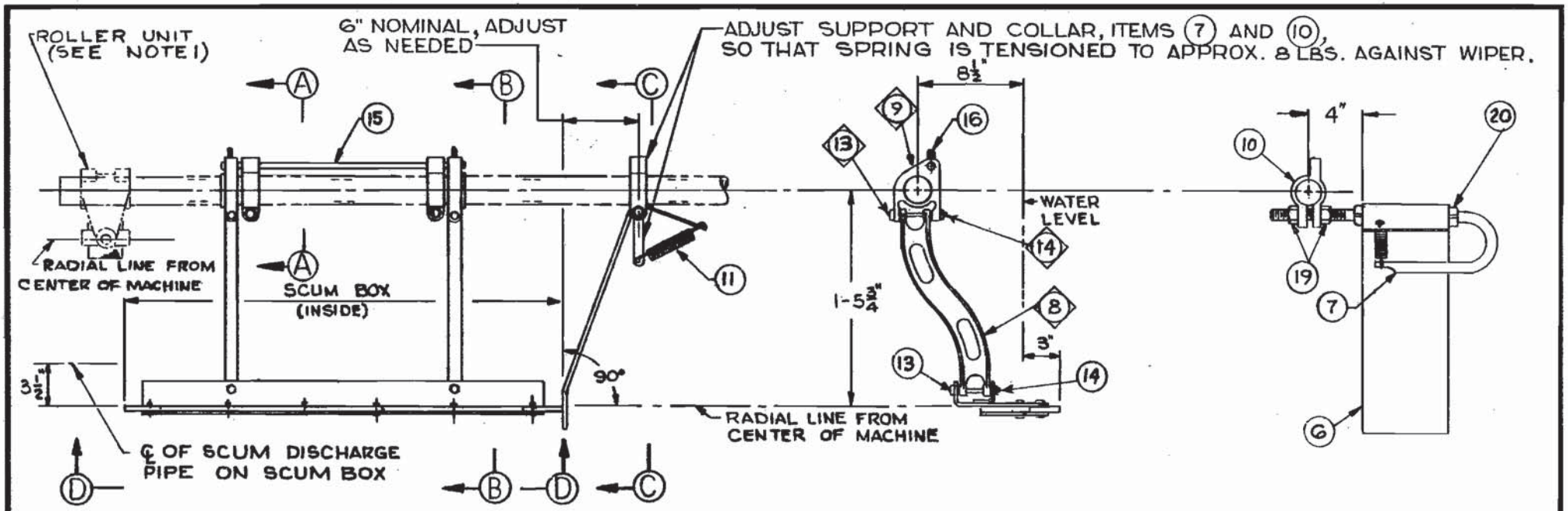

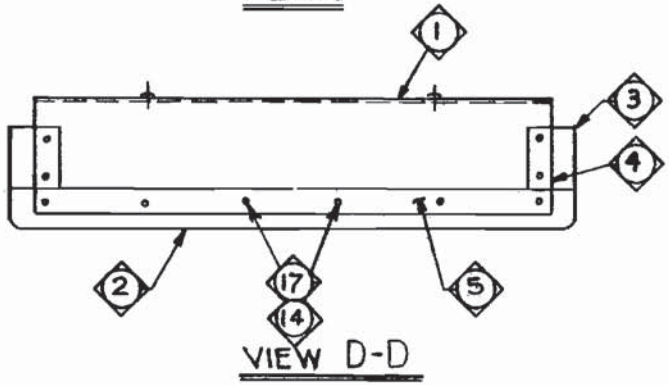

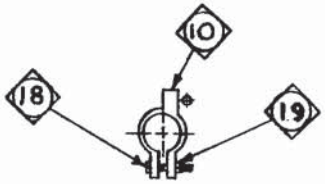

PART LISTS	
~~L 42700-1~~	~~(20' LG UNIT)~~
~~L 42700-2~~	~~(6' LG. UNIT)~~
L 42700-3	(4' LG. UNIT)
~~L 42700-4~~	~~(5' LG. UNIT)~~
~~L 42700-5~~	~~(6' LG. UNIT)~~

REVISION		
G	4665	7-20-76
F	3629	11-5-73
E	2755	2-2-72
D	2626	10-26-71
C	1053	11-17-69
B	446	5-15-68
A	7	1-11-67
	D/R	DATE

NOTE:
1. ROLLER UNIT PART Nº L46378 IS USED ONLY WHEN REQUIRED REFER TO JOB G.A. DRAWING
2. ◇ DENOTES SHOP ASSEMBLED

THE EIMCO CORPORATION Salt Lake City, Utah

This drawing and all information thereon is the property of the Eimco Corporation and is confidential and must not be made public or copied. This drawing is loaned subject to return upon demand and is not to be used directly or indirectly in any way detrimental to our interests.

HOLD FRACTIONAL MACHINED DIMENSIONS TO ± 1/64"

DO NOT SCALE PRINTS	
DATE	10-25-68
DR'WN	T.T.M.
CH'K'D	
APPR.	

SKIMMING DEVICE ASSEMBLY FOR SQUARE SCUM BOXES

ORDER No.
DATE ISSUED
DRAWING No. 42700 REV. C

INA 1 84

PIECE MARK	NO. REQ'D	MATERIAL	DESCRIPTION / REMARKS	TOTAL WEIGHT

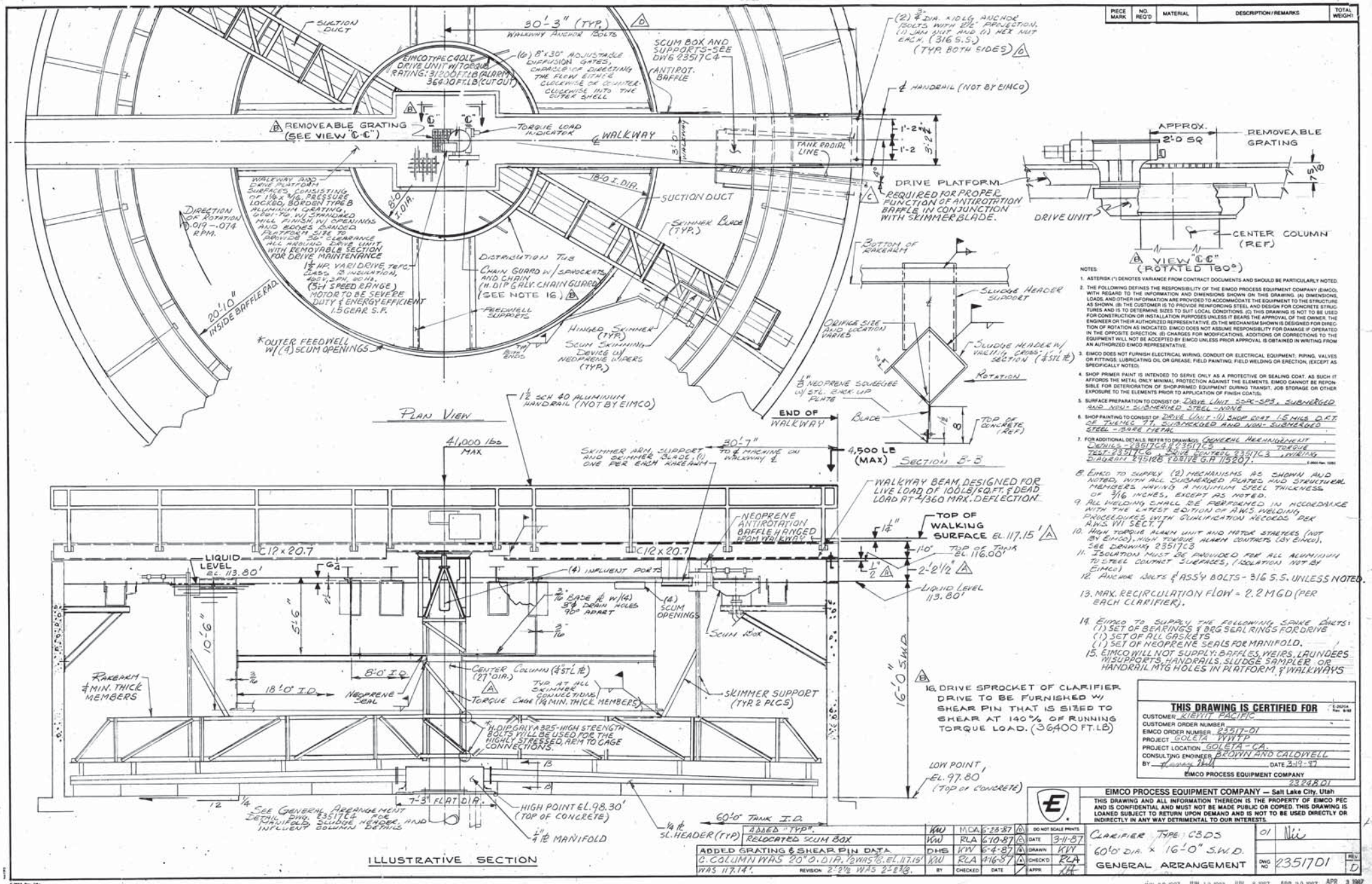

NOTES:

1. ASTERISK (*) DENOTES VARIANCE FROM CONTRACT DOCUMENTS AND SHOULD BE PARTICULARLY NOTED.
2. THE FOLLOWING DEFINES THE RESPONSIBILITY OF THE EIMCO PROCESS EQUIPMENT COMPANY (EIMCO) WITH REGARD TO THE INFORMATION AND DIMENSIONS SHOWN ON THIS DRAWING. (A) DIMENSIONS, LOADS, AND OTHER INFORMATION ARE PROVIDED TO ACCOMMODATE THE EQUIPMENT TO THE STRUCTURE AS SHOWN. (B) THE CUSTOMER IS TO PROVIDE REINFORCING STEEL AND DESIGN FOR CONCRETE STRUCTURES AND IS TO DETERMINE SIZES TO SUIT LOCAL CONDITIONS. (C) THIS DRAWING IS NOT TO BE USED FOR CONSTRUCTION OR INSTALLATION PURPOSES UNLESS IT BEARS THE APPROVAL OF THE OWNER. THE ENGINEER OR THEIR AUTHORIZED REPRESENTATIVE. (D) THE MECHANISM SHOWN IS DESIGNED FOR DIRECTION OF ROTATION AS INDICATED. EIMCO DOES NOT ASSUME RESPONSIBILITY FOR DAMAGE IF OPERATED IN THE OPPOSITE DIRECTION. (E) CHARGES FOR MODIFICATIONS, ADDITIONS OR CORRECTIONS TO THE EQUIPMENT WILL NOT BE ACCEPTED IF EIMCO UNLESS PRIOR APPROVAL IS OBTAINED IN WRITING FROM AN AUTHORIZED EIMCO REPRESENTATIVE.
3. EIMCO DOES NOT FURNISH ELECTRICAL WIRING, CONDUIT OR ELECTRICAL EQUIPMENT; PIPING, VALVES OR FITTINGS; LUBRICATING OIL OR GREASE; FIELD PAINTING, FIELD WELDING OR ERECTION, (EXCEPT AS SPECIFICALLY NOTED).
4. SHOP PRIMER PAINT IS INTENDED TO SERVE ONLY AS A PROTECTIVE OR SEALING COAT, AS SUCH IT AFFORDS THE METAL ONLY MINIMAL PROTECTION AGAINST THE ELEMENTS. EIMCO CANNOT BE REPONSIBLE FOR DETERIORATION OF SHOP-PRIMED EQUIPMENT DURING TRANSIT, JOB STORAGE OR OTHER EXPOSURE TO THE ELEMENTS PRIOR TO APPLICATION OF FINISH COATS.
5. SURFACE PREPARATION TO CONSIST OF: DRIVE UNIT SSPC-SP3, SUBMERGED AND NON-SUBMERGED STEEL - NONE
6. SHOP PAINTING TO CONSIST OF: DRIVE (UNIT-1) SHOP COAT 1.5 MILS D.F.T. OF TNEMEC 71, SUBMERGED AND NON-SUBMERGED STEEL - BARE METAL
7. FOR ADDITIONAL DETAILS REFER TO DRAWINGS: GENERAL ARRANGEMENT DETAILS - 23517C3 & 23517C5 TORQUE TEST - 23517C6 DRIVE CONTROL 23517C3 WIRING DIAGRAM 295168 (DRIVE G.A. 115207).
8. EIMCO TO SUPPLY (2) MECHANISMS AS SHOWN AND NOTED, WITH ALL SUBMERGED PLATES AND STRUCTURAL MEMBERS HAVING A MINIMUM STEEL THICKNESS OF 3/16 INCHES, EXCEPT AS NOTED.
9. ALL WELDING SHALL BE PERFORMED IN ACCORDANCE WITH THE LATEST EDITION OF AWS WELDING PROCEDURES WITH QUALIFICATION RECORDS PER AWS VII SECT. 7
10. HIGH TORQUE ALARM UNIT AND MOTOR STARTERS (NOT BY EIMCO), HIGH TORQUE ALARM CONTACTS (BY EIMCO). SEE DRAWING 23517C3
11. ISOLATION MUST BE PROVIDED FOR ALL ALUMINUM TO STEEL CONTACT SURFACES, (ISOLATION NOT BY EIMCO)
12. ANCHOR BOLTS & ASS'Y BOLTS - 316 S.S. UNLESS NOTED.
13. MAX. RECIRCULATION FLOW = 2.2 MGD (PER EACH CLARIFIER).
14. EIMCO TO SUPPLY THE FOLLOWING SPARE PARTS:
    (1) SET OF BEARINGS & BRG SEAL RINGS FOR DRIVE
    (1) SET OF ALL GASKETS
    (1) SET OF NEOPRENE SEALS FOR MANIFOLD.
15. EIMCO WILL NOT SUPPLY: BAFFLES, WEIRS, LAUNDERS W/ SUPPORTS, HANDRAILS, SLUDGE SAMPLER OR HANDRAIL MTG HOLES IN PLATFORM & WALKWAYS
16. DRIVE SPROCKET OF CLARIFIER DRIVE TO BE FURNISHED W/ SHEAR PIN THAT IS SIZED TO SHEAR AT 140% OF RUNNING TORQUE LOAD. (36400 FT.LB)

THIS DRAWING IS CERTIFIED FOR E-2605A Rev. 8/92

CUSTOMER: KIEWIT PACIFIC
CUSTOMER ORDER NUMBER: 23517-01
EIMCO ORDER NUMBER:
PROJECT: GOLETA WWTP
PROJECT LOCATION: GOLETA - CA.
CONSULTING ENGINEER: BROWN AND CALDWELL
BY: Harvey Hall DATE: 3-19-97

EIMCO PROCESS EQUIPMENT COMPANY
23268.01

EIMCO PROCESS EQUIPMENT COMPANY — Salt Lake City, Utah

THIS DRAWING AND ALL INFORMATION THEREON IS THE PROPERTY OF EIMCO PEC AND IS CONFIDENTIAL AND MUST NOT BE MADE PUBLIC OR COPIED. THIS DRAWING IS LOANED SUBJECT TO RETURN UPON DEMAND AND IS NOT TO BE USED DIRECTLY OR INDIRECTLY IN ANY WAY DETRIMENTAL TO OUR INTERESTS.

	BY	CHECKED	DATE		
ADDED "TYP".	KW	MCA	6-25-87	A	DO NOT SCALE PRINTS
RELOCATED SCUM BOX	KW	RLA	6-10-87	A	DATE 3-11-87
ADDED GRATING & SHEAR PIN DATA	DHS	KW	6-4-87	A	DRAWN KW
C. COLUMN WAS 20" O.DIA. 1/2 WAS 5/8. EL. 117.15' WAS 117.14'.	KW	RLA	4-16-87	A	CHECK'D RLA
REVISION 2'-2 1/2 WAS 2'-2 3/8.	BY	CHECKED	DATE		APPR.

CLARIFIER TYPE: C3DS
60'-0" DIA. x 16'-0" S.W.D.
GENERAL ARRANGEMENT

01

DWG NO. 23517D1 REV. D

JUN 29 1987 JUN 12 1987 JUN 8 1987 APR 20 1987 APR 3 1987

SECTION 13228
WASTE GAS BURNER

PART 1 - GENERAL

1.1 SUMMARY

A. Section Includes:
   1. Waste gas burner.

B. Related Sections include but are not necessarily limited to:
   1. Division 0 - Bidding Requirements, Contract Forms, and Conditions of the Contract.
   2. Division 1 - General Requirements.
   3. Section 09905 - Painting and Protective Coatings.
   4. Section 13440 - Instrumentation for Process Control: Basic Requirements.
   5. Division 15 - Mechanical

1.2 QUALITY ASSURANCE

A. Referenced Standards:
   1. American Society of Mechanical Engineers (ASME)
   2. National Electrical Manufacturers Association (NEMA)
   3. National Fire Protection Association (NFPA).

B. To ensure quality, conformance, and reliability with regard to the manufacturing and production of equipment described in this section, the Seller shall meet the requirements listed in this section:
   1. Shall have a minimum of five (5) installations of enclosed burner for waste gas burning of the same type and similar size that have been in successful operation for a minimum of five (5) years

1.3 SUBMITTALS

A. Shop Drawings:
   1. See Section 01340 for requirements for the mechanics and administration of the submittal process.
   2. Fabrication and/or layout drawings:
      a. Schematic drawing of waste gas burner showing major components and corresponding initial pressure settings.
      b. Schematic to include tag numbers assigned to each component by Contract Documents.
   3. Product technical data:
      a. Acknowledgement that products submitted meet requirements of standards referenced.
      b. Manufacturer's installation instructions.
      c. Calibration constants and pressure settings for devices requiring settings.
         1) Calibrate settings using certified manometer.

B. Operation and Maintenance Manuals:
   1. See Section 01340 for requirements for:
      a. The mechanics and administration of the submittal process.
      b. The content of Operation and Maintenance Manuals.

1.4 WARRANTY

A. Enclosed waste gas burner manufacturer to provide a written guarantee that supplied equipment will meet manufacturer provided performance requirement upon design criteria given in 2.1.B of part 2 of this section.

B. Manufacturer will warranty the waste gas burner and system components to be free from defects due to material or workmanship for a period of not less than twelve (12) months from system startup.

C. The Manufacturer shall repair and/or replace a defective part or component within the specified warranty periods, FOB project site, at the Seller's expense.

1.5 SYSTEM DESCRIPTION

A. The components described in this Section shall be supplied by one (1) manufacturer and when interconnected with piping constitutes a complete waste gas burner system.
   1. Each component is to be provided to integrate with other components for a complete operating system.
   2. Match the waste gas burner system to all existing devices conveying digester waste gas to the burner.

PART 2 - PRODUCTS

2.1 WASTE GAS BURNER

A. Acceptable Manufactures:
   1. Varec
   2. Or Equal

B. Inlet biogas characteristics:

Gas analysis parameter	Value	Unit
Methane	59.675	Mole%
Carbon dioxide	39.717	Mole%
Nitrogen	0.422	Mole%
Propane	0.185	Mole%
Other Compounds	≤0.001	Mole% each
Gross heating value (dry ideal)	607	BTU/cf
Gross heating value (dry real)	610	BTU/cf
Gross heating value (wet ideal)	597	BTU/cf
Net heating value (dry ideal)	534	Btu/cf
Gross heating value	8,316	BTU/cf
Fuel factor	9,420	SCF/MMBTU
Relative density	0.945	
Pressure base	14.696	psi

C. Design Criteria: Waste gas burner meeting the following:
   1. Type: Enclosed flare
   2. Quantity: 1
   3. Inlet capacity (maximum): 180 scfm
   4. Expected monthly input: 81 scfm
   5. Turn-down ration (minimum): 10:1
   6. Application: Excess digester gas burn-off
   7. Use: Continuous
   8. Normal operating pressure at flare manifold: 7 inches w.c.
   9. Pilot gas: Biogas and natural gas
   10. Inlet pipe size: 6 inches

D. Performance Criteria:
   1. Destruction efficiency: >99%

E. Fabrication:

1. The flare shall be constructed to allow combustion air to obtain proper air-gas mixer.
2. The flare shall have no visible flame.
3. The unit shall come with orifice burners and venturi nozzle tips constructed of stainless steel.
4. Material of construction shall be safe and reliable for biogas and heat applications.
   a. Stainless steel construction is required for all components in contact with biogas
5. Automatic, electric, pilot igniter for burner.
   a. Igniter suitable for operation using 120 V, 1 PH, 60 Hz power supply.
6. Flame sensor required.
7. Cables and other heat sensitive devices properly shielded and enclosed.

F. Pilot Gas Supply:
1. Continuous flame nozzle shall be mounted integral to the burner. Pilot flame shall extend through waste gas flow profile to ensure ignition of waste gas regardless of the flow rate.
2. Provide an enclosed burner that will allow operation using pilot gas supply pressure of 4IN WC minimum and 14IN WC maximum without the requirement of blower assisted fuel or air pressure.
3. Pilot gas runs continuously when there is a demand to flare or combust waste gas, otherwise the burner remains on standby and does not continuously use pilot gas.
4. Pilot gas connection at site shall be ¾” for natural gas and 1 ½” for Biogas.

G. Control Panel:
1. Control panel shall be a NEMA 7 enclosure.
2. A spark generator must be included.
3. Three-position selector switch for standby/auto/manual modes
4. Pilot flame monitoring
5. Status light for pilot lit, pilot out and pilot failure
6. Heater and thermostat
7. Manual ignition button
8. Adjustable thermocouple set point
9. SPDT contacts for remote indication of Pilot On/Off and Pilot Flame Failure function.
   a.
10. Control panel shall include necessary pilot controls to provide automatic re-ignition of the burner. It will provide flame sensing and re-ignition sequence in case the pilot is lost. In case of a pilot flame failure, the solenoid valves shall fail close.

H. Operation Strategy
1. Local operation
   a. Power On/Off switch in On shall provide power to Burner unit.
   b. Selector switch HOA in Hand mode, the Burner can be ignited manually by operating manual ignite switch from the local control panel provided waste gas supply is available for the burner. Pilot on indication shall come on when the thermocouple heats up to the set point.
   c. The Burner and the pilot will remain lit and will attempt re-ignition in case the pilot is lost. It will continue to reignite until the thermocouple heats up signaling pilot on indication.
2. Automatic operation:
   a. HOA switch in auto mode, solenoid valve on Burner waste gas inlet line shall open upon receipt of a waste gas line high pressure switch activation signal delayed for a set duration. Operator shall set the pressure.
   b. Burner controller shall start ignition automatically after opening of the solenoid valve delayed for an operator set time. With the thermocouple reaching a set temperature value, control panel will indicate pilot On status.
   c. If the thermocouple cools below its set point after the pilot is On, the controller will switch to alarm status and indicate Pilot Off on the panel. It will continue to reignite until the thermocouple heats up signaling pilot on indication.

d. A system fail alarm will come on indicating a pilot flame failure if the thermocouple does not heat up to the specified setting on the controller. Requires manual reset.
e. When the waste gas pressure falls below the setting of the high pressure switch, the controller shall change operation from automatic mode to standby mode. The waste gas solenoid valve will close and extinguish the pilot.
f. Total system shall remain in standby mode until the high pressure switch is activated signaling the burner to start again in automatic mode.

3. In all modes of operation, the Local Control Panel shall provide the following local indications:
   a. Power on
   b. Auto/manual operation mode
   c. Pilot on/off
   d. Fail alarm
4. In all modes of operation, LCP shall transmit the following signals to SCADA.
   a. Burner auto
   b. Pilot on
   c. Fail alarm

I. Related Equipments:
1. Pressure Relief-Flame Trap Assembly:
   a. Acceptable Manufacturers:
      1) Varec
   b. Fabrication:
      1) ASME B16.1 Class 125 flanged end connections.
      2) Unit to include both a pressure relief section and a flame trap section.
   c. Pressure relief portion:
      1) Back pressure regulator valve actuated by a spring loaded diaphragm.
      2) Include a spring barrel with a glass enclosed pointer and scale to indicate relief pressure setting.
      3) Unit to permit setting adjustments without disassembling the diaphragm housing.
      4) Cast aluminum unit with stainless moving parts and spring and synthetic rubber fiber reinforced diaphragm.
      5) Setting range: 0 to 16 IN WC.
      6) Operating point: Operator's set point
      7) 1/2 IN NPT connections for gas pressure sensing tap and atmospheric vent.
   d. Flame trap portion:
      1) Cast aluminum.
      2) Bank assembly: All aluminum construction.
      3) Easy removal for cleaning.
      4) Net free area through bank assembly: Minimum of four (4) times inlet connection size.
      5) Construct grids of bank individual corrugate stamped and rectangular shaped sheets.
      6) Arrange for individual removal.
   e. Controls:
      1) Interconnect (functionally) pressure relief regulator and flame trap by a thermal shut-off valve assembly which will automatically close the regulator by applying full upstream gas pressure on the top of the diaphragm housing in the event a fusible element is released due to gas temperature reaching 260 DegF at the flame trap outlet.
      2) Fusible element replaceable without disassembling the valve.
   f. Spare Parts for Each Size of Pressure Relief-Flame Trap Assembly:
      1) Fusible elements: Four (4) each.
      2) Diaphragm assembly: One (1) each.
2. Springs: One (1) setManually Operated Drip Traps:

a. Acceptable Manufacturers:
   1) Varec
b. Fabrication:
   1) Manually operated drip traps 1 IN NPT inlet and outlet connection and a 2-1/2 quart storage capacity.
   2) Rotating disc type drip traps with an air inlet port to permit free flow of condensate from bowl when draining.
   3) Gas cannot exit while draining or revolving operating handle.
   4) Cast aluminum unit with stainless steel shaft and springs.
   5) Working pressure: 5 psig.
   6) Pipe discharge from trap to nearest equipment or floor drain.

3. Required solenoid valve and isolation valves shall be stainless steel construction for all components in contact with biogas and compatible with manufacturer scope of supply.

J. Spare Parts for Each Size of Burner:
1. Spark electrodes: Two (2) sets.
2. Optical sensor: One (1) each.

PART 3 - EXECUTION

3.1 INSTALLATION

A. Contractor shall install the burner per the plans and specs and per the manufacturer's recommendation.

3.2 FIELD QUALITY SERCIVES

A. Manufacturer Field Services
1. The Manufacturer shall supply the services of a qualified field service engineer for the following time periods:
   a. Review the installation
   b. Start-up, commissioning, and training
2. Field services shall be a minimum of 5 days onsite by qualified field service engineer

B. Startup
1. Coordinate with Plant Operations staff to test the burner through the range of biogas flows and ensure compliance with emission requirements.

END OF SECTION

DIVISION 15

MECHANICAL

SECTION 15060
PIPE AND PIPE FITTINGS: BASIC REQUIREMENTS

PART 1 - GENERAL

1.1 SUMMARY

A. Section Includes:
1. Process piping systems.
2. Utility piping systems.
3. Plumbing piping systems.

B. Related Sections include but are not necessarily limited to:
1. Division 0 - Bidding Requirements, Contract Forms, and Conditions of the Contract.
2. Division 1 - General Requirements.
3. Section 02221 - Trenching, Backfilling, and Compacting for Utilities.
4. Section 09905 - Painting and Protective Coatings.
5. Section 10444 - Signage.
6. Section 13440 - Instrumentation for Process Control: Basic Requirements.
7. Section 13442 - Primary Elements and Transmitters.
8. Section 15090 - Pipe Support Systems.
9. Section 15100 - Valves: Basic Requirements.

1.2 QUALITY ASSURANCE

A. Referenced Standards:
1. American Association of State Highway and Transportation Officials (AASHTO):
   a. M36, Corrugated Steel Culverts and Underdrains.
   b. M190, Standard Specification for Bituminous Coated Corrugated Metal Culvert Pipe and Pipe Arches.
   c. M252, Standard Specification for Corrugated Polyethylene Drainage Tubing.
   d. M294, Interim Specification for Corrugated Polyethylene Pipe 12 to 24 Inch Diameter.
2. American Iron and Steel Institute (AISI).
3. American Society of Mechanical Engineers (ASME):
   a. B16.3, Malleable Iron Threaded Fittings.
   b. B16.5, Pipe Flanges and Flanged Fittings.
   c. B16.9, Factory-Made Wrought Steel Butt-Welding Fittings.
   d. B16.22, Wrought Copper and Bronze Solder - Joint Pressure Fittings.
   e. B16.26, Cast Copper Alloy Fittings for Flared Copper Tubes.
   f. B36.19, Stainless Steel Pipe.
   g. B40.100, Pressure Gauges and Gauge Attachments.
4. ASTM International (ASTM):
   a. A53, Standard Specification for Pipe, Steel, Black and Hot-Dipped, Zinc-Coated, Welded and Seamless.
   b. A74, Standard Specification for Cast Iron Soil Pipe and Fittings.
   c. A106, Standard Specification for Seamless Carbon Steel Pipe for High-Temperature Service.
   d. A126, Standard Specification for Gray Iron Castings for Valves, Flanges, and Pipe Fittings.
   e. A182, Standard Specification for Forged or Rolled Alloy-Steel Pipe Flanges, Forged Fittings, and Valves and Parts for High-Temperature Service.
   f. A197, Standard Specification for Cupola Malleable Iron.
   g. A234, Standard Specification for Pipe Fittings of Wrought Carbon Steel and Alloy Steel for Moderate and High Temperature Service.

h. A269, Standard Specification for Seamless and Welded Austenitic Stainless Steel Tubing for General Service.
i. A312, Standard Specification for Seamless, Welded, and Heavily Cold Worked Austenitic Stainless Steel Pipes.
j. A518, Standard Specification for Corrosion-Resistant High-Silicon Iron Castings.
k. A536, Standard Specification for Ductile Iron Castings.
l. A587, Standard Specification for Electric-Resistance-Welded Low-Carbon Steel Pipe for the Chemical Industry.
m. A774, Standard Specification for As-Welded Wrought Austenitic Stainless Steel Fittings for General Corrosive Service at Low and Moderate Temperatures.
n. A778, Standard Specification for Welded, Unannealed Austenitic Stainless Steel Tubular Products.
o. B88, Standard Specification for Seamless Copper Water Tube.
p. C14, Standard Specification for Concrete Sewer, Storm Drain, and Culvert Pipe.
q. C76, Standard Specification for Reinforced Concrete Culvert, Storm Drain, and Sewer Pipe.
r. C425, Standard Specification for Compression Joints for Vitrified Clay Pipe and Fittings.
s. C443, Standard Specification for Joints for Concrete Pipe and Manholes, Using Rubber Gaskets.
t. C564, Standard Specification for Rubber Gaskets for Cast Iron Soil Pipe and Fittings.
u. C700, Standard Specification for Vitrified Clay Pipe, Extra Strength, Standard Strength and Perforated.
v. D1785, Standard Specification for Poly(Vinyl Chloride) (PVC) Plastic Pipe, Schedules 40, 80, and 120.
w. D2466, Standard Specification for Poly(Vinyl Chloride) (PVC) Plastic Pipe Fittings, Schedule 40.
x. D2467, Standard Specification for Poly(Vinyl Chloride) (PVC) Plastic Pipe Fittings, Schedule 80.
y. D4101, Standard Specification for Polypropylene Plastic Injection and Extrusion Materials.
z. F439, Standard Specification for Chlorinated Poly(Vinyl Chloride) (CPVC) Plastic Pipe Fittings, Schedule 80.
aa. F441, Standard Specification for Chlorinated Poly(Vinyl Chloride) (CPVC) Plastic Pipe, Schedules 40 and 80.
bb. F491, Standard Specification for Poly(Vinylidene Fluoride)(PVDF) Plastic-Lined Ferrous Metal Pipe and Fittings.

5. American Water Works Association (AWWA):
   a. B300, Standard for Hypochlorite.
   b. C200, Steel Water Pipe 6 IN and Larger.
   c. C207, Standard for Steel Pipe Flanges for Waterworks Service - Sizes 4 IN through 144 IN.
   d. C208, Dimensions for Fabricated Steel Water Pipe Fittings.
   e. C606, Grooved and Shouldered Joints.
   f. C651, Standard for Disinfecting Water Mains.
   g. C800, Standard for Underground Service Line Valves and Fittings.
6. American Water Works Association/American National Standards Institute (AWWA/ANSI):
   a. C110/A21.10, Ductile-Iron and Gray-Iron Fittings, 3 IN through 48 IN for Water and Other Liquids.
   b. C111/A21.11, Rubber-Gasket Joints for Ductile-Iron and Gray-Iron Pressure Pipe and Fittings.
   c. C115/A21.15, Flanged Ductile-Iron Pipe with Threaded Flanges.
   d. C151/A21.51, Ductile-Iron Pipe, Centrifugally Cast In Metal Molds or Sand-Lined Molds for Water or Other Liquids.

e. C153/A21.53, Ductile-Iron Compact Fittings, 3 IN Through 16 IN, for Water and Other Liquids.

7. Chlorine Institute, Inc. (CI):
   a. Pamphlet 6, Piping Systems for Dry Chlorine.
8. Cast Iron Soil Pipe Institute (CISPI):
   a. 301, Standard Specification for Hubless Cast Iron Soil Pipe and Fittings for Sanitary and Storm Drain, Waste, and Vent Piping Applications.
9. International Plumbing Code (IPC).
10. National Fire Protection Association (NFPA):
    a. 54, National Fuel Gas Code.
    b. 69, Standard on Explosion Prevention Systems.
11. Underwriters Laboratories, Inc. (UL).

B. Coordinate flange dimensions and drillings between piping, valves, and equipment.

1.3 DEFINITIONS

A. Hazardous Gas Systems: Digester gas, chlorine gas, sulfur dioxide gas, carbon dioxide gas, lab gases and natural gas system.

1.4 SYSTEM DESCRIPTION

A. Piping Systems Organization and Definition:
   1. Piping services are grouped into designated systems according to the chemical and physical properties of the fluid conveyed, system pressure, piping size and system materials of construction.
   2. See PIPING SPECIFICATION SCHEDULES in PART 3.

1.5 SUBMITTALS

A. Shop Drawings:
   1. See Section 01340 for requirements for the mechanics and administration of the submittal process.
   2. Fabrication and/or layout drawings:
      a. Exterior yard piping drawings (minimum scale 1 IN equals 10 FT) with information including:
         1) Dimensions of piping lengths.
         2) Invert or centerline elevations of piping crossings.
         3) Acknowledgement of bury depth requirements.
         4) Details of fittings, tapping locations, thrust blocks, restrained joint segments, harnessed joint segments, hydrants, and related appurtenances.
         5) Acknowledge designated valve or gate tag numbers, manhole numbers, instrument tag numbers, pipe and line numbers.
         6) Line slopes and vents.
      b. Interior piping drawings (minimum scale 1/8 IN equals 1 FT) with information including:
         1) Dimensions of piping from column lines or wall surfaces.
         2) Invert dimensions of piping.
         3) Centerline elevation and size of intersecting ductwork, conduit/conduit racks, or other potential interferences requiring coordination.
         4) Location and type of pipe supports and anchors.
         5) Locations of valves and valve actuator type.
         6) Details of fittings, tapping locations, equipment connections, flexible expansion joints, connections to equipment, and related appurtenances.
         7) Acknowledgement of valve, equipment and instrument tag numbers.
         8) Provisions for expansion and contraction.
         9) Line slopes and air release vents.
         10) Rough-in data for plumbing fixtures.

c. Schedule of interconnections to existing piping and method of connection.

3. Product technical data including:
   a. Acknowledgement that products submitted meet requirements of standards referenced.
   b. Copies of manufacturer's written directions regarding material handling, delivery, storage and installation.
   c. Separate schedule sheet for each piping system scheduled in this Section showing compliance of all system components.
      1) Attach technical product data on gaskets, pipe, fittings, and other components.

B. Miscellaneous Submittals:
   1. Qualifications of lab performing disinfection analysis on water systems.
   2. Test reports:
      a. Copies of pressure test results on all piping systems.
      b. Reports defining results of dielectric testing and corrective action taken.
      c. Disinfection test report.
      d. Notification of time and date of piping pressure tests.

C. Operation and Maintenance Manuals:
   1. See Section 01340 for requirements for:
      a. The mechanics and administration of the submittal process.
      b. The content of Operation and Maintenance Manuals.

1.6 DELIVERY, STORAGE, AND HANDLING

A. Protect pipe coating during handling using methods recommended by manufacturer.
   1. Use of bare cables, chains, hooks, metal bars or narrow skids in contact with coated pipe is not permitted.

B. Prevent damage to pipe during transit.
   1. Repair abrasions, scars, and blemishes.
   2. If repair of satisfactory quality cannot be achieved, replace damaged material immediately.

PART 2 - PRODUCTS

2.1 ACCEPTABLE MANUFACTURERS

A. Subject to compliance with the Contract Documents, the following manufacturers are acceptable:
   1. Insulating unions:
      a. "Dielectric" by Epco.
   2. Dirt strainers (Y type):
      a. Mueller (#351).
      b. Sarco.
      c. Armstrong.
   3. Chemical strainers (Y type):
      a. Chemtrol.
      b. Asahi.
   4. Dry disconnect couplings:
      a. Kamlock.
   5. Dielectric flange kit:
      a. PSI.
      b. Maloney.
      c. Central Plastics.
   6. Pipe saddles (for gage installation):
      a. Dresser Style 91 (steel and ductile iron systems).
      b. Dresser Style 194 (non-metallic systems).

B. Submit request for substitution in accordance with Specification Section 01640.

2.2 PIPING SPECIFICATION SCHEDULES

A. Piping system materials, fittings and appurtenances are subject to requirements of specific piping specification schedules located at the end of PART 3 of this Section.

2.3 COMPONENTS AND ACCESSORIES

A. Insulating Components:
   1. Dielectric flange kits:
      a. Flat faced.
      b. 1/8 IN thick dielectric gasket, phenolic, non-asbestos.
      c. Suitable for 175 psi, 210 DegF.
      d. 1/32 IN wall thickness bolt sleeves.
      e. 1/8 IN thick phenolic insulating washers.
   2. Dielectric unions:
      a. Screwed end connections.
      b. Rated at 175 psi, 210 DegF.
      c. Provide dielectric gaskets suitable for continuous operation at union rated temperature and pressure.

B. Dirt Strainers:
   1. Y-type.
   2. Composition bronze.
   3. Rated for test pressure and temperature of system in which they are installed.
   4. 20 mesh Monel screen.
   5. Threaded bronze plug in the blowoff outlet.
   6. Threaded NPT end connections.

C. Strainers for Chemical Applications:
   1. Y-type.
   2. Strainers of same material, test pressure, and temperature rating as system in which strainer is placed.

D. Reducers:
   1. Furnish appropriate size reducers and reducing fittings to mate pipe to equipment connections.
   2. Connection size requirements may change from those shown on Drawings depending on equipment furnished.

E. Protective Coating and Lining:
   1. Include pipe, fittings, and appurtenances where coatings, linings, paint, tests and other items are specified.
   2. Field paint pipe in accordance with Section 09905.

F. Underground Warning Tape:
   1. See Section 10444.

G. Pressure Gages:
   1. See Section 11005 and Section 13442.

H. Dry Disconnect Couplings:
   1. Adapters:
      a. Male adapters: Size shown on Drawings.
      b. Adapters:
         1) Female NPT end connection for sludge and flush applications.
         2) Male NPT end connection for chemical applications.
      c. Construct adapters for sludge applications from cast iron or steel.
      d. Construct adapters for chemical and PVC system applications 3 IN and below from polypropylene.
         1) Above 3 IN size, provide stainless steel units.

2. Couplers:
   a. Built-in valve and spring loaded poppet which close automatically when disconnected.
   b. Designed to remain with only one (1) arm locked in closed position.
   c. Construct couplers for sludge applications fabricated from material utilized for adapters.
   d. Construct couplers for chemical and PVC system applications 3 IN and less from polypropylene with stainless steel arms and pins.
      1) Above 3 IN, provide stainless steel units.
   e. Gasket: Compatible with conveyed liquid.
3. Dust caps: For all adapters.

I. Valves:
   1. See Section 15100.

PART 3 - EXECUTION

3.1 EXTERIOR BURIED PIPING INSTALLATION

A. Unless otherwise shown on the Drawings, provide a minimum of 4 FT and maximum of 8 FT earth cover over exterior buried piping systems and appurtenances conveying water, fluids, or solutions subject to freezing.

B. Ease all pipe below structures per standard pipe encasement detail.

C. Enter and exit through structure walls, floors, and ceilings by using penetrations and seals specified in Section 01800 and as shown on Drawings.

D. When entering or leaving structures with buried mechanical joint piping, install joint within 2 FT of point where pipe enters or leaves structure.
   1. Install second joint not more than 6 FT nor less than 4 FT from first joint.

E. Install expansion devices as necessary to allow expansion and contraction movement.

F. Laying Pipe In Trench:
   1. Excavate and backfill trench in accordance with Section 02221.
   2. Clean each pipe length thoroughly and inspect for compliance to Specifications.
   3. Grade trench bottom and excavate for pipe bell and lay pipe on trench bottom.
   4. Install gasket or joint material according to manufacturer's directions after joints have been thoroughly cleaned and examined.
   5. Except for first two (2) joints, before making final connections of joints, install two (2) full sections of pipe with earth tamped along side of pipe or final with bedding material placed.
   6. Lay pipe in only suitable weather with good trench conditions.
      a. Never lay pipe in water except where approved by Engineer.
   7. Seal open end of line with watertight plug if pipe laying stopped.
   8. Remove water in trench before removal of plug.

G. Lining Up Push-On Joint Piping:
   1. Lay piping on route lines shown on Drawings.
   2. Deflect from straight alignments or grades by vertical or horizontal curves or offsets.
   3. Observe maximum deflection values stated in manufacturer's written literature.
   4. Provide special bends when specified or where required alignment exceeds allowable deflections stipulated.
   5. Install shorter lengths of pipe in such length and number that angular deflection of any joint, as represented by specified maximum deflection, is not exceeded.

H. Anchorage and Blocking:
   1. Provide reaction blocking, anchors, joint harnesses, or other acceptable means for preventing movement of piping caused by forces in or on buried piping tees, wye branches, plugs, or bends.

2. Place concrete blocking so that it extends from fitting into solid undisturbed earth wall.
   a. Concrete blocks shall not cover pipe joints.
3. Provide bearing area of concrete in accordance with drawing detail.

I. Install underground hazard warning tape per Section 10400.

J. Install insulating components where dissimilar metals are joined together.

K. Joint Restraint:
1. Provide mechanically restrained joints for preventing movement of piping caused by forces in or on buried piping tees, wye branches, plugs, or bends.

3.2 INTERIOR AND EXPOSED EXTERIOR PIPING INSTALLATION

A. Install piping in vertical and horizontal alignment as shown on Drawings.

B. Alignment of piping smaller than 4 IN may not be shown; however, install according to Drawing intent and with clearance and allowance for:
1. Expansion and contraction.
2. Operation and access to equipment, doors, windows, hoists, moving equipment.
3. Headroom and walking space for working areas and aisles.
4. System drainage and air removal.

C. Enter and exit through structure walls, floor and ceilings using penetrations and seals specified in Section 01800 and as shown on the Drawings.

D. Install vertical piping runs plumb and horizontal piping runs parallel with structure walls.

E. Pipe Support:
1. Use methods of piping support as shown on Drawings and as required in Section 15090.
2. Where pipes run parallel and at same elevation or grade, they may be grouped and supported from common trapeze-type hanger, provided hanger rods are increased in size as specified for total supported weight.
   a. The pipe in the group requiring the least maximum distance between supports shall set the distance between trapeze hangers.
3. Size pipe supports with consideration to specific gravity of liquid being piped.

F. Locate and size sleeves and castings required for piping system.
1. Arrange for chases, recesses, inserts or anchors at proper elevation and location.

G. Use reducing fittings throughout piping systems.
1. Bushings will not be allowed unless specifically approved.

H. Equipment Drainage and Miscellaneous Piping:
1. Provide drip pans and piping at equipment where condensation may occur.
2. Hard pipe stuffing box leakage to nearest floor drain.
3. Avoid piping over electrical components such as motor control centers, panelboards, etc.
   a. If piping must be so routed, utilize 16 GA, 316 stainless steel drip pan under piping and over full length of electrical equipment.
   b. Hard pipe drainage to nearest floor drain.
4. Collect system condensate at drip pockets, traps and blowoff valves.
5. Provide drainage for process piping at locations shown on Drawings in accordance with Drawing details.
6. For applications defined above and for other miscellaneous piping which is not addressed by a specific piping service category in PART 1, provide 304 stainless steel piping and fittings.
   a. Size to handle application with 3/4 IN being minimum size provided.

I. Unions:
1. Install in position which will permit valve or equipment to be removed without dismantling adjacent piping.
2. Mechanical type couplings may serve as unions.
3. Additional flange unions are not required at flanged connections.

J. Install expansion devices as necessary to allow expansion/contraction movement.

K. Provide full face gaskets on all systems.

L. Anchorage and Blocking:
   1. Block, anchor, or harness exposed piping subjected to forces in which joints are installed to prevent separation of joints and transmission of stress into equipment or structural components not designed to resist those stresses.

M. Equipment Pipe Connections:
   1. Equipment - General:
      a. Exercise care in bolting flanged joints so that there is no restraint on the opposite end of pipe or fitting which would prevent uniform gasket pressure at connection or would cause unnecessary stresses to be transmitted to equipment flanges.
      b. Where push-on joints are used in conjunction with flanged joints, final positioning of push-on joints shall not be made until flange joints have been tightened without strain.
      c. Tighten flange bolts at uniform rate which will result in uniform gasket compression over entire area of joint.
         1) Provide tightening torque in accordance with manufacturer's recommendations.
      d. Support and match flange faces to uniform contact over their entire face area prior to installation of any bolt between the piping flange and equipment connecting flange.
      e. Permit piping connected to equipment to freely move in directions parallel to longitudinal centerline when and while bolts in connection flange are tightened.
      f. Align, level, and wedge equipment into place during fitting and alignment of connecting piping.
      g. Grout equipment into place prior to final bolting of piping but not before initial fitting and alignment.
      h. To provide maximum flexibility and ease of alignment, assemble connecting piping with gaskets in place and minimum of four (4) bolts per joint installed and tightened.
         1) Test alignment by loosening flange bolts to see if there is any change in relationship of piping flange with equipment connecting flange.
         2) Realign as necessary, install flange bolts and make equipment connection.
      i. Provide utility connections to equipment shown on Drawings, scheduled or specified.
   2. Plumbing and HVAC equipment:
      a. Make piping connections to plumbing and HVAC equipment, including but not limited to installation of fittings, strainers, pressure reducing valves, flow control valves and relief valves provided with or as integral part of equipment.
      b. Furnish and install sinks, fittings, strainers, pressure reducing valves, flow control valves, pressure relief valves, and shock absorbers which are not specified to be provided with or as integral part of equipment.
      c. For each water supply piping connection to equipment, furnish and install union and gate or angle valve.
         1) Provide wheel handle stop valve at each laboratory sink water supply.
         2) Minimum size to be 1/2 IN.
      d. Furnish and install "P" trap for each waste piping connection to equipment if waste is connected directly to building sewer system.
         1) Size trap as required by IPC.
      e. Stub piping for equipment, sinks, lavatories, supply and drain fittings, key stops, "P" traps, miscellaneous traps and miscellaneous brass through wall or floor and cap and protect until such time when later installation is performed.

N. Provide insulating components where dissimilar metals are joined together.

O. Instrument Connections:
   1. See drawing details.

3.3 CONNECTIONS WITH EXISTING PIPING

A. Where connection between new work and existing work is made, use suitable and proper fittings to suit conditions encountered.

B. Perform connections with existing piping at time and under conditions which will least interfere with service to customers affected by such operation.

C. Undertake connections in fashion which will disturb system as little as possible.

D. Provide suitable equipment and facilities to dewater, drain, and dispose of liquid removed without damage to adjacent property.

E. Where connections to existing systems necessitate employment of past installation methods not currently part of trade practice, utilize necessary special piping components.

F. Where connection involves potable water systems, provide disinfection methods as prescribed in these Specifications.

G. Once tie-in to each existing system is initiated, continue work continuously until tie-in is made and tested.

3.4 ACCESS PROVISIONS

A. Provide access doors or panels in walls, floors, and ceilings to permit access to valves, piping, trap primers, and piping appurtenances requiring service.

B. Size of access panels to allow inspection and removal of items served, minimum 10 x 14 IN size.

C. Fabricate door and frame of minimum 14 GA, stretcher leveled stock, cadmium plated or galvanized after fabrication and fitted with screw driver lock of cam type.

D. Provide with key locks, keyed alike, in public use areas.

E. Furnish panels with prime coat of paint.

F. Style and type as required for material in which door installed.

G. Where door is installed in fire-rated construction, provide door bearing UL label required for condition.

3.5 CATHODIC PROTECTION

A. Isolate, dielectrically, all piping from all other metals including reinforcing bars in concrete slabs, other pipe lines, and miscellaneous metal.

B. Make all connections from wire or cable by Thermit Cadwelding accomplished by operators experienced in this process.

C. Install all cables with a loop and overhead knot around each pipe and slack equal to at least 50 percent of the straight line length.

D. After cadwelding, coat all exposed metallic surfaces with hot applied tape.

3.6 PRESSURE GAGES

A. Provide at locations shown on the Drawings and specified.

B. See Section 11005.

3.7 FIELD QUALITY CONTROL

A. Pipe Testing - General:
   1. Test piping systems as follows:
      a. Test exposed, non-insulated piping systems upon completion of system.

b. Test exposed, insulated piping systems upon completion of system but prior to application of insulation.
c. Test concealed interior piping systems prior to concealment and, if system is insulated, prior to application of insulation.
d. Test buried piping (insulated and non-insulated) prior to backfilling and, if insulated, prior to application of insulation.

2. Utilize pressures, media and pressure test durations as specified on Piping Specification Schedules.
3. Isolate equipment which may be damaged by the specified pressure test conditions.
4. Perform pressure test using calibrated pressure gages and calibrated volumetric measuring equipment to determine leakage rates.
   a. Select each gage so that the specified test pressure falls within the upper half of the gage's range.
   b. Notify the Engineer 24 HRS and Construction Manager 2 HRS prior to each test.
5. Completely assemble and test new piping systems prior to connection to existing pipe systems.
6. Acknowledge satisfactory performance of tests and inspections in writing to Engineer prior to final acceptance.
7. Bear the cost of all testing and inspecting, locating and remedying of leaks and any necessary retesting and re-examination.

B. Pressure Testing:
1. Testing medium: Unless otherwise specified in the Piping Specification Schedules, utilize the following test media.
   a. Process and plant air systems:

PIPE LINE SIZE	SPECIFIED TEST PRESSURE	TESTING MEDIUM
2 IN and smaller	75 psi or less	Air or water
2 IN and smaller	Greater than 75 psi	Water
Greater than 2 IN	3 psi or less	Air or water
Greater than 2 IN	Greater than 3 psi	Water

   b. Laboratory gases and natural gas systems: Cylinder nitrogen.
   c. Liquid systems:

PIPE LINE SIZE (DIA)	GRAVITY OR PUMPED	SPECIFIED TEST PRESSURE	TESTING MEDIUM
Up to and including 48 IN	Gravity	25 psig or less	Air or water
Above 48 IN	Gravity	25 psig or less	Water
All sizes	Pumped	250 psig or less	Water

2. Allowable leakage rates:
   a. Hazardous gas systems, all exposed piping systems, all pressure piping systems and all buried, insulated piping systems which are hydrostatically pressure tested shall have zero leakage at the specified test pressure throughout the duration of the test.
   b. Hydrostatic exfiltration and infiltration for sanitary and stormwater sewers (groundwater level is below the top of pipe):
      1) Leakage rate: 200 GAL per inch diameter per mile of pipe per day at average head on test section of 3 FT.
      2) Average head is defined from groundwater elevation to average pipe crown.
      3) Acceptable test head leakage rate for heads greater than 3 FT: Acceptable leakage rate (gallons per inch diameter per mile per day) = 115 x (actual test head to the 1/2 power).
   c. Hydrostatic infiltration test for sanitary and stormwater sewers (groundwater level is above the top of pipe):

1) Allowable leakage rate: 200 GAL per inch diameter per mile of pipe per day when depth of groundwater over top of pipe is 2 to 6 FT.
2) Leakage rate at heads greater than 6 FT: Allowable leakage rate (gallons per inch diameter per mile of pipe per day) = 82 x (actual head to the 1/2 power).

d. Large diameter (above 48 IN) gravity plant piping systems shall have a maximum exfiltration of 25 gpd per inch-mile.

e. Non-hazardous gas and air systems which are tested with air shall have a maximum pressure drop of 5 percent of the specified test pressure throughout the duration of the test.

f. For low pressure (less than 25 psig) air testing, the acceptable time for loss of 1 psig of air pressure shall be:

PIPE SIZE (IN DIA)	TIME, MINUTES/100 FT
4	0.3
6	0.7
8	1.2
10	1.5
12	1.8
15	2.1
18	2.4
21	3.0
24	3.6
27	4.2
30	4.8
33	5.4
36	6.0
42	7.3
48	7.6

3. Hydrostatic pressure testing methodology:

a. General:

1) All joints, including welds, are to be left exposed for examination during the test.
2) Provide additional temporary supports for piping systems designed for vapor or gas to support the weight of the test water.
3) Provide temporary restraints for expansion joints for additional pressure load under test.
4) Isolate equipment in piping system with rated pressure lower than pipe test pressure.
5) Do not paint or insulate exposed piping until successful performance of pressure test.
6) Mortar lining shall not be tested until mortar has aged 14 days. Do not fill with water until a minimum of 8 hours after the last joint in any section has been made.
7) All air shall be purged from the piping system prior to checking for leaks or performing the pressure testing.
8) All piping systems shall be adequately flushed prior to hydrostatic testing. Flushing should be performed via the flush-out assembly constructed in accordance with the standard details. Velocities should be sufficient to maintain a minimum of 2 fps in the pipeline. Filling/Flushing Rates shall be as follows:

Fill/Flushing Rates for 2 fps Velocity	
PIPE SIZE (IN DIA)	RATE (GPM)
4	80
6	180
8	320
10	490

Fill/Flushing Rates for 2 fps Velocity	
PIPE SIZE (IN DIA)	RATE (GPM)
12	700
16	1250
18	1580
20	1960
24	2820
30	4400
36	6340
42	8640
48	11280
54	15350
60	17620
66	21320

b. Soil, waste, drain and vent systems:
   1) Test at completion of installation of each stack or section of piping by filling system with water and checking joints and fittings for leaks.
   2) Eliminate leaks before proceeding with work or concealing piping.
   3) Minimum test heights shall be 10 FT above highest stack inlet.
c. Larger diameter (above 36 IN) gravity plant piping:
   1) Plug downstream end of segment to be tested.
      a) Provide bracing as required.
   2) Fill segment and upstream structure to normal operating level as per hydraulic profile.
   3) Allow 24 HRS for absorption losses.
      a) Refill to original level.
   4) Provide reservoir to maintain constant head over duration of test.
   5) Record reservoir water volume at beginning and end of test.

4. Natural gas systems - testing methodology:
   a. Maintain specified test pressure until each joint has been thoroughly examined for leaks by means of soap suds and glycerine.
   b. Wipe joints clean after test.
5. Air testing methodology:
   a. General:
      1) Assure air is ambient temperature.
   b. Low pressure air testing:
      1) Place plugs in line and inflate to 25 psig.
      2) Check pneumatic plugs for proper sealing.
      3) Introduce low pressure air into sealed line segment until air pressure reaches 4 psig greater than ground water that may be over the pipe.
         a) Use test gage conforming to ASME B40.100 with 0 to 15 psi scale and accuracy of 1 percent of full range.
      4) Allow 2 minutes for air pressure to stabilize.
      5) After stabilization period (3.5 psig minimum pressure in pipe) discontinue air supply to line segment.
      6) Record pressure at beginning and end of test.

C. Dielectric Testing Methods and Criteria:
   1. Provide electrical check between metallic non-ferrous pipe or appurtenances and ferrous elements of construction to assure discontinuity has been maintained.
   2. Wherever electrical contact is demonstrated by such test, locate the point or points of continuity and correct the condition.

3.8 CLEANING, DISINFECTION AND PURGING

A. Cleaning:
   1. Clean interior of piping systems thoroughly before installing.
   2. Maintain pipe in clean condition during installation.
   3. Before jointing piping, thoroughly clean and wipe joint contact surfaces and then properly dress and make joint.
   4. Immediately prior to pressure testing, clean and remove grease, metal cuttings, dirt, or other foreign materials which may have entered the system.
   5. At completion of work and prior to Final Acceptance, thoroughly clean work installed under these Specifications.
      a. Clean equipment, fixtures, pipe, valves, and fittings of grease, metal cuttings, and sludge which may have accumulated by operation of system, from testing, or from other causes.
      b. Repair any stoppage or discoloration or other damage to parts of building, its finish, or furnishings, due to failure to properly clean piping system, without cost to District.
   6. After erection of piping and tubing, but prior to installation of service outlet valves, blow natural gas and digester gas systems clear of free moisture and foreign matter by means of air, nitrogen or carbon dioxide.
      a. Oxygen shall never be used.
   7. Clean chlorine piping in accordance with CI Pamphlet 6.

B. Disinfection of Potable Water Systems:
   1. After favorable performance of pressure test and prior to Final Acceptance, thoroughly flush entire potable water piping system including supply, source and any appurtenant devices and perform disinfection as prescribed.
   2. Perform work, including preventative measures during construction, in full compliance with AWWA C651.
   3. Perform disinfection using sodium hypochlorite complying with AWWA B300.
   4. Flush each segment of system to provide flushing velocity of not less than 2.5 FT per second.
   5. Drain flushing water to sanitary sewer.
      a. Do not drain flushing water to receiving stream.
   6. Use continuous feed method of application.
      a. Tag system during disinfection procedure to prevent use.
   7. After required contact period, flush system to remove traces of heavily chlorinated water.
   8. After final flushing and before placing water in service, obtain an independent laboratory approved by the District to collect samples and test for bacteriological quality.
      a. Repeat entire disinfection procedures until satisfactory results are obtained.
   9. Secure and deliver to District satisfactory bacteriological reports on samples taken from system.
      a. Ensure sampling and testing procedures are in full compliance to AWWA C651, local water purveyor and applicable requirements of State of California.

C. Purging: Natural gas and digester gas.
   1. Existing piping:
      a. Turn off gas supply.
      b. Vent line pressure outdoors.
      c. If section exceeds the following, then remaining gas shall be displaced with an inert gas.
         1) 50 FT for 2-1/2 IN pipe.
         2) 30 FT for 3 IN pipe.
         3) 15 FT for 4 IN pipe.
         4) 10 FT for 6 IN pipe.
         5) Any length for 8 IN or larger pipe.
   2. New piping:
      a. Including but not limited to:

1) All fuel gas piping.
2) Digesters.
3) Digester gas equipment.
4) Fuel gas trains.

b. Purge air filled system with fuel gas:
1) Providing piping length is less than:
a) 30 FT for 3 IN pipe.
b) 15 FT for 4 IN pipe.
c) 10 FT for 6 IN pipe.
d) Any length for 8 IN and larger pipe.
2) Providing a moderately rapid and continuous flow of fuel gas is introduced.
a) Introduce fuel gas at one (1) end.
b) Vent air at opposite end.
3) Provided fuel gas flow is continuous without interruption until vented gas is free of air.
4) The point of discharge shall not be left unattended during purging.

c. If the piping is 3 IN or larger and exceeds lengths stated above.
1) Purge air with inert gas in accordance with NFPA 54 and NFPA 69.
2) Purge inert gas with fuel gas.

3. Discharge of purged gases:
a. Open end of piping shall not discharge into confined spaces or areas where there are sources of ignition.

3.9 LOCATION OF BURIED OBSTACLES

A. Furnish exact location and description of buried utilities encountered and thrust block placement.

B. Reference items to definitive reference point locations such as found property corners, entrances to buildings, existing structure lines, fire hydrants and related fixed structures.

C. Include such information as location, elevation, coverage, supports and additional pertinent information.

D. Incorporate information on "As-Recorded" Drawings.

3.10 PIPE INSULATION

A. Insulate pipe and pipe fittings in accordance with Section 15183.

3.11 SCHEDULES

System	Service	Fluid Category	Pipe Marker Background Color	Notes on Size, Material, Lining, or Coating	Spec Section	System
A	Aeration Air	Air	Blue	All sizes, stainless steel, no lining	15061	1
BC	Biofilter Circulation	Wastewater	Green	As defined in the system	15061	2
BFE	Biofilter Effluent	Wastewater	Green	Ductile, mechanical joint	15061, 15062	2
CA	Compressed Air	Air	Blue	As defined in System	15063	10
CD	Chemical Drain	Drain/Vent	Yellow	As defined in System	15064	21
CS	Circulating Sludge	Sludge	Green	As defined in System	15061, 15062	3
CW	Cold Water	Water	Red	As defined in System	15061, 15062 15063	11
D	Drain	Drain/Vent	Green	As defined in System	15061, 15062, 15064	22
DS	Digested Sludge	Sludge	Green	As defined in System	15061, 15062	3
EE	Engine Exhaust	Exhaust Air	Yellow	As defined in System	15061	1

System	Service	Fluid Category	Pipe Marker Background Color	Notes on Size, Material, Lining, or Coating	Spec Section	System
FA	Foul Air	Foul Air	Yellow	As defined in System	15890	18
HRR	Heating Reservoir Return	Water	Red	As defined in System	15061	23
HRS	Heating Reservoir Supply	Water	Red	As defined in System	15061	23
HS	Harvested Sludge	Sludge	Green	As defined in System	15064	16
HW	Potable Hot Water	Water	Red	As defined in System	15061, 15062 15063	11
IA	Instrument Air	Air	Blue	As defined in System	15063	10
MSG	Medium Pressure Sludge Gas	Gas	Yellow	As defined in System	15061, 15064	9
ML	Mixed Liquor	Sludge	Green	As defined in System, cement lined	15061, 15062	2
NG	Natural Gas	Gas	Yellow	All sizes, black steel	15061	5
OF	Overflow	Wastewater	Green	As defined in System	15061, 15062	2
PD	Pumped Drainage	Wastewater	Green	As defined in System	15061, 15062 15064	6
PE	Primary Effluent	Wastewater	Green	As defined in System	15061, 15062	2
POLY	Polymer	Chemical	Yellow	All sizes, PVC	15064	8
PS	Primary Sludge	Sludge/Scum	Green	As defined in System, glass lined Ductile Iron	15061, 15062	4
RO	Roof Overflow	Waste	Green	As defined in System	15061, 15062, 15064, 15073	22
RL	Rain Leader	Waste	Green	As defined in System	15061, 15062, 15064, 15073	22
RSS	Return Secondary Sludge	Sludge	Green	As defined in System, cement lined	15061, 15062	2
SA	Service Air	Air	Blue	As defined in System	15063	10
SD	Sanitary Drain	Drain/Vent	Green	As defined in System	15061, 15062, 15064	22
SE	Secondary Effluent	Wastewater	Green	As defined in System, cement lined	15061, 15062	2
SN	Supernatant	Sludge	Green	As defined in System, cement lined	15061, 15062	3
SSC	Secondary Scum	Sludge/Scum	Green	As defined in System, Glass lined	15061, 15062	4
STD	Storm Drain	Drain/Vent	Green	As defined in System, Glass lined	15061, 15062, 15064	22
TD	Tank Drain	Wastewater	Green	As defined in System	15061, 15062 15064	6
TS	Transfer Sludge	Sludge	Green	As defined in System, cement lined	15061, 15062	2
TWSS	Thickened Waste Secondary Sludge	Sludge	Green	As defined in System, cement lined	15061, 15062	4
V	Vent	Drain/Vent	Yellow	As defined in System	15061, 15062, 15064, 15073	22
VC	Chemical Vent	Drain/Vent	Yellow	As defined in System	15064	21
W	Waste	Waste	Green	As defined in System	15061, 15062,	22

System	Service	Fluid Category	Pipe Marker Background Color	Notes on Size, Material, Lining, or Coating	Spec Section	System
					15064, 15073	
WW	Wastewater	Wastewater	Green	As defined in System	15061, 15062 15064	6
WSS	Waste Secondary Sludge	Sludge	Green	As defined in System, cement lined	15061, 15062	2
1W	Potable Water (City Water)	Water	Red	All sizes, PVC	15064	7
1WS	Potable Water Soft	Water	Red	All sizes, PVC	15064	7
2W	Non-Potable City Water	Water	Red	All sizes, PVC	15064	7
3W	No.3Water (secondary effluent)	Water	Red	All sizes, PVC	15064	7

A. SPECIFICATION SCHEDULE - SYSTEM 1

1. General:
   a. Piping symbol and service:
      1) AA – Aeration Air
      2) EE – Engine Exhaust
   b. Test requirements:
      1) Test medium: Low pressure air.
      2) Pressure: 20 psig.
      3) Duration: 120 Minutes.
   c. Gaskets:
      1) Flanged, Rubber, AWWA/ANSI C111/A21.11.
      2) Grooved coupling joints: Rubber, AWWA C606.
      3) Flanged joints (steel): AWWA C207.
2. System components:
   a. Exposed service:
      1) Pipe size 3 IN through 12 IN:
         a) Materials: 304 L Stainless steel, Schedule 40.
         b) Reference: ASTM A312.
         c) Lining: None.
         d) Coating: None.
         e) Fittings: ASTM A403.
         f) Joints: Butt welded, grooved mechanical coupling or ASTM A182 stainless steel flanged.
      2) Pipe size 14 IN and larger:
         a) Material: 304 L Stainless steel, Schedule 10.
         b) Reference: ASTM A312.
         c) Lining: None.
         d) Coating: None.
         e) Fittings: ASTM A403.
         f) Joints: Butt welded, grooved mechanical coupling or ASTM A182 stainless steel flanged.
   b. Buried or encased service:
      1) Pipe size 3 IN through 12 IN:
         a) Materials: 304 L Stainless steel, Schedule 40 with polyethylene tape coating. Field application of coating to all couplings.
         b) Reference: ASTM A312.
         c) Lining: None.

d) Coating: None.
e) Fittings: ASTM A403.
f) Joints: Butt welded, grooved mechanical coupling or ASTM A182 stainless steel flanged.

2) Pipe size 14 IN and larger:
a) Materials: 304 L Stainless steel, Schedule 10 with polyethylene tape coating. Field application of coating to all couplings.
b) Reference: ASTM A312.
c) Lining: None.
d) Coating: None.
e) Fittings: ASTM A403.
f) Joints: Butt welded, grooved mechanical coupling or ASTM A182 stainless steel flanged.

B. SPECIFICATION SCHEDULE - SYSTEM 2

1. General:
a. Piping symbol and service:
1) BC – Biofilter Circulation
2) BFE – Biofilter Effluent
3) ML– Mixed Liquid
4) OF– Over Flow
5) PE– Primary Effluent
6) RSS– Return Secondary Sludge
7) SE– Secondary Effluent
8) TS– Transfer Sludge
9) WSS– Waste Secondary Sludge
b. Test requirements:
1) Test medium: Water.
2) Pressure: 75 psig.
3) Duration: 120 Minutes.
c. Gaskets:
1) Flanged, push-on and mechanical joints (ductile iron): Rubber, AWWA/ANSI C111/A21.11.
2) Grooved coupling joints (ductile and steel): Rubber, AWWA C606.
3) Flanged joints (steel): AWWA C207.

2. System components:
a. Exposed service:
1) Pipe size 4 IN through 8 IN:
a) Material: Steel, A106 Grade B Schedule 40.
b) Reference: ASTM A106/A106M-08.
c) Lining: None.
d) Coating: Protective Coating per Section 09905.
e) Fittings: Either AWWA/ANSI C110/A21.10 ductile or gray iron or AWWA C208 steel, ends to match pipe.
f) Joints: Butt welded, grooved mechanical coupling or AWWA C207 steel flanged.

2) Pipe size 10 IN through 24 IN:
a) Material: Steel, A106 Grade B Schedule 40.
b) Reference: ASTM A106/A106M-08.
c) Lining: Cement mortar per Section 15061.
d) Coating: Protective Coating per Section 09905.
e) Fittings: Steel ASTM A234, or fabricated steel, AWWA C208,lining and ends to match pipe.
f) Joints: Butt welded, grooved mechanical coupling or AWWA C207 steel flanged.

3) Pipe size 26 IN and larger:

a) Material: Steel, AWWA C200.
b) Reference: AWWA C200-05.
c) Lining: Cement mortar per Section 15061.
d) Coating: Protective Coating per Section 09905.
e) Fittings: Fabricated steel, AWWA C208, lining and ends to match pipe.
f) Joints: Mechanical pipe coupling flanged, plain end butt welded or slip joint fillet welded.

b. Buried or encased service:
1) Pipe size 4 IN through 12 IN:
a) Material: Ductile iron, Class 53, standard lining and coating. Reference Spec Section 15062.
b) Reference: AWWA/ANSI C151/A21.51.
c) Fittings: Ductile or gray iron, AWWA C110 coating, lining and ends to match pipe.
d) Joints: Mechanical or push-on rubber gasket joint. Flanged adaptor for valves.
2) Pipe size 14 IN and larger:
a) Material: Cement Mortar lined and coated steel. Reference Spec Section 15060.
b) Reference: AWWA C200.
c) Lining: Cement mortar per Section 15061.
d) Coating: Cement mortar per Section 15061.
e) Fittings: AWWA C208.
f) Joints: Butt welded; slip joint fillet welded, or restrained sleeve coupling as indicated on the drawings.

C. SPECIFICATION SCHEDULE - SYSTEM 3

1. General:
a. Piping symbol and service:
1) CS – Circulating Sludge
2) DS – Digested Sludge
3) SN – Supernatant
b. Test requirements:
1) Test medium: Water.
2) Pressure: 100 psig.
3) Duration: 120 Minutes.
c. Gaskets:
1) Flanged, push-on and mechanical joints (ductile iron): Rubber, AWWA/ANSI C111/A21.11.
2) Grooved coupling joints (ductile and steel): Rubber, AWWA C606.
3) Flanged joints (steel): AWWA C207.
2. System components:
a. Exposed service:
1) Pipe size 4 IN through 8 IN:
a) Material: Steel, A106 Grade B Schedule 40.
b) Reference: ASTM A106/A106M-08.
c) Lining: None.
d) Coating: Protective Coating per Section 09905.
e) Fittings: Either AWWA/ANSI C110/A21.10 ductile or gray iron or AWWA C208 steel, ends to match pipe.
f) Joints: Butt welded, grooved mechanical coupling or AWWA C207 steel flanged.
2) Pipe size 10 IN and larger:
a) Material: Steel, A106 Grade B Schedule 40.
b) Reference: ASTM A106/A106M-08.
c) Lining: Cement mortar per Section 15061.

d) Coating: Protective Coating per Section 09905.
e) Fittings: Steel ASTM A234, or fabricated steel, AWWA C208,lining and ends to match pipe.
f) Joints: Butt welded, grooved mechanical coupling or AWWA C207 steel flanged.

b. Buried or encased service:
1) Pipe size 4 IN through 12 IN:
a) Material: Ductile iron, Class 53, standard lining and coating. Reference Spec Section 15062.
b) Reference: AWWA/ANSI C151/A21.51.
c) Fittings: Ductile or gray iron, AWWA C110 coating, lining and ends to match pipe.
d) Joints: Mechanical or push-on rubber gasket joint. Flanged adaptor for valves.
2) Pipe size 14 IN and larger:
a) Material: Cement Mortar lined and coated steel. Reference Spec Section 15060.
b) Reference: AWWA C200.
c) Lining: Cement mortar per Section 15061.
d) Coating: Cement mortar per Section 15061.
e) Fittings: AWWA C208.
f) Joints: Butt welded; slip joint fillet welded, or restrained sleeve coupling as indicated on the drawings.

D. SPECIFICATION SCHEDULE - SYSTEM 4

1. General:
a. Piping symbol and service:
1) PS– Primary Sludge
2) SSC – Secondary Scum
3) TWSS – Thickened Waste Secondary Sludge
b. Test requirements:
1) Test medium: Water.
2) Pressure: 200 psig.
3) Duration: 120 Minutes.
c. Gaskets:
1) Flanged, push-on and mechanical joints (ductile iron): Rubber, AWWA/ANSI C111/A21.11.
2) Grooved coupling joints (ductile and steel): Rubber, AWWA C606.
3) Flanged joints (steel): AWWA C207.

2. System components:
a. Exposed service:
1) Pipe size 4 IN through 12 IN:
a) Material: Steel, A106 Grade B Schedule 40.
b) Reference: ASTM A106/A106M-08.
c) Lining: Glass lining.
d) Coating: Protective Coating per Section 09905.
e) Fittings: Either AWWA/ANSI C110/A21.10 ductile or gray iron or AWWA C208 steel, ends to match pipe.
f) Joints: Butt welded, grooved mechanical coupling or ASTM A182 stainless steel flanged.
b. Buried or encased service:
1) Pipe size 4 IN through 12 IN:
a) Material: Ductile iron, Class 53, glass lining and coating. Reference Spec Section 15062.
b) Reference: AWWA/ANSI C151/A21.51.

c) Fittings: Ductile or gray iron, AWWA C110 coating, lining and ends to match pipe.
d) Joints: Mechanical or push-on rubber gasket joint. Flanged adaptor for valves.

E. SPECIFICATION SCHEDULE - SYSTEM 5

1. General:
   a. Piping symbol and service:
      a) NG - Natural Gas.
   b. Test requirements:
      1) Test medium: Cylinder Nitrogen.
      2) Pressure: 200 psig.
      3) Duration: 120 minutes.
2. System components:
   a. Exposed service:
      1) 2” and smaller:
         a) Material: Steel, Grade B, black, seamless Sch 40.
         b) Reference: ASTM A53.
         c) Lining: None.
         d) Coating: Paint.
         e) Fittings: Malleable iron meeting ASTM A197, ASME B16.3, Class 150, ends to match pipe.
         f) Joints: Taper threaded, ASME B16.9 steel butt- or socket-welded joints.
      2) 2-1/2” through 8”:
         a) Material: Steel, Grade B, black, seamless Sch 40.
         b) Reference: ASTM A53.
         c) Lining: None.
         d) Coating: Paint.
         e) Fittings: ASME A234, seamless steel, AMSI B19.9, Sch. 40, ends to match pipe.
         f) Joints: Butt weld, flanged for valve.
   b. Buried or encased service:
      1) 2” and smaller:
         a) Material: Steel, Grade B, black, seamless Sch 40 with polyethylene tape coating. Field application of coating to all couplings. Provide plastic tracer tape.
         b) Reference: ASTM A53.
         c) Fittings: Malleable iron meeting ASTM A197, ASME B16.3, Class 150, ends to match pipe.
         d) Joints: Taper threaded, ASME B16.9 steel butt- or socket-welded joints.
      2) 2-1/2” through 8”:
         a) Material: Steel, Grade B, black, seamless Sch 40 with polyethylene tape coating. Field application of coating to all couplings. Provide plastic tracer tape.
         b) Reference: ASTM A53.
         c) Lining: None.
         d) Coating: Paint.
         e) Fittings: ASME A234, seamless steel, AMSI B19.9, Sch. 40, ends to match pipe.
         f) Joints: Butt weld, flanged for valve.

3. Natural Gas Piping Installation:
   a. Install piping in accordance with NFPA, local gas company regulations, codes and local ordinances, complete with necessary appurtenances.
   b. Install buried pipe at approximately 30 IN deep.
   c. Gas cocks:

1) Install before gas utilization equipment connected to system, at each branch main and at connection to meter.
2) Design to operate safely under pressures indicated.
3) Install ground joint unions at intervals to facilitate repairs.
4) Cocks shall be of type and lubricant recommended by manufacturer for this class of service, and as approved by local gas company.

d. Pipe drainage:
1) Drain horizontal piping to risers.
2) Locate drains where required for system drainage.
3) Install tee fitting with bottom outlet plugged or provide with threaded, capped nipple at bottom of risers or in accordance with applicable codes.

e. Make piping connections with shellacked joints or ground joint unions.

f. Provide vents from gas regulators, pressure reducing valves, and other vented devices to the outdoors and terminate in accordance with applicable codes.

g. Connect piping to pressure reducing valve outside each building as shown on drawings and schedule.

h. Provide flexible connections to vibration isolated equipment suitable for pressures, local and national codes and intended application.

i. Remove cutting and threading burrs.

j. Plug each gas outlet (including valves) with threaded plugs or caps immediately after installation and retain until the piping or equipment connections are completed.

k. Continuously ground gas piping electrically, bond tightly to the grounding connection.

l. Install piping parallel to other piping, but maintain a minimum 12 IN clearance between gas piping and any piping that could reach 200 DegF.

m. All gas piping in air plenums to be all-welded and encased in a Schedule 40 pipe sleeve.
1) Ends of the sleeve open to atmosphere or sealed with the annulus vented (gas pipe size) to atmosphere.

F. SPECIFICATION SCHEDULE - SYSTEM 6

1. General:

a. Piping symbol and service:
1) PS – Pumped Sludge
2) TD – Tank Drain
3) WW – Wastewater

b. Test requirements:
1) Test medium: Water.
2) Pressure: 125 psig.
3) Duration: 120 Minutes.

c. Gaskets:
1) Flanged, push-on and mechanical joints (ductile iron): Rubber, AWWA/ANSI C111/A21.11.
2) Grooved coupling joints (ductile and steel): Rubber, AWWA C606.
3) Flanged joints (steel): AWWA C207.

2. System components:

a. Exposed service:
1) Pipe 3IN and smaller:
a) Material: PVC, Schedule 80. Pipe and Fitting exposed to sunlight shall be CPVC. Reference to Spec Section 15064.
b) Reference: ASTM D1785.
c) Lining: None.
d) Coating: Protective coating per Section 09905.
e) Fittings: Solvent welded socket type complying with ASTM F439.
f) Joints: Plain end; solvent weld with threaded or flanged adaptor for valves.

2) Pipe size 4 IN through 8 IN:
   a) Material: Steel, A106 Grade B Schedule 40.
   b) Reference: ASTM A106/A106M-08.
   c) Lining: None.
   d) Coating: Protective Coating per Section 09905.
   e) Fittings: Either AWWA/ANSI C110/A21.10 ductile or gray iron or AWWA C208 steel; ends to match pipe.
   f) Joints: Butt welded, grooved mechanical coupling or AWWA C207 steel flanged.
3) Pipe size 10 IN through 24 IN:
   a) Material: Steel, A106 Grade B Schedule 40.
   b) Reference: ASTM A106/A106M-08.
   c) Lining: Cement mortar per Section 15061.
   d) Coating: Protective Coating per Section 09905.
   e) Fittings: Steel ASTM A234, or fabricated steel, AWWA C208,lining and ends to match pipe.
   f) Joints: Butt welded, grooved mechanical coupling or AWWA C207 steel flanged.
4) Pipe size 26 IN and larger:
   a) Material: Steel, AWWA C200.
   b) Reference: AWWA C200-05.
   c) Lining: Cement mortar per Section 15061.
   d) Coating: Protective Coating per Section 09905.
   e) Fittings: Fabricated steel, AWWA C208, lining and ends to match pipe.
   f) Joints: Mechanical pipe coupling flanged, plain end butt welded or slip joint fillet welded.

b. Buried or encased service:
1) Pipe 3 IN and smaller:
   a) Material: PVC, Schedule 80 with magnetic tracer tape.
   b) Reference: ASTM D1785.
   c) Lining: None.
   d) Coating: Protective coating per Section 09905.
   e) Fittings: Solvent welded socket type complying with ASTM F439.
   f) Joints: Plain end; solvent weld with threaded or flanged adaptor for valves.
2) Pipe size 4 IN through 12 IN:
   a) Material: Ductile iron, Class 53, standard lining and coating. Reference Spec Section 15062.
   b) Reference: AWWA/ANSI C151/A21.51.
   c) Fittings: Ductile or gray iron, AWWA C110 coating, lining and ends to match pipe.
   d) Joints: Mechanical or push-on rubber gasket joint. Flanged adaptor for valves.
3) Pipe size 14 IN and larger:
   a) Material: Cement Mortar lined and coated steel. Reference Spec Section 15060.
   b) Reference: AWWA C200.
   c) Lining: Cement mortar per Section 15061.
   d) Coating: Cement mortar per Section 15061.
   e) Fittings: AWWA C208.
   f) Joints: Butt welded; slip joint fillet welded, or restrained sleeve coupling as indicated on the drawings.

G. SPECIFICATION SCHEDULE - SYSTEM 7

1. General:
   a. Piping symbol and service:
      1) 1W-Potable Water (City Water)
      2) 1WS-Non Potable Water Soft

3) 2W – Non-Potable City Water
4) 3W – No. 3 Water.

b. Test requirements pressure lines:
1) Test medium: Water.
2) Pressure: 200 psig.
3) Duration: 120 minutes.

c. Gaskets and O-rings: Polypropylene.

2. System components:
a. Exposed service:
1) All size pipe:
a) Material: PVC,ASTM D1784, Class 12454-B, NSF certified, ASTM D 1785, Sch 80. Pipe and Fitting exposed to sunlight shall be CPVC. Reference to Spec Section 15064.
b) Reference: ASTM D1785.
c) Fittings: PVC, Sch 80, solvent welded.
d) Joints: Plain end; solvent weld with threaded or flanged adaptor for valves 2-1/2" and larger.

b. Buried or encased service:
1) All size pipe:
a) Material: PVC,ASTM D1784, Class 12454-B, NSF certified, ASTM D 1785, Sch 80 with magnetic tracer tape. Reference to Spec Section 15064.
b) Reference: ASTM D1785.
c) Fittings: PVC, Sch 80, solvent welded.
d) Joints: Plain end; solvent weld with threaded or flanged adaptor for valves 2-1/2" and larger.

H. SPECIFICATION SCHEDULE - SYSTEM 8

1. General:
a. Piping symbol and service:
1) Poly – Polymer.

b. Test requirements:
1) Test medium: Water.
2) Pressure: 225 psig.
3) Duration: 120 minutes.

c. Gaskets and O-rings: Polypropylene.

2. System components:
a. Exposed service:
1) All size pipe:
a) Material: PVC,ASTM D1784, Class 12454-B, NSF certified, ASTM D 1785, Sch 80. Pipe and Fitting exposed to sunlight shall be CPVC. Reference to Spec Section 15064.
b) Reference: ASTM D1785.
c) Fittings: PVC, Sch 80, solvent welded.
d) Joints: Plain end; solvent weld with threaded or flanged adaptor for valves 2-1/2" and larger.

b. Buried or encased service:
1) All size pipe:
a) Material: PVC,ASTM D1784, Class 12454-B, NSF certified, ASTM D 1785, Sch 80 with magnetic tracer tape. Reference to Spec Section 15064.
b) Reference: ASTM D1785.
c) Fittings: PVC, Sch 80, solvent welded.
d) Joints: Plain end; solvent weld with threaded or flanged adaptor for valves 2-1/2" and larger.

I. SPECIFICATION SCHEDULE - SYSTEM 9

1. General:

a. Piping symbol and service:
    a) MSG – Medium Pressure Sludge Gas.
b. Test requirements:
    1) Test medium: Air.
    2) Pressure: 20 psig.
    3) Duration: 120 minutes.

2. System components:
a. Exposed service:
    1) 2” and smaller:
        a) Material: Steel, Grade B, black, Schedule 40.
        b) Reference: ASTM A53.
        c) Lining: None.
        d) Coating: Paint.
        e) Fittings: Malleable iron meeting ASTM A197, ASME B16.3, Class 150, ends to match pipe.
        f) Joints: Taper threaded, ASME B16.9 steel butt- or socket-welded joints.
    2) 2-1/2” through 8”:
        a) Material: Steel, Grade B, black, Schedule 40.
        b) Reference: ASTM A53.
        c) Lining: None.
        d) Coating: Paint.
        e) Fittings: ASME A234, seamless steel, AMSI B19.9, Sch. 40, ends to match pipe.
        f) Joints: Butt weld, flanged for valve.
b. Buried or encased service:
    1) 2 IN through 6 IN:
        a) Material: Polyethylene: ASTM D 1248, type III, grade 3, Class C, SDR-11. Reference Spec Section 15064. Provide magnetic tracer tape.
        b) Fittings: Polyethylene, molded; ends and SDR to match pipe.
        c) Joints: Thermal socket fusion or butt-fusion welded with flanged adaptor for valves.
    2) 8 IN and larger
        a) Material: Polyethylene: ASTM D 1248, type III, grade 3, Class C, SDR-13.5. Reference Spec Section 15064. Provide magnetic tracer tape.
        b) Fittings: Polyethylene, fabricated; ends and SDR to match pipe.
        c) Joints: Thermal butt-fusion welded with flanged adaptor for valves.

J. SPECIFICATION SCHEDULE - SYSTEM 10

1. General:
a. Piping symbol and service:
    1) CA – Compressed Air.
    2) IA – Instrument Air.
    3) SA – Service Air.
b. Test requirements:
    1) Test medium: Air.
    2) Pressure: 150 psig.
    3) Duration: 120 Minutes
c. Gaskets and O-rings:
    1) O-rings: Neoprene or rubber.
    2) Flanged: Rubber, AWWA/ANSI C111/A21.11.
    3) Flanged joints (steel): Rubber, AWWA C207.

2. System components:
a. Exposed service:
    1) Pipe size 1/2 IN and smaller:
        a) Material: Copper tubing, Type L. Spec Section 15063.

b) Reference: ASTM B88.
c) Lining: None.
d) Fittings: Wrought copper or bronze fittings meeting ASME B16.22.
e) Joints: Brass compression type.

2) Pipe size 3/4 IN through 2 IN:
a) Material: Copper tubing, Type L. Spec Section 15063.
b) Reference: ASTM B88.
c) Lining: None.
d) Fittings: Wrought copper or bronze fittings meeting ASME B16.22.
e) Joints: Solder type with threaded adaptors for valves.

3) Pipe size 2-1/2 IN through 6 IN:
a) Material: Steel, A106 Grade B Schedule 40.
b) Reference: ASTM A106/A106M-08.
c) Lining: None.
d) Coating: Protective Coating per Section 09905.
e) Fittings: Steel, ASTM A234.
f) Joints: Butt welded or AWWA C207 steel flanged.

b. Buried or encased service:

1) Pipe size 2 IN or smaller:
a) Material: Copper tubing, Type K, annealed or drawn.
b) Reference: ASTM B88.
c) Lining: None.
d) Fittings: Wrought copper or bronze fittings meeting ASME B16.22.
e) Joints: Solder type.

2) Pipe size 2-1/2 IN through 6 IN:
a) Material: Steel, A106 Grade B Schedule 40 with polyethylene tape coating. Field application of coating to all coupling. Reference Spec Section 15061.
b) Reference: ASTM A106/A106M-08.
c) Lining: None.
d) Fittings: Steel, ASTM A234.
e) Joint, butt weld, flanged for valve.

Remark: Piping between compressors and aftercoolers shall be insulated. Service air piping between compressor and aftercooler shall be galvanized steel. Utility station risers for service air piping shall be galvanized steel. Dielectric isolation shall be provided between galvanized and cooper piping. Lateral connections shall be made in the top half of the main line. Provide drip legs valves at low points in the piping system.

K. SPECIFICATION SCHEDULE - SYSTEM 11

1. General:

a. Piping symbol and service:

1) HW – Potable Hot Water
2) CW – Cold Water.

b. Test requirements pressure lines:

1) Test medium: Water.
2) Pressure: 150 psig.
3) Duration: 60 minutes.

c. Gaskets and O-rings:

1) Flange: Neoprene, C.I.
2) Push-on/Mechanical Coupling: Neoprene.

2. System components:

a. Exposed service:

1) Pipe size 3 IN and smaller:
a) Material: Copper tubing, Type L drawn. Spec Section 15063.
b) Reference: ASTM B88.
c) Lining: None.
d) Fittings: Wrought copper or bronze fittings meeting ASME B16.22.

e) Joints: Solder type with threaded or flanged adaptor for valves.

2) Pipe size 4 IN and larger:

a) Material: Steel, A106 Grade B Schedule 40.

b) Reference: ASTM A106/A106M-08.

c) Lining: None.

d) Coating: Protective Coating per Section 09905.

e) Fittings: malleable iron, ASTM A47; ductile iron, ASTM A536; or steel, ASTM A234; ends to match pipe.

f) Joints: Butt welded, grooved mechanical pipe coupling or AWWA C207 steel flanged.

b. Buried or encased service:

1) Pipe size 3 IN or smaller:

a) Material: Copper tubing, Type K, annealed or drawn.

b) Reference: ASTM B88.

c) Lining: None.

d) Fittings: Wrought copper or bronze fittings meeting ASME B16.22.

e) Joints: Solder type, with threaded or flanged adaptors for valve.

2) Pipe size 4 IN and larger:

a) Material: Ductile iron, Class 51,with cement lining and standard coating. Reference Spec Section 15062.

b) Reference: AWWA/ANSI C151/A21.51.

c) Fittings: Ductile or gray iron, AWWA C110 coating, lining and ends to match pipe.

d) Joints: Mechanical or push-on rubber gasket joint. Flanged adaptor for valves.

Remark: Exposed HW piping shall be insulated. Buried HW piping shall be placed in insulated conduit.

L. SPECIFICATION SCHEDULE - SYSTEM 12- NOT USED

M. SPECIFICATION SCHEDULE - SYSTEM 13 – NOT USED

N. SPECIFICATION SCHEDULE - SYSTEM 14 – NOT USED

O. SPECIFICATION SCHEDULE - SYSTEM 15 – NOT USED

P. SPECIFICATION SCHEDULE - SYSTEM 16

1. General:

a. Piping symbol and service:

1) HS – Harvest Sludge

b. Test requirements:

1) Test medium: Water

2) Pressure: 100 psig at 80 degree F.

3) Duration: 120 minutes

2. System components:

a. Exposed and buried service

1) All pipe Size

a) Polyethylene: ASTM D 1248, type III, grade 3, Class C, SDR-15.5. Reference Spec Section 15064.

b) Joints: Butt fusion.

Q. SPECIFICATION SCHEDULE - SYSTEM 17- NOT USED

R. SPECIFICATION SCHEDULE - SYSTEM 18

1. General:

a. Test requirements:

1) Test medium: Air.

2) Pressure: 10 psig

3) Duration: 180 minutes.

2. System components:
   a. Pipe size 6 through 63 IN:
      1) Exposed service: FRP. See Section 15890
      2) Buried Service:
         a) Material: HDPE, SDR 32.5.
         b) Reference: ASTM D3350.
         c) Lining: None.
         d) Coating: None.
         e) Fittings: ASTM D3261 butt fittings.
         f) Joints: Butt fusion.

S. SPECIFICATION SCHEDULE – SYSTEM 19- NOT USED

T. SPECIFICATION SCHEDULE - SYSTEM 20- NOT USED

U. SPECIFICATION SCHEDULE - SYSTEM 21

1. General:
   a. Piping symbol and service:
      1) CD – Chemical Drain.
      2) VC – Chemical Vent.
   b. Test requirements:
      1) Test medium: In accordance with Uniform Pluming Code.
      2) Pressure: In accordance with Uniform Pluming Code.
      3) Duration: In accordance with Uniform Pluming Code.
   c. Gaskets: N/A.
2. System components:
   a. Exposed Service:
      1) All pipe Size
         a) Material: PVC; ASTM D 1784, Class 12454-B, NSF certified, ASTM D1785, Sch. 80. Ref. Spec Section 15064.
         b) Fittings: PVC, Sch 80, sochet type.
         c) Joints: Plain end, solvent weld.
   b. Buried and encased Service:
      1) All pipe Size
         a) Material: PVC; ASTM D 1784, Class 12454-B, NSF certified, ASTM D1785, Sch. 80. Ref. Spec Section 15064. Provide magnetic tracer tape.
         b) Fittings: PVC, Sch 80, socket type.
         c) Joints: Plain end, solvent weld.

V. SPECIFICATION SCHEDULE - SYSTEM 22

1. General:
   a. Piping symbol and service:
      1) D – Drain.
      2) SD – Sanitary Drain.
      3) STD – Strom Drain.
      4) V – Vent.
      5) W – Waste.
      6) RL – Rain Leader.
      7) RO – Roof Overflow.
   b. Test requirements:
      1) Test medium: In accordance with Uniform Pluming Code.
      2) Pressure: In accordance with Uniform Pluming Code.
      3) Duration: In accordance with Uniform Pluming Code.
   c. Gaskets:
      1) Flange: Neoprene, C.I
      2) Push –on/Mechanical Coupling: Neoprene.
2. System components:

a. Exposed Service:
1) 3 IN and smaller:
a) Material: Steel; ASTM A120, Sch. 40, galvanized. Spec Section 15061.
b) Fittings: Malleable Iron, ASTM A197, ANSI B 16.3, Class 150, galvanized..
c) Joints: Taper threaded, ANSI B2.1.
2) 4 IN through 12 IN:
a) Material: Cast iron soil pipe (CISP): ASTM A74.
b) Fittings: ISP, ASTM A74, joint options to match pipe.
c) Joints: Service hub and spigot compression type or hubless cast iron sanitary system per CISPI 301.
3) 14 IN and larger:
a) Material: Ductile iron, Class 53, standard lining and coating. Reference Spec Section 15062.
b) Reference: AWWA/ANSI C151/A21.51.
c) Fittings: Ductile or gray iron, AWWA C110 coating, lining and ends to match pipe.
d) Joint: Flanged or AWWA C111 mechanical.
b. Buried or encased Service:
1) 3 IN and smaller:
a) Material: PVC; ASTM D 1784, Class 12454-B, NSF certified, ASTM D1785, Sch. 80. Ref. Spec Section 15064. Provide magnetic tracer tape.
b) Fittings: PVC, Sch 80, socket type.
c) Joints: Plain end, solvent weld.
2) 4 IN through 12 IN:
a) Material: PVC; ASTM D D3034, SDR 35. Provide magnetic tracer tape.
b) Fittings: PVC or IPS cast iron, end to match pipe.
c) Joints: Push on with nitrite gasket.
3) 14 IN and larger:
a) Reinforced concrete pipe (RCP)
b) Reference: ASTM C76-84.
c) Fittings: Concrete manhole as specified on the drawings.
d) Joint: ASTM C443, rubber gasket type.

W. **SPECIFICATION SCHEDULE - SYSTEM 23**
1. General:
a. Piping symbol and service:
1) HRR – Heating Reservoir Return.
2) HRS – Heating Reservoir Supply.
b. Test requirements:
1) Test medium: Water.
2) Pressure: 125 psig.
3) Duration: 6 HRS.
c. Gaskets and O-rings: EPDM.
2. System components:
a. Pipe size through 26 IN:
1) Exposed service:
a) Material:
(1) Threaded: Steel, Grade B, black, Schedule 40.
(2) Grooved type joint system: Use pipe thickness per AWWA C606.
b) Reference: ASTM A53.
c) Lining: None.
d) Coating: Paint.
e) Fittings: Malleable iron or steel meeting ASME B16.3 and ASTM A234.
f) Joints:
(1) Threaded or grooved type mechanical coupling (AWWA C606) joints.

(2) With both systems, provide rigid flanges at equipment, valves and structure penetrations above 2 IN and unions at those locations 2 IN and below.

2) Buried service:
   a) Materials: Steel, Schedule 40, Grade B, black.
   b) Reference: ASTM A53.
   c) Lining: None.
   d) Coating: Bituminous.
   e) Fittings: Malleable iron or steel meeting ASME B16.3, ASTM A234.
   f) Joints: Threaded.

END OF SECTION

GOLETA SANITARY DISTRICT

CONTRACT DOCUMENTS FOR
WASTEWATER TREATMENT PLANT UPGRADING

GOLETA, CALIFORNIA

NOVEMBER 2010

APPROVED BY:

GOLETA SANITARY DISTRICT

KAMIL S. AZOURY DATE
GENERAL MANAGER

SUBMITTED BY:

HDR ENGINEERING, INC.

GUILLERMO GARCIA R.C.E. 31682 EXP. 12/31/10 DATE
PROJECT MANAGER

HDR
HDR Engineering, Inc.

GOLETA SANITARY DISTRICT

WASTEWATER TREATMENT PLANT UPGRADING

INDEX OF DRAWINGS

SHEET. NO.	DWG. NO.	DESCRIPTION
		GENERAL
1	G0A	COVER SHEET
2	G0B	INDEX OF DRAWINGS
3	G001	LOCATION AND VICINITY MAP
4	G002	SYMBOLS, ABBREVIATIONS, AND EQUIPMENT PREFIXES
5	G003	DESIGN DATA
6	G004	PLANT FLOW DIAGRAM – LIQUIDS
7	G005	PLANT FLOW DIAGRAM – SOLIDS
8	G006	HYDRAULIC PROFILE – I
9	G007	HYDRAULIC PROFILE – II
10	G008	HYDRAULIC PROFILE – III
11	G009	SITE PLAN AND DRAWING NUMBERING SYSTEM
12	G010	SANTA BARBARA COUNTY PERMIT CONDITIONS
13	G011	SANTA BARBARA COUNTY PERMIT CONDITIONS
14	G012	SANTA BARBARA COUNTY PERMIT CONDITIONS
15	G013	SANTA BARBARA COUNTY PERMIT CONDITIONS
		CIVIL
16	C001	PLANT LAYOUT AND SURVEY CONTROL
17	C002	KEY MAP
18	C003	PAVING AND GRADING PLAN I
19	C004	PAVING AND GRADING PLAN II
20	C005	PAVING AND GRADING PLAN III
21	C006	PAVING AND GRADING PLAN IV
22	C007	YARD PIPING PLAN I
23	C007A	YARD PIPING PLAN I–A
24	C008	YARD PIPING PLAN II
25	C009	YARD PIPING PLAN III
26	C010	YARD PIPING PLAN IV
27	C010A	YARD PIPING PLAN IV–A
28	C011	YARD PIPING PROFILE I
29	C011A	YARD PIPING PROFILE I–A
30	C012	YARD PIPING PROFILE II
31	C014	YARD PIPING PROFILE IV
32	C015	PRIMARY EFFLUENT METER AND VALVE VAULTS
33	C016	CIVIL DETAILS I
34	C017	CIVIL DETAILS II
35	C018	CIVIL DETAILS III
36	C019	CIVIL DETAILS IV
37	C020	CIVIL DETAILS V
38	C021	CIVIL DETAILS VI
39	C022	PAVING AND GRADING PLAN V
40	C023	PAVING AND GRADING PLAN VI
		DEMOLITION
41	DC002	SOLIDS STABILIZATION BASIN 1 – DEMOLITION PLAN
42	DC003	EQUALIZATION BASIN 1 – DEMOLITION SECTIONS AND DETAILS
43	DC451	EXISTING SECONDARIES DEMOLITION PLAN
44	DE001	POWER AND MAINTENANCE BUILDING ELECTRICAL– MAIN SINGLE LINE DIAGRAM DEMOLITION PLAN
45	DE004	EXISTING SINGLE LINE DIAGRAM MCC–D – DEMOLITION PLAN
46	DM151	SHOWER & LOCKER BUILDING – DEMOLITION PLAN
47	DM152	SHOWER & LOCKER BUILDING – DEMOLITION ELEVATIONS
48	DM201	HEADWORKS BUILDING – DEMOLITION PLAN
49	DM202	HEADWORKS BUILDING – DEMOLITION SECTIONS
50	DM203	HEADWORKS BUILDING – DEMOLITION PHOTOGRAPHS
51	DM204	HEADWORKS BUILDING – DEMOLITION PHOTOGRAPHS
52	DM205	HEADWORKS BUILDING – ODOR REDUCTION TOWER PLAN AND SECTIONS
53	DM351	EFFLUENT DIVERSION STRUCTURE MCC BUILDING – DEMOLITION PLAN
54	DM451	SOLIDS CONTACT CHANNEL – DEMOLITION PLAN
55	DM452	SOLIDS CONTACT CHANNEL – DEMOLITION SECTION
56	DM453	SOLIDS CONTACT CHANNEL – DEMOLITION SECTION
57	DM454	SOLIDS CONTACT CHANNEL – DEMOLITION PHOTOGRAPHS
58	DM455	EXISTING WASTE SECONDARY SLUDGE PUMPS DEMOLITION PARTIAL PLAN, SECTION AND PHOTOGRAPH
59	DM456	EXISTING SECONDARIES MCC BUILDING – DEMOLITION PLAN
60	DM501	WASTE GAS BURNER – DEMOLITION PLAN AND SECTIONS
61	DM601	POWER & MAINTENANCE BUILDING – DEMOLITION PLAN
62	DM602	POWER & MAINTENANCE BUILDING – DEMOLITION PHOTOS
		ARCHITECTURAL
63	A001	LOCKER & SHOWER BUILDING – FIRST FLOOR PLAN & ENLARGED LOCKER ROOMS
64	A002	BLOWER AND SOLIDS HANDLER BUILDING – CODE REVIEW
65	A003	LOCKER & SHOWER BUILDING – SCHEDULES
66	A004	BLOWER AND SOLIDS HANDLER BUILDING – SCHEDULES
67	A005	LOCKER & SHOWER, SOLIDS HANDLING, BLOWER BUILDINGS – TYPICAL BUILDING DETAILS
68	A006	LOCKER & SHOWER, SOLIDS HANDLING, BLOWER BUILDINGS – TYPICAL BUILDING DETAILS
69	A007	LOCKER & SHOWER, SOLIDS HANDLING, BLOWER BUILDINGS – TYPICAL BUILDING DETAILS
70	A008	LOCKER & SHOWER, SOLIDS HANDLING, BLOWER BUILDINGS – BUILDING PENETRATION DETAILS I
71	A009	LOCKER & SHOWER, SOLIDS HANDLING, BLOWER BUILDINGS – BUILDING PENETRATION DETAILS II
72	A010	LOCKER & SHOWER, SOLIDS HANDLING, BLOWER BUILDINGS – ARCHITECTURAL ELEVATOR DETAILS
73	A151	LOCKER & SHOWER BUILDING – FIRST FLOOR PLAN & ENLARGED LOCKER ROOMS
74	A152	LOCKER & SHOWER BUILDING – SECOND FLOOR PLAN
75	A153	LOCKER & SHOWER BUILDING – ROOF PLAN
76	A154	LOCKER & SHOWER BUILDING – WEST & SOUTH EXTERIOR ELEVATIONS
77	A155	LOCKER & SHOWER BUILDING – EAST & NORTH EXTERIOR ELEVATIONS
78	A156	LOCKER & SHOWER BUILDING – WALL SECTIONS 1
79	A157	LOCKER & SHOWER BUILDING – WALL SECTIONS 2
80	A158	LOCKER & SHOWER BUILDING – WALL SECTIONS 3
81	A159	LOCKER & SHOWER BUILDING – WALL SECTIONS 4
82	A160	LOCKER & SHOWER BUILDING – FIRST FLOOR CEILING PLAN
83	A161	LOCKER & SHOWER BUILDING – SECOND FLOOR CEILING PLAN
84	A162	LOCKER & SHOWER BUILDING – INTERIOR ELEVATIONS 1
85	A163	LOCKER & SHOWER BUILDING – INTERIOR ELEVATIONS 2
86	A164	LOCKER & SHOWER BUILDING – INTERIOR ELEVATIONS 3
		ARCHITECTURAL
87	A165	LOCKER & SHOWER BUILDING – DETAILS 1
88	A166	LOCKER & SHOWER BUILDING – DETAILS 2
89	A167	LOCKER & SHOWER BUILDING – DETAILS 3
90	A168	LOCKER & SHOWER BUILDING – DETAILS 4
91	A425	BLOWER BUILDING – FLOOR PLAN & ROOF PLAN
92	A426	BLOWER BUILDING – EXTERIOR ELEVATIONS
93	A427	BLOWER BUILDING – WALL SECTIONS
94	A428	BLOWER BUILDING – WALL SECTIONS
95	A551	SOLIDS HANDLING BUILDING – FLOOR PLAN
96	A552	SOLIDS HANDLING BUILDING – FLOOR PLAN
97	A553	SOLIDS HANDLING BUILDING – ROOF PLAN
98	A554	SOLIDS HANDLING BUILDING – EXTERIOR ELEVATIONS
99	A555	SOLIDS HANDLING BUILDING – EXTERIOR ELEVATIONS
100	A556	SOLIDS HANDLING BUILDING – WALL SECTIONS
101	A557	SOLIDS HANDLING BUILDING – WALL SECTIONS
102	A558	SOLIDS HANDLING BUILDING – WALL SECTIONS
		STRUCTURAL
103	S001	STRUCTURAL GENERAL NOTES
104	S001A	SPECIAL INSPECTION AND TESTING – 1
105	S001B	SPECIAL INSPECTION AND TESTING – 2
106	S001C	SPECIAL INSPECTION AND TESTING – 3
107	S002	TYPICAL CONCRETE DETAILS – 1
108	S003	TYPICAL CONCRETE DETAILS – 2
109	S004	TYPICAL CONCRETE DETAILS – 3
110	S005	TYPICAL REINFORCING DETAILS
111	S006	TYPICAL BLOCK WALL DETAILS – 1
112	S007	TYPICAL BLOCK WALL DETAILS – 2
113	S008	TYPICAL METAL DECK DETAILS
114	S009	TYPICAL STEEL DETAILS – 1
115	S010	TYPICAL RAILING DETAILS
116	S011	TYPICAL GRATING DETAILS
117	S012	MISCELLANEOUS BUILDING SUBGRADE PREPARATION DETAILS
118	S151	LOCKER / SHOWER BUILDING – FOUNDATION PLAN AND DETAILS
119	S152	LOCKER / SHOWER BUILDING – 2ND FLOOR FRAMING PLAN
120	S153	LOCKER / SHOWER BUILDING – ROOF FRAMING PLAN
121	S154	LOCKER / SHOWER BUILDING – WEST & EAST ELEVATIONS AND STRUCTURAL DETAILS
122	S155	LOCKER / SHOWER BUILDING – SOUTH & NORTH ELEVATIONS AND STRUCTRURAL DETAILS
123	S156	LOCKER / SHOWER BUILDING – STRUCTRURAL DETAILS
124	S204	HEADWORKS BUILDING – ODOR REDUCTION TOWER PLAN AND SECTIONS
125	S351	FLOW EQUALIZATION BASIN – PLAN, SECTION AND DETAIL
126	S352	FLOW EQUALIZATION BASIN – SECTION AND DETAILS
127	S353	FLOW EQUALIZATION BASIN – SECTION AND DETAILS
128	S354	FLOW EQUALIZATION PUMP STATION – PLAN AND SECTION
129	S355	FLOW EQUALIZATION PUMP STATION – SECTIONS
130	S356	EFFLUENT DIVERSION STRUCTURE MCC BUILDING
131	S357	FLOW EQUALIZATION DREDGE CRANE PLAN/SECTIONS AND DETAILS
132	S401	NEW BIOFILTER – TOP AND BOTTOM PLAN
133	S402	BIOFILTER – SECTIONS
134	S403	BIOFILTER RECIRCULATION PUMP STATION – PLAN AND SECTIONS
135	S404	BIOFILTER – DETAILS
136	S425	ACTIVATED SLUDGE BASIN – TOP PLAN
137	S426	ACTIVATED SLUDGE BASIN – BOTTOM PLAN
138	S427	ACTIVATED SLUDGE BASIN – SECTIONS
139	S428	ACTIVATED SLUDGE BASIN – SECTIONS
140	S429	ACTIVATED SLUDGE BASIN – SECTIONS
141	S431	BLOWER BUILDING – FOUNDATION AND ROOF FRAMING PLAN
142	S432	BLOWER BUILDING – SECTIONS AND DETAILS
143	S433	BLOWER BUILDING – SECTIONS AND DETAILS
144	S451	SECONDARY SEDIMENTATION TANKS – TOP PLAN
145	S452	SECONDARY SEDIMENTATION TANKS – BOTTOM PLAN
146	S453	SECONDARY SEDIMENTATION TANKS – SECTION
147	S454	RSS/WSS PUMP STATION 2 – PLAN AND SECTIONS
148	S455	SECONDARY SEDIMENTATION SPLITTER BOX SECTIONS AND DETAILS
149	S456	SECONDARY SEDIMENTATION TANK – DETAILS
150	S457	INTERSTAGE PUMP STATION – PLAN AND SECTION
151	S551	DEWATERING BUILDING – PLAN
152	S552	DEWATERING BUILDING – PLAN
153	S553	DEWATERING BUILDING – SECTION I
154	S554	DEWATERING BUILDING – SECTION II
155	S555	DEWATERING BUILDING – ROOF FRAMING PLAN
156	S556	DEWATERING BUILDING – DETAILS I
157	S557	DEWATERING BUILDING – DETAILS II
		MECHANICAL
158	M001	PROCESS DETAILS I
159	M002	PROCESS DETAILS II
160	M003	PROCESS DETAILS III
161	M004	PROCESS DETAILS IV
162	M005	PROCESS DETAILS V
163	M006	PROCESS DETAILS VI
164	M007	PROCESS DETAILS VII
165	M008	PROCESS DETAILS VIII
166	M201	HEADWORKS BUILDING – TOP PLAN
167	M202	HEADWORKS BUILDING – SECTIONS
168	M203	HEADWORKS BUILDING – DETAILS
169	M204	HEADWORKS BUILDING – ODOR REDUCTION TOWER PLAN AND SECTIONS
170	M351	EQUALIZATION BASIN PUMP STATION – MECHANICAL PLAN
171	M352	EQUALIZATION BASIN PUMP STATION – MECHANICAL SECTIONS
		MECHANICAL
172	M353	EQUALIZATION BASIN PUMP STATION – MECHANICAL SECTIONS
173	M401	BIOFILTER – TOP AND BOTTOM PLANS
174	M402	BIOFILTER – SECTIONS
175	M403	BIOFILTER RECIRCULATION PUMP STATION – PLAN AND SECTION
176	M425	ACTIVATED SLUDGE BASIN – TOP PLAN
177	M426	ACTIVATED SLUDGE BASIN – BOTTOM PLAN
178	M427	ACTIVATED SLUDGE BASIN – SECTIONS
179	M428	ACTIVATED SLUDGE BASIN – DETAILS
180	M429	BLOWER BUILDING – PLAN
181	M430	BLOWER BUILDING – SECTIONS
182	M431	ACTIVATED SLUDGE BASIN – SECTIONS
183	M451	SECONDARY SEDIMENTATION TANKS 1 AND 2 – PLAN
184	M452	SECONDARY SEDIMENTATION TANKS 3 AND 4 – PLAN AND EQUIPMENT LIST
185	M453	SECONDARY SEDIMENTATION TANK 3 – SECTION
186	M454	SECONDARY SEDIMENTATION TANKS 3 AND 4 – PARTIAL PLANS, SECTIONS, AND DETAILS
187	M455	INTERSTAGE PUMP STATION – PLAN AND SECTION
188	M456	RSS/WSS PUMPING STATION 1 – PLAN
189	M457	RSS/WSS PUMPING STATION 1 – SECTIONS
190	M458	RSS/WSS PUMPING STATION 2 – PLAN
191	M459	RSS/WSS PUMPING STATION 2 – SECTIONS
192	M460	SECONDARY SEDIMENTATION SPLITTER BOX – SECTIONS AND DETAILS
193	M551	SOLIDS HANDLING BUILDING – PLAN
194	M552	SOLIDS HANDLING BUILDING – PLAN
195	M553	SOLIDS HANDLING BUILDING – SECTIONS I
196	M554	SOLIDS HANDLING BUILDING – SECTIONS II
197	M555	SOLIDS HANDLING BUILDING – DETAILS I
198	M557	POLYMER SYSTEM – ISOMETRIC PLAN
199	M601	POWER AND MAINTENANCE BUILDING – PLAN
200	M602	POWER AND MAINTENANCE BUILDING – SECTIONS & DETAILS
201	M603	WASTE GAS BURNER – PLAN & SECTIONS
202	M871	3W PLANT WATER PIPING PLAN
		HVAC
203	H001	HVAC/PLUMBING MECHANICAL LEGEND
204	H002	EQUIPMENT SCHEDULES
205	H003	TITLE 24 FORMS I
206	H004	TITLE 24 FORMS II
207	H005	TITLE 24 FORMS III
208	H151	LOCKER & SHOWER BUILDING – HVAC FIRST FLOOR PLAN
209	H152	LOCKER & SHOWER BUILDING – HVAC SECOND FLOOR PLAN
210	H153	LOCKER & SHOWER BUILDING – PLUMBING WATER FIRST FLOOR PLAN
211	H154	LOCKER & SHOWER BUILDING – PLUMBING WATER SECOND FLOOR PLAN
212	H155	LOCKER & SHOWER BUILDING – PLUMBING WASTE FIRST FLOOR PLAN
213	H156	LOCKER & SHOWER BUILDING – PLUMBING WASTE SECOND FLOOR PLAN
214	H157	MECHANICAL DETAILS I
215	H158	MECHANICAL DETAILS II
216	H159	MECHANICAL DETAILS III
217	H160	LOCKER & SHOWER BUILDING – MECHANICAL ROOF PLAN
218	H201	HEADWORKS – HVAC PLAN
219	H351	EFFLUENT DIVERSION STRUCTURE ELECTRICAL ROOM HVAC
220	H431	BLOWER BUILDING CONTROL ROOM HVAC PLAN
221	H451	EXISTING SECONDARIES MCC BUILDING – HVAC PLAN
222	H551	SOLIDS HANDLING BUILDING – HVAC PLAN
223	H552	SOLIDS HANDLING BUILDING – HVAC SECTIONS
		ELECTRICAL
224	E001	ELECTRICAL SYMBOLS LEGEND
225	E002	ELECTRICAL – MAIN SINGLE LINE DIAGRAM MODIFICATION PLAN
226	E003	MAIN SWITCHGEAR "MSG" ELEVATION
227	E004	ELECTRICAL SITE PLAN
228	E020	CONTROL DIAGRAMS 1
229	E021	CONTROL DIAGRAMS 2
230	E022	CONTROL DIAGRAMS 3
231	E023	CONTROL DIAGRAMS 4
232	E024	CONTROL DIAGRAMS 5
233	E025	CONTROL DIAGRAMS 6
234	E026	CONTROL DIAGRAMS 7
235	E027	CONTROL DIAGRAMS 8
236	E028	CONTROL DIAGRAMS 9
237	E029	CONTROL DIAGRAMS 10
238	E030	CONTROL DIAGRAMS 11
239	E031	CONTROL DIAGRAMS 12
240	E034	CONDUIT/WIRE SCHEDULE 1
241	E035	CONDUIT/WIRE SCHEDULE 2
242	E036	CONDUIT/WIRE SCHEDULE 3
243	E037	CONDUIT/WIRE SCHEDULE 4
244	E040	PANEL SCHEDULE 1
245	E041	PANEL SCHEDULE 2 (EXISTING PANELS)
246	E042	ELECTRICAL DETAILS 1
247	E043	ELECTRICAL DETAILS 2
248	E044	LIGHTING SCHEDULE
249	E045	PULLBOX AND DUCTBANK SCHEDULE
250	E151	LOCKER & SHOWER BUILDING FIRST AND SECOND FLOOR – ELECTRICAL PLAN
251	E152	LOCKER & SHOWER BUILDING FIRST AND SECOND FLOOR – LIGHT, TELEPHONE, DATA AND FIRE ALARM PLAN
252	E153	NEW SHEET LTG–1C
253	E154	NEW SHEET LTG–1C
254	E155	NEW SHEET LTG–3C
		ELECTRICAL
255	E201	HEADWORKS BUILDING – ELECTRICAL DEMOLITION PLAN
256	E202	HEADWORKS BUILDING – MCC–E SINGLE LINE DIAGRAM
257	E203	HEADWORKS BUILDING – MCC–E ELEVATION
258	E204	HEADWORKS BUILDING – ELECTRICAL PLAN
259	E205	HEADWORKS BUILDING – ODOR REDUCTION TOWER ELECTRICAL PLAN
260	E351	EQUALIZATION BASIN PUMP STATION – ELECTRICAL DEMOLITION PLAN
261	E352	FLOW EQUALIZATION – MCC–G SINGLE LINE DIAGRAM
262	E353	EFFLUENT PUMP STATION – MCC–G ELEVATION
263	E354	EQUALIZATION BASIN PUMP STATION – ELECTRICAL PLAN
264	E355	EFFLUENT DIVERSION STRUCTURE – ELECTRICAL PLAN
265	E381	CHLORINE BUILDING – ELECTRICAL DEMOLITION PLAN
266	E382	CHLORINE BUILDING – MCC–H SINGLE LINE DIAGRAM AND ELEVATION
267	E383	CHLORINE BUILDING – ELECTRICAL PLAN
268	E401	BIOFILTER RECIRCULATION PUMP STATION – ELECTRICAL PLAN
269	E402	PRIMARY EFFLUENT SPLITTER BOX – ELECTRICAL PLAN
270	E425	AERATION BUILDING – MCC–DA SINGLE LINE DIAGRAM
271	E426	AERATION BUILDING – MCC–DA ELEVATION
272	E427	BLOWER BUILDING – ELECTRICAL PLAN
273	E428	BLOWER BUILDING – LIGHTING AND RECEPATCLE PLAN
274	E429	ACTIVATED SLUDGE BASIN – ELECTRICAL PLAN
275	E451	SECONDARY SEDIMENTATION MCC ROOM – ELECTRICAL DEMOLITION PLAN
276	E452	SECONDARY SEDIMENTATION MCC ROOM – MCC–D SINGLE LINE DIAGRAM
277	E453	SECONDARY SEDIMENTATION MCC ROOM – MCC–D ELEVATION
278	E454	INTERSTAGE PUMP STATION AND SECONDARY SEDIMENTATION MCC ROOM – ELECTRICAL PLAN
279	E455	RSS/WSS PUMP STATION 1 – ELECTRICAL PLAN
280	E456	RSS/WSS PUMP STATION 2 – ELECTRICAL PLAN
281	E457	SECONDARY SEDIMENTATION TANKS 1 AND 2 – ELECTRICAL PLAN
282	E458	SECONDARY SEDIMENTATION TANKS 3 AND 4 – ELECTRICAL PLAN
283	E501	WASTE GAS BURNER – ELECTRICAL PLAN
284	E551	SOLIDS HANDLING BUILDING – MCC–J SINGLE LINE DIAGRAM
285	E552	SOLIDS HANDLING BUILDING – MCC–J ELEVATION
286	E553	SOLIDS HANDLING BUILDING – ELECTRICAL PLAN
287	E554	SOLIDS HANDLING BUILDING – POLYMER AREA ENLARGED – ELECTRICAL PLAN
288	E555	SOLIDS HANDLING BUILDING – THICKENED WAS PUMP AREA ENLARGED – ELECTRICAL PLAN
289	E556	SOLIDS HANDLING BUILDING – SCREW PRESS AREA ENLARGED – ELECTRICAL PLAN
290	E557	SOLIDS HANDLING BUILDING CONVEYOR SYSTEM– ELECTRICAL PLAN
291	E558	SOLIDS HANDLING BUILDING – LIGHTING AND RECEPTACLE PLAN
292	E601	POWER AND MAINTENANCE BUILDING – ELECTRICAL ROOM DEMOLITION PLAN
293	E602	POWER AND MAINTENANCE BUILDING – MCC–A SINGLE LINE DIAGRAM
294	E603	POWER AND MAINTENANCE BUILDING – MCC–A ELEVATION
295	E604	POWER AND MAINTENANCE BUILDING – MCC–B SINGLE LINE DIAGRAM
296	E605	POWER AND MAINTENANCE BUILDING – MCC–B ELEVATION
297	E606	POWER AND MAINTENANCE BUILDING – MCC–C SINGLE LINE DIAGRAM
298	E607	POWER AND MAINTENANCE BUILDING – MCC–C AND GENERATOR TERMINATION CABINET ELEVATIONS
299	E608	POWER AND MAINTENANCE BUILDING – ELECTRICAL PLAN
300	E609	POWER AND MAINTENANCE BUILDING – ENLARGED ELECTRICAL ROOM PLAN
301	E610	POWER AND MAINTENANCE BUILDING – POWER GENERATOR ROOM ELECTRICAL PLAN
302	E611	WASTE GAS BURNER – ELECTRICAL PLAN
		PROCESS & INSTRUMENTATION
303	I001	PROCESS AND INSTRUMENTATION SYMBOLS LEGEND
304	I002	PROCESS AND INSTRUMENTATION SYMBOLS LEGEND
305	I003	SCADA BLOCK DIAGRAM
306	I004	STANDARD CONTROL PANEL RACK BILL OF MATERIAL
307	I005	STANDARD CONTROL PANEL CABINET LAYOUT
308	I006	STANDARD CONTROL PANEL WIRING DIAGRAM – DIGITAL POINTS
309	I007	STANDARD CONTROL PANEL WIRING DIAGRAM – ANALOG POINTS
310	I008	STANDARD CONTROL PANEL WIRING DIAGRAM – POWER DISTRIBUTION
311	I010	INSTALLATION DETAILS 1
312	I011	INSTALLATION DETAILS 2
313	I012	INSTALLATION DETAILS 3
314	I101	SWITCHGEAR
315	I201	HEADWORKS SCREENS
316	I202	HEADWORKS SCREENINGS WASHER/COMPACTORS
317	I203	HEADWORKS SCREENINGS AND GRIT DISPOSAL SYSTEM
318	I205	ODOR CONTROL AT HEADWORKS
319	I301	PRIMARY EFFLUENT FLOW CONTROL
320	I351	EQUALIZATION BASIN PUMP STATION
321	I352	WATER RECLAMATION PLANT WASTE BACK WASH DISCHARGE
322	I403	BIOFILTER 2 AND RECIRCULATION STRUCTURE
323	I404	ACTIVATED SLUDGE TANK DIVERSION STRUCTURE
324	I425	ACTIVATED SLUDGE TANK 1
325	I426	ACTIVATED SLUDGE TANK 2
326	I427	ACTIVATED SLUDGE TANK 3
327	I429	ACTIVATED SLUDGE TANK BLOWER 1
328	I430	ACTIVATED SLUDGE TANK BLOWER 2
329	I431	ACTIVATED SLUDGE TANK BLOWER 3
330	I451	RETURN SECONDARY SLUDGE PUMP STATION 1
331	I452	RETURN SECONDARY SLUDGE PUMP STATION 2
332	I453	SECONDARY SEDIMENTATION TANKS 3 & 4
333	I454	WASTE SECONDARY SLUDGE PUMPING STATION 1 AND 2
334	I455	PROCESS WATER AND INTERSTAGE PUMP STATION
335	I475	WSS THICKENING
336	I480	DREDGE
337	I551	SLUDGE HOLDING TANK AND DEWATERING FEED
338	I552	SLUDGE DEWATERING SCREW PRESS
339	I553	CAKE LOAD OUT
340	I554	POLYMER FEED SYSTEM I POLYMER TANK AND BLEND UNITS
341	I555	POLYMER FEED SYSTEM II AGING TANK AND POST DILUTION UNITS
342	I601	POWER GENERATOR
343	I602	WASTE GAS BURNER

HDR

HDR Engineering, Inc.

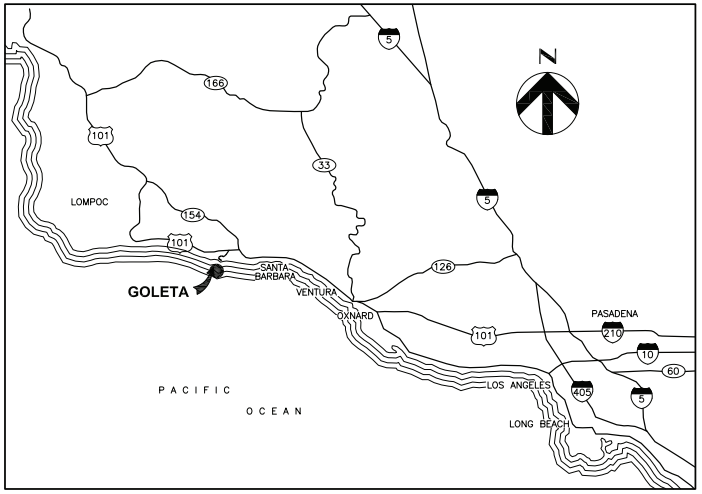

VICINITY MAP
NTS

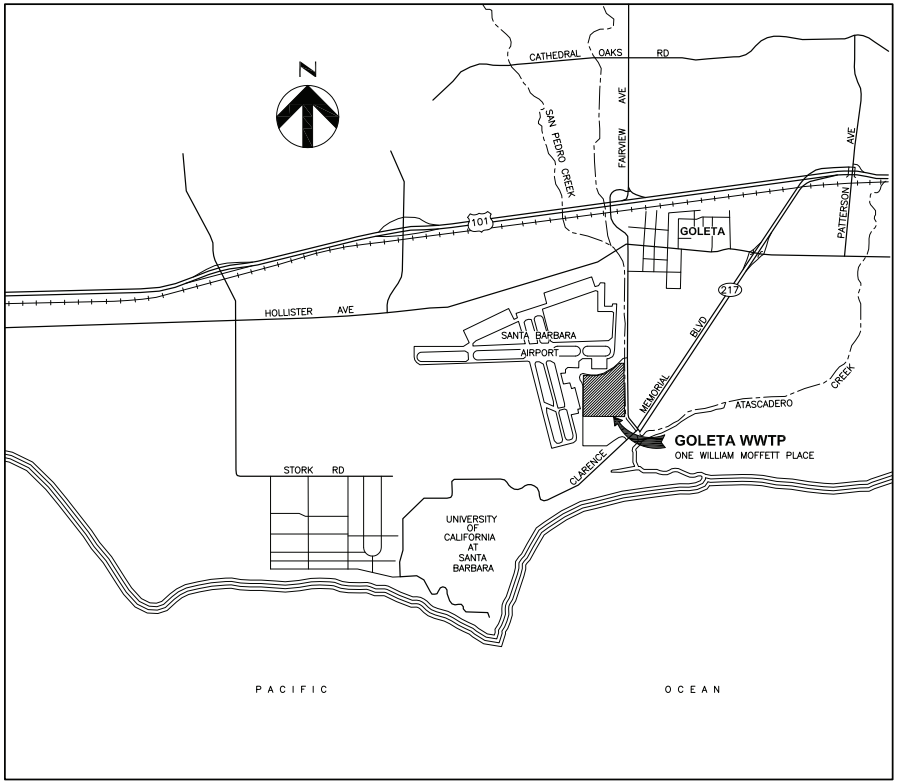

LOCATION MAP
NTS

HDR Engineering, Inc. 3230 El Camino Real Suite 200 Irvine, Ca. 92602-1377	DESIGNED AD DRAWN EG CHECKED GG	SUBMITTED _____ DATE _____ APPROVED _____ DATE _____	FILE – DATE –	GOLETA SANITARY DISTRICT APPROVED _____ DATE _____ GENERAL MANAGER / DISTRICT ENGINEER RCE No. 18109	VERIFY SCALE BAR IS ONE INCH ON ORIGINAL DRAWING. 0 1 IF NOT ONE INCH ON THIS SHEET, ADJUST SCALE ACCORDINGLY.	WASTEWATER TREATMENT PLANT UPGRADING	LOCATION AND VICINITY MAP	DRAWING NUMBER G001 SHEET 3 OF 343

C:\JOSE\Goleta\101122\NoSeal\ 00G-001.dwg 11/22/10 15:23

MATERIALS IN PLAN/SECTION

- PRECAST CONCRETE (PLAN/SECTION)
- MORTAR GROUT OR PLASTER
- CONCRETE MASONRY (PLAN/SECTION)
- ALUMINUM
- RIGID INSULATION (SECTION)
- TO BE BUILT FOR FUTURE REMOVAL
- ASPHALT
- PROPERTY LINE
- OUTLINE OF EXISTING INSTALLATION
- OUTLINE OF EXISTING INSTALLATION HIDDEN
- 204 — ROOM NUMBER
- HOISTING HOOK
- UTILITY STATION
- FIRE HYDRANT
- WATER METER
- DH-9 — SOIL BORING AND DESIGNATION
- UP — UTILITY POLE (TELEPHONE OR ELECTRICAL)
- 24 — PERMANENT BENCH MARK OR SURVEY MONUMENT
- 110 — EXISTING GRADE CONTOURS
- 110 — FINISH GRADE CONTOURS
- 110.50 — FINISH GRADE SPOT ELEV.
- 110.50 / 111.00 — FINISH T/C ELEV. GUTTER ELEV.
- SWALE OR DITCH
- NEW
- EXISTING
- BURIED

SYMBOLS

MECHANICAL

OTHER THAN THOSE SHOWN BELOW, SYMBOLS EMPLOYED ON MECHANICAL DRAWINGS ARE AS SET FORTH IN ANSI Z32.2.3, ANSI Z32.2.4 AND ANSI Y32.11.

- BUTTERFLY VALVE
- PLUG VALVE
- BALL VALVE
- DIAPHRAGM VALVE
- PINCH VALVE
- GATE VALVE
- GLOBE VALVE
- FLUSHING COCK
- MANUAL AIR VENT
- AUTOMATIC AIR VENT
- RELIEF VENT
- FPC
- FLEX COUPLING
- PC-T – GROOVED END
- PC-T – (F), FLANGED CONNECTION
- CONE VALVE
- CHECK VALVE
- DOUBLE DISK CHECK VALVE
- BALL CHECK VALVE
- KNIFE GATE VALVE
- NEEDLE VALVE
- THREE WAY BALL VALVE
- THREE WAY PLUG VALVE
- PRESSURE REDUCING VALVE
- PRESSURE SUSTAINING VALVE
- OR — PRESSURE RELIEF VALVE
- X — AIR RELEASE VACUUM VALVE A = AIR RELEASE V = VACUUM
- TELESCOPE VALVE

ABBREVIATIONS

GENERAL PURPOSE ABBREVIATIONS, OTHER THAN THOSE NOTED BELOW, CONFORM TO ANSI Z32.13 AND ANSI Z10.1.

AC	ASPHALTIC CONCRETE
ACP	ASBESTOS CEMENT PIPE
ARCH	ARCHITECTURAL
BF	BLIND FLANGE
BOD	BIOCHEMICAL OXYGEN DEMAND
CC	CENTER TO CENTER
CI	CAST IRON
CFM	CUBIC FEET PER MINUTE
CLR	CLEAR
CMP	CORRUGATED METAL PIPE
CONC	CONCRETE
CONN	CONNECTION
CONT	CONTINUOUS
CPLG	COUPLING
CTR	CENTER
DIA	DIAMETER
DWF	DRY WEATHER FLOW
EA	EACH
EFF	EFFLUENT
EJF	EXPANSION JOINT FILLER
EW	EACH WAY
EWC	ELECTRIC WATER COOLER
FB	FLAT BAR
FCA	FLANGE COUPLING ADAPTER
FF	FAR FACE
FG	FINISH GRADE
FL	FLOW LINE
FM	FORCE MAIN
FMH	FLEXIBLE METAL HOSE
FS	FINISHED SURFACE
FUT	FUTURE
FPC	FLEXIBLE PIPE COUPLING
FRP	FIBERGLASS REINFORCED PLASTIC
FRP	FIBERGLASS REINFORCED POLYESTER
GSD	GOLETA SANITARY DISTRICT
GWSD	GOLETA WEST SANITARY DISTRICT
HORIZ	HORIZONTAL
HT	HEIGHT
HV	HOSE VALVE
ID	INNER DIAMETER
IF	INSIDE FACE
INF	INFLUENT
JST	JOIST
JT	JOINT
LW	LOW WATER
LWR	LOWER
MAX	MAXIMUM
MCC	MOTOR CONTROL CENTER
MFR	MANUFACTURER
MGD	MILLION GALLON/DAY
MIN	MINIMUM
NIC	NOT IN CONTRACT
NTS	NOT TO SCALE
OPNG	OPENING
ORT	ODOR REDUCTION TOWER
P/C	PLAIN CONCRETE
PCP	PLAIN CONCRETE PIPE
PC-T	FLEXIBLE PIPE COUPLING (TENSION TYPE)
PCC	PLANT CONTROL CENTER
PC-T (F)	PIPE COUPLING (FLANGED)
PG	PRESSURE GAUGE
PK	PEAK
PVC	POLY VINYL CHLORIDE
RE-STL	REINFORCING STEEL
REQ'D	REQUIRED
R/C	REINFORCED CONCRETE
RCP	REINFORCED CONCRETE PIPE
RPMP	REINFORCED PLASTIC MORTAR PIPE
RTP	REINFORCED THERMOSET PLASTIC
SBMA	SANTA BARBARA MUNICIPAL AIRPORT
SED	SEDIMENTATION
SCH	SCHEDULE
SHT	SHEET
SIM	SIMILAR
SOG	SLAB ON GRADE
SS	STAINLESS STEEL
SST	STAINLESS STEEL
SQ	SQUARE
STL	STEEL
T & B	TOP AND BOTTOM
T/C	TOP OF CURB
TOC	TOP OF CONCRETE
TYP	TYPICAL
UCSB	UNIVERSITY OF CALIFORNIA SANTA BARBARA
UG	UNDERGROUND
UNO	UNLESS NOTED OTHERWISE
UP	UTILITY POLE
VCP	VITRIFIED CLAY PIPE
VTR	VENT THROUGH ROOF
W/	WITH
WC	WATER COLUMN OR WATER CLOSET
WCO	WALL CLEANOUT
WPJ	WEAKENED PLANE JOINT
WS	WATER SURFACE
WSTP	WATER STOP
WWF	WELDED WIRE FABRIC WET WEATHER FLOW

EQUIPMENT NUMBERING SYSTEM

MAJOR ITEMS OF MECHANICAL, ELECTRICAL AND INSTRUMENTATION EQUIPMENT ARE IDENTIFIED BY A CODED NUMBERING SYSTEM, CONSISTING OF ONE TO THREE LETTERS WHICH ARE UNIQUE TO THAT PARTICULAR ITEM, FOLLOWED BY A FOUR DIGIT NUMBER, EQUIPMENT NUMBERS ARE DEPICTED IN THE FOLLOWING MANNER:

AHU 8419 B

NOTE (3) — NOTE (4)
NOTE (1) — NOTE (2)

NOTES:

(1) AREA OR PROCESS CODE
(2) EQUIPMENT IDENTIFICATION NUMBER
(3) EQUIPMENT DESCRIPTION PREFIX
(4) EQUIPMENT DESCRIPTION SUFFIX

EQUIPMENT PREFIXES

AC	AIR COMPRESSOR
ACC	AIR CONDITIONING COIL
ACT	ACTIVATED CARBON UNIT
AD	AIR DRYER
AE	ANALYZER PRIMARY ELEMENT
AF	AIR FILTER
AHU	AIR HANDLING UNIT
AI	ANALYZER INDICTOR
AIC	ANALYZER INDICATOR CONTROLLER
AS	AUTOMATIC SAMPLER
ATI	ANALYZER TRANSMITTER INDICTOR
B	BLOWER
BFP	BELT FILTER PRESS
BNR	BURNER
BP	BACKFLOW PREVENTER
BRV	BACKPRESSURE REGULATING VALVE
C	CRANE
CAL	CALORIMETER
CDR	CONDENSER
CEN	CENTRIFUGE
CFR	CHEMICAL FEEDER
CHR	CHILLER
CL	CLUTCH
COL	COLLECTOR
CON	CONVEYOR
CP	COMPRESSOR
CPL	COUPLING
CPR	COMPUTER
CPTT	CARPET TILE
CTR	COOLING TOWER
CV	CONTROL VALE
CYL	CYLINDER
DE	DENSITY PRIMARY ELEMENT
DIC	DENSITY DISINDICATOR CONTROLLER
DFC	DIGESTER FLOATING COVER
DIS	DISTRIBUTOR
DI	DENSITY
DPR	DAMPER
DU	DRIVE UNIT
E	ENGINE
EB	ENGINE BLOWER MODULE
EG	ENGINE GENERATOR MODULE
EP	ENGINE-PUMP MODULE
EPR	EVAPORATOR
F	FAN
FE	FLOW PRIMARY ELEMENT
FG	FLOW GLASS
FI	FLOW INDICATOR
FIC	FLOW INDICATING CONTROLLER
FIR	FLOW INDICATING RECORDER
FLC	FLOCCULATOR
FLG	FLAP GATE
FLT	FILTER (PIPELINE)
FO	FLOW ORIFICE
FP	FILTER PRESS
FPU	FLUID POWER UNIT
FTI	FLOW TRANSMITTER INDICATOR
FS	FLOW SWITCH
G	GEAR
GDR	GRINDER
GEN	GENERATOR
GP	GRAPHIC PANEL
H	HOIST

EQUIPMENT PREFIXES CONTINUED

HEX	HEAT EXCHANGE
HOP	HYDRAULIC OPERATOR
HTR	HEATER
HU	HYDRAULIC UNIT
INC	INCINERATOR
INJ	INJECTOR
KS	TIMER SWITCH
LAB	LABORATORY EQUIPMENT
LCV	LEVEL CONTROL VALVE
LE	LEVEL ELEMENT
LG	LEVEL GLASS
LI	LEVEL INDICATOR
LIC	LEVEL INDICATOR CONTROLLER
LIR	LEVEL INDICATOR RECORDER
LS	LEVEL SWITCH
LTI	LEVEL TRANSMITTER INDICATOR
LVR	LOUVER (ADJUSTABLE ONLY)
M	MOTOR
MCC	MOTOR CONTROL CENTER
MEE	MISCELLANEOUS ELECTRICAL EQUIPMENT
MIE	MISCELLANEOUS INSTRUMENTATION EQUIPMENT
MME	MISCELLANEOUS MECHANICAL EQUIPMENT
MOP	MOTOR OPERATOR
MUX	MULTIPLEXOR
MX	MIXER
NS	TORQUE SWITCH
ORF	ODOR REDUCTION FACILITY
P	PUMP
PCA	AIR CONTROL PANEL
PCW	WATER CONTROL PANEL
PDI	PRESSURE DIFFERENTIAL INDICATOR
PDIC	PRESSURE DIFFERENTIAL INDICATOR CONTROLLER
PDTI	PRESSURE DIFFERENTIAL TRANSMITTER INDICATOR
PEJ	PNEUMATIC EJECTOR
PI	PRESSURE INDICATOR
PIC	PRESSURE INDICATOR CONTROLLER
PIR	PRESSURE INDICATOR RECORDER
PNL	PANEL
POP	PNEUMATIC OPERATOR
PRV	PRESSURE REGULATING OR RELIEVING VALVE
PS	PRESSURE SWITCH
PTI	PRESSURE TRANSMITTER INDICATOR
PVL	PRESSURE VESSEL
RVT	RESILLIENT VINYL TILE
S	SILENCER
SBR	SCRUBBER
SC	SPEED OR FREQUENCY CONTROLLER
SCR	SCREEN
SEP	SEPARATOR
SG	SLIDE GATE
SGO	SLIDE OR SLUICE GATE OPERATOR
SI	SPEED OR FREQUENCY INDICATOR
STI	SPEED TRANSMITTER
SV	SOLENOID VALVE
HOP	HYDRAULIC OPERATOR
T	TANK
TBN	TURBINE
TE	TEMPERATURE PRIMARY ELEMENT
TFR	TRANSFORMER
TI	TEMPERATURE INDICATOR
TIC	TEMPERATURE INDICATOR CONTROLLER
TS	TEMPERATURE SWITCH
TSW	TRANSFER SWITCH
TTI	TEMPERATURE TRANSMITTER INDICATOR
USS	UNIT SUBSTATION
V	VALVE
VFD	VARIABLE FREQUENCY DRIVE
VIB	VIBRATOR
VP	VACUUM PUMP
VSC	VARIABLE SPEED COUPLING
WE	WEIGHT PRIMARY ELEMENT
WHR	WASHER
WI	WEIGHT INDICATOR
WSR	WATER SOFTENER UNIT
WTI	WEIGHT TRANSMITTER INDICATOR
YS	VIBRATION SWITCH
ZI	POSITION INDICATOR
ZIC	POSITION INDICATOR CONTROLLER
ZS	POSITION SWITCH

PROCESS ABBREVIATIONS

A	AERATION AIR
AA	AGITATION AIR
BFE	BIOFILTER EFFLUENT
CA	COMPRESSED AIR
CD	CHEMICAL DRAIN
CEN	CENTRATE
CLG	CHLORINE GAS
CLS	CHLORINE SOLUTION
CLV	CHLORINE VACUUM
CS	CIRCULATING SLUDGE
CW	CITY WATER
D	DRAIN
DAFR	DISSOLVED AIR FLOTATION RECYCLE WATER
DAFRC	DISSOLVED AIR FLOTATION COMPRESSED WATER
DS	DIGESTED SLUDGE
DSF	DIESEL FUEL
EE	ENGINE EXHAUST
FA	FOUL AIR
FC	FERRIC CHLORIDE SOLUTION
GC	GAS CIRCULATION
GR	GRIT
HRR	HEAT RESERVOIR RETURN
HRS	HEAT RESERVOIR SUPPLY
HS	HARVESTED SLUDGE
IA	INSTRUMENT AIR
JWR	JACKET WATER RETURN
JWS	JACKET WATER SUPPLY
LOS	LUBE OIL SUPPLY
LOW	LUBE OIL WASTE
LSG	LOW PRESSURE SLUDGE GAS
ML	MIXED LIQUOR
MSG	MEDIUM PRESSURE SLUDGE GAS
NG	NATURAL GAS
OF	OVERFLOW
PD	PUMPED DRAIN
PE	PRIMARY EFFLUENT
POL	POLYELECTROLYTE
POLY	POLYMER
PS	PRIMARY SLUDGE
PSC	PRIMARY SCUM
RCP	REINFORCED CONCRETE PIPE
RS	RAW SLUDGE
RSS	RETURN SECONDARY SLUDGE
RWR	RECLAIMED WATER
SA	SERVICE AIR
SD	SANITARY DRAIN
SDL	SULFUR DIOXIDE LIQUID
SDS	SULFUR DIOXIDE SOLUTION
SDV	SULFUR DIOXIDE VACUUM
SE	SECONDARY EFFLUENT
SN	SUPERNATANT
SSC	SECONDARY SCUM
STA	STARTING AIR
SV	STEAM VENT
TD	TANK DRAIN
TS	TRANSFER SLUDGE
TWSS	THICKENED WASTE SECONDARY SLUDGE
V	VENT
WBW	WASTE BACKWASH WATER
WSS	WASTE SECONDARY SLUDGE
WW	WASTE WATER
1W	POTABLE WATER
2W	NON-POTABLE CITY WATER
2WS	NON-POTABLE CITY WATER – SOFTENED
3W	PLANT PROCESS EFFLUENT
3WL	IRRIGATION WATER

HDR Engineering, Inc.
3230 El Camino Real
Suite 200
Irvine, Ca. 92602-1377

DESIGNED AD
DRAWN SL
CHECKED GG

SUBMITTED _____ DATE _____
APPROVED _____ DATE _____

FILE –
DATE –

GOLETA SANITARY DISTRICT
APPROVED _____ DATE _____
GENERAL MANAGER / DISTRICT ENGINEER RCE No. 18109

VERIFY SCALE
BAR IS ONE INCH ON ORIGINAL DRAWING.
IF NOT ONE INCH ON THIS SHEET, ADJUST SCALE ACCORDINGLY.

WASTEWATER TREATMENT PLANT UPGRADING

SYMBOLS, ABBREVIATIONS AND EQUIPMENT PREFIXES

DRAWING NUMBER G002
SHEET 4 OF 343

C:\JOSE\Goleta\101122\NoSeal\ 00G-002.dwg 11/22/10 15:24

PROJECT DESIGN DATA

PARAMETER AND UNITS	VALUE
WASTE LOADING	
FLOW, MGD	
DRY WEATHER AVERAGE (DWAF)	9.0
ANNUAL AVERAGE DAILY (AADF)	9.8
MAXIMUM MONTH (MMF)	11.5
PEAK DAY (PDF)	18.0
PEAK HOUR (PHF)	29.7
BIOCHEMICAL OXYGEN DEMAND (BOD)	
AADF CONCENTRATION, MG/L	251
AADF QUANTITY, LBS/DAY	20,500
MMF CONCENTRATION, MG/L	291
MMF QUANTITY, LBS/DAY	27,900
TOTAL SUSPENDED SOLIDS (TSS)	
AADF CONCENTRATION, MG/L	267
AADF QUANTITY, LBS/DAY	21,800
MMF CONCENTRATION, MG/L	339
MMF QUANTITY, LBS/DAY	32,500
AMMONIA	
AADF CONCENTRATION, MG/L	30
AADF QUANTITY, LBS/DAY	2,450
MMF CONCENTRATION, MG/L	30
MMF QUANTITY, LBS/DAY	2,880
TOTAL KJELDAHL NITROGEN (TKN)	
AADF CONCENTRATION, MG/L	44
AADF QUANTITY, LBS/DAY	3,600
MMF CONCENTRATION, MG/L	44
MMF QUANTITY, LBS/DAY	4,220
DESIGN TEMPERATURE	
ANNUAL AVERAGE, °C	24
30-DAY MINIMUM, °C	20
7-DAY MINIMUM, °C	19
GSD PUMPING STATION (EXISTING)	
GSD PUMPING STATION PUMPING EQUIPMENT	
NUMBER	4
CAPACITY, EACH, GPM	4,300
TOTAL HEAD, FT	72
LOW FLOW PUMP	
NUMBER	1
CAPACITY, EACH, GPM	2,780
TOTAL HEAD, FT	63.4
PRELIMINARY TREATMENT	
MECHANICALLY CLEANED SCREENS (NEW)	
NUMBER	2
CAPACITY, EACH, MGD	15
MANUALLY CLEANED BAR SCREENS (EXISTING)	
NUMBER	1
CAPACITY, EACH, MGD	18.5
AERATED GRIT REMOVAL TANKS (EXISTING)	
NUMBER	4
DIMENSIONS	
LENGTH, EACH, FT	34
WIDTH, EACH, FT	18
DEPTH, EACH, FT	13
DETENTION TIME AT PHF, MINUTES	5.8
PRIMARY TREATMENT (EXISTING)	
PRIMARY SEDIMENTATION TANKS	
NUMBER	3
DIMENSIONS	
DIAMETER, FT	75
SIDE WATER DEPTH, FT	10
OVERFLOW RATE AT AADF, GAL/SQ FT/DAY	739
OVERFLOW RATE AT MMF, GAL/SQ FT/DAY	868
OVERFLOW RATE AT PDF, GAL/SQ FT/DAY	1,358
OVERFLOW RATE AT PHF, GAL/SQ FT/DAY	2,241
PRIMARY SLUDGE PUMPS (VARIABLE SPEED) (EXISTING)	
NUMBER	3
CAPACITY, EACH, GPM	50
TOTAL HEAD, FT	30
EXPECTED PRIMARY EFFLUENT QUALITY AT MMF	
BIOCHEMICAL OXYGEN DEMAND (BOD)	
CONCENTRATION, MG/L	198
QUANTITY, LBS/DAY	19,000
TOTAL SUSPENDED SOLIDS (TSS)	
CONCENTRATION, MG/L	141
QUANTITY, LBS/DAY	13,500
AMMONIA	
CONCENTRATION, MG/L	30
QUANTITY, LBS/DAY	2,880
TOTAL KJELDAHL NITROGEN (TKN)	
CONCENTRATING, MG/L	59
QUANTITY, LBS/DAY	5,660

PARAMETER AND UNITS	VALUE
FLOW EQUALIZATION BASIN	
NUMBER	1
SURFACE AREA, 1,000 SQ FT	54.7
VOLUME, MG	3.2
BASIN DEPTH, FT	14.5
MAXIMUM LIQUID DEPTH, FT	13.0
FLOW EQUALIZATION BASIN PUMP STATION	
EQUALIZATION BASIN PRIMARY EFFLUENT PUMPS (VARIABLE SPEED)	
NUMBER	3
CAPACITY, EACH, MGD	5.1
TOTAL HEAD, FT	48
SECONDARY TREATMENT AT MMF (INCLUDING RETURN FLOWS)	
FLOW, MGD	11.8
BOD LOADING	
CONCENTRATION, MG/L	198
QUANTITY, LBS/DAY	19,500
SOLUBLE BOD FRACTION	0.41
TSS	
CONCENTRATION, MG/L	148
QUANTITY, LBS/DAY	13,900
AMMONIA LOADING	
CONCENTRATION, MG/L	41
QUANTITY, LBS/DAY	4,040
TKN	
CONCENTRATION, MG/L	49
QUANTITY, LBS/DAY	4,820
BIOFILTERS, 1 EXISTING AND 1 NEW	
NUMBER	2
DIMENSIONS	
DIAMETER, FT	130
TYPE OF MEDIA	PLASTIC X-FLOW
SPECIFIC SURFACE AREA, SQ FT/CU FT	30
DEPTH OF MEDIA, FT	6
VOLUME OF MEDIA, EACH, CU FT	79,600
ORGANIC LOADING, LBS BOD_5/1000 CU FT/DAY	119
HYDRAULIC LOADING AT MMF (INCLUDING RECYCLE), GPM/SQ FT	0.56
RECIRCULATION FLOW, MGD	5
YIELD, LBS TSS/LBS BOD	1
BIOFILTER 1 CIRCULATION PUMPS (EXISTING)	
NUMBER	2
CAPACITY, GPM	3,500
TOTAL HEAD, FT	23
BIOFILTER 2 CIRCULATION PUMPS (NEW)	
NUMBER	2
CAPACITY, GPM	3,500
TOTAL HEAD, FT	23
ACTIVATED SLUDGE BASIN	
TYPE OF AERATION	FINE BUBBLE DIFFUSED
NUMBER OF TRAINS	3
DIMENSIONS, EACH	
LENGTH, FT	96
WIDTH, FT	40
AVERAGE SIDE WATER DEPTH, FT	18.7
TOTAL VOLUME, MG	1.6
DESIGN OXYGEN DEMAND, LBS/DAY	6,800
PEAK AIR REQUIRED, LBS/DAY	17,000
HYDRAULIC DETENTION TIME, HOURS	3.1
DESIGN MAXIMUM MLSS, MG/L	2,500
AEROBIC SRT, DAYS	2
YIELD, LBS TSS/LBS BOD	0.6
AERATION BLOWERS	
TYPE	HIGH SPEED TURBO
NUMBER	3
BLOWER CAPACITY, SCFM	3,000
DISCHARGE PRESSURE, PSIG	9.3
SECONDARY SOLIDS	
TOTAL YIELD, LBS TSS/LBS BOD REMOVED	0.7
SECONDARY SEDIMENTATION TANKS	
NUMBER OF UNITS	4
TANKS 1 AND 2 (EXISTING)	
DIMENSIONS	
DIAMETER, FT	60
AVERAGE SIDE WATER DEPTH, FT	16
SURFACE AREA, SQ FT	2,826
INFLUENT COLUMN ID, INCHES	20
INFLUENT DIVERSION WELL	
DIAMETER, FT	8
DEPTH, FT	5.5
DIFFUSION GATES, MIN. NUMBER	6

PARAMETER AND UNITS	VALUE
TANKS 3 AND 4	
DIMENSIONS	
DIAMETER, FT	80
AVERAGE SIDE WATER DEPTH, FT	16
SURFACE AREA, SQ FT	5,026
INFLUENT COLUMN ID, INCHES	32
INFLUENT DIVERSION WELL	
DIAMETER, FT	10
DEPTH, FT	5.5
DIFFUSION GATES, MIN. NUMBER	6
OVERFLOW RATES AT AADF, GPD/SQ FT	624
OVERFLOW RATES AT PDF, GPD/SQ FT	1,146
FREEBOARD, FT	2.2
RSS/WSS PUMP STATION 1	
RETURN SECONDARY SLUDGE PUMPS (VARIABLE SPEED)	
NUMBER	3
CAPACITY, GPM	1,057
TOTAL HEAD, FT	15
WASTE SECONDARY SLUDGE PUMPS (VARIABLE SPEED)	
NUMBER	2
CAPACITY, GPM	90
TOTAL HEAD, FT	200
RSS/WSS PUMP STATION 2	
RETURN SECONDARY SLUDGE PUMPS (VARIABLE SPEED)	
NUMBER	3
CAPACITY, GPM	1,879
TOTAL HEAD, FT	17.5
WASTE SECONDARY SLUDGE PUMPS (VARIABLE SPEED)	
NUMBER	2
CAPACITY, GPM	160
TOTAL HEAD, FT	210
SECONDARY EFFLUENT INTERSTAGE PUMPS (VARIABLE SPEED)	
NUMBER	4
CAPACITY OF PUMPS 1 AND 2, MGD (EXISTING)	6.0
CAPACITY OF PUMPS 3, MGD (NEW)	6.0
CAPACITY OF PUMPS 4, MGD (NEW)	6.0
TOTAL HEAD, FT	26.5
CHLORINATION (EXISTING)	
NUMBER OF TRAINS	2
DIMENSIONS	
LENGTH, FT	324
WIDTH, FT	5
AVERAGE SIDE WATER DEPTH AT AADF, FT	12
AVERAGE SIDE WATER DEPTH AT MMF, FT	12.3
DEMAND, MGD	18
HYDRAULIC RETENTION TIME (HRT) AT AADF, HOURS	0.70
HYDRAULIC RETENTION TIME (HRT) AT PDF, HOURS	0.40
EFFLUENT PUMPING STATION (EXISTING)	
VARIABLE SPEED WASTEWATER PUMPING EQUIPMENT	
NUMBER	3
CAPACITY, EACH, MGD	14.75
TOTAL HEAD, FT	41
EXPECTED SECONDARY EFFLUENT QUALITY	
BOD CONCENTRATION, MG/L	15
TSS CONCENTRATION, MG/L	15
WSS THICKENING	
NUMBER OF UNITS	2
MAXIMUM SOLIDS LOADING RATE PER UNIT, LB/HR	440
WSS FEED % SOLIDS	0.4
FLOW RATE AT DESIGN % SOLIDS, GPM	220
TWS % SOLIDS	7
FLOCCULATION TANK	
VOLUME, GALLONS	285
HEIGHT, IN	72
AGITATOR	TOP MOUNTED
MAXIMUM SOLIDS CAPACITY, LB/HR	400
SLUDGE PERCENT SOLIDS RANGE	4 TO 6
HOURS OF OPERATION, HRS/DAY	24
TWSS PUMPS (VARABLE SPEED)	
NUMBER OF PUMPS	2
CONFIGURATION	1 DUTY PER THICKENER
CAPACITY, EACH, GPM	40
DESIGN PERCENT SOLIDS, %	7
DESIGN FLOW, AT 7 PERCENT SOLIDS, EACH, GPM	20
TOTAL HEAD, FT	

PARAMETER AND UNITS	VALUE
SOLIDS TREATMENT AND DISPOSAL	
LOADING AT PDF, LBS/DAY	
PRIMARY SOLIDS	12,550
SECONDARY SOLIDS	3,970
AVERAGE SLUDGE CONCENTRATION, %	4
SLUDGE VOLUME, CU FT/DAY	6,620
LOADING, VOLATILE SOLIDS (VS)	
SOLIDS, % VOLATILE	80
TOTAL LOADING, LBS VSS/DAY	13,220
ANAEROBIC DIGESTERS (EXISTING)	
DIGESTER 1	
DIAMETER, FT	43
SIDE WATER DEPTH, FT	24.5
VOLUME, 1,000 CU FT	35.6
DIGESTER 2	
DIAMETER, FT	45
SIDE WATER DEPTH, FT	24.5
VOLUME, 1,000 CU FT	39
DIGESTER 3	
DIAMETER, FT	55
SIDE WATER DEPTH, FT	28.25
VOLUME, 1,000 CU FT	68.9
DIGESTER LOADING, LB VS/CU FT/DAY	0.1
DETENTION TIME, DAYS	21.6
VOLATILE SOLIDS VS REDUCTION, %	50
EXPECTED SLUDGE GAS PRODUCTION, 1,000 CU FT/DAY	172
SOLIDS STABILIZATION BASINS (SSB) (EXISTING)	
SSB 2 (EXISTING)	
SURFACE AREA, 1,000 SQ FT	111.6
TOTAL LIQUID DEPTH, FT	11.5
SSB 3 (EXISTING)	
SURFACE AREA, 1,000 SQ FT	107.7
TOTAL LIQUID DEPTH, FT	11.5
VOLATILE SOLIDS REDUCTION, %	4
DEWATERING	
TYPE OF DEWATERING	SCREW PRESS
NUMBER	2
MAXIMUM SOLIDS CAPACITY, LBS/HOUR	1,100
DESIGN SLUDGE, % SOLIDS	5
SLUDGE RANGE, % SOLIDS	4 TO 6
CAKE, % SOLIDS	18-20
DESIGN FLOW AT 5% SOLIDS, GPM	44
DEWATERING HOURS PER WEEK	100
SLUDGE DEWATERING FEED PUMPS	
NUMBER	2
DESIGN FLOW AT 4% SOLIDS, EACH, GPM	60
DESIGN SLUDGE, % SOLIDS	4
TOTAL HEAD, FT	105
HOLDING TANK	
NUMBER	1
WIDTH, FT	26'-8"
LENGTH, FT	26'-8"
SIDE WATER HEIGHT, FT	12
VOLUME, GALLONS	63,000
POLYMER STORAGE TANK	
NUMBER	1
VOLUME, GALLONS	1,000
APPROXIMATE STORAGE, DAYS	30
SCREW PRESS FLOCCULATOR TANK	
NUMBER	1
VOLUME, GALLONS	285
HEIGHT, FT	6
SLUDGE DRYING BEDS (EXISTING)	
NUMBER	3
DIMENSIONS, EACH, FT	
WIDTH	50
LENGTH (AVERAGE)	175
DREDGE	
TOTAL HEAD, FT	80
FLOW RATE, GPM	800

HDR Engineering, Inc.
3230 El Camino Real
Suite 200
Irvine, Ca. 92602-1377

DESIGNED AD
DRAWN SL
CHECKED GG

SUBMITTED _____ DATE _____
APPROVED _____ DATE _____

FILE –
DATE –

GOLETA SANITARY DISTRICT
APPROVED _____ DATE _____
GENERAL MANAGER / DISTRICT ENGINEER RCE No. 18109

VERIFY SCALE
BAR IS ONE INCH ON ORIGINAL DRAWING.
IF NOT ONE INCH ON THIS SHEET, ADJUST SCALE ACCORDINGLY.

WASTEWATER TREATMENT PLANT UPGRADING

DESIGN DATA

DRAWING NUMBER G003
SHEET 5 OF 343

C:\JOSE\Goleta\101122\NoSeal\ 00G-003.dwg 11/22/10 15:24

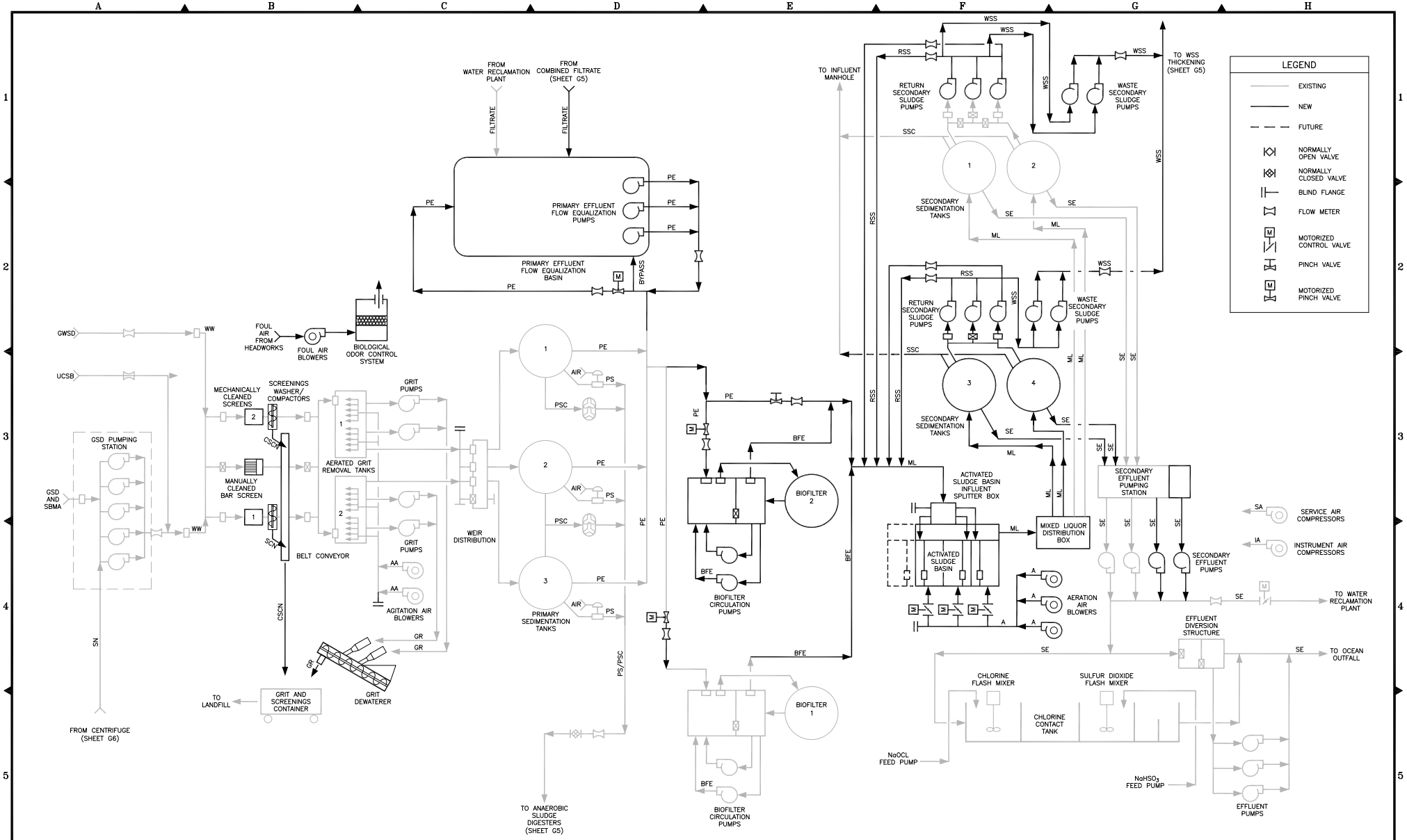

HDR Engineering, Inc. 3230 El Camino Real Suite 200 Irvine, Ca. 92602-1377	DESIGNED AD DRAWN SL CHECKED GG	SUBMITTED ____ DATE ____ APPROVED ____ DATE ____	FILE – DATE –	GOLETA SANITARY DISTRICT APPROVED ____ DATE ____ GENERAL MANAGER / DISTRICT ENGINEER RCE No. 18109	VERIFY SCALE BAR IS ONE INCH ON ORIGINAL DRAWING. IF NOT ONE INCH ON THIS SHEET, ADJUST SCALE ACCORDINGLY.	WASTEWATER TREATMENT PLANT UPGRADING	PLANT FLOW DIAGRAM LIQUIDS	DRAWING NUMBER G004 SHEET 6 OF 343

C:\JOSE\Goleta\101122\NoSeal\ 00G-004.dwg 11/22/10 15:24

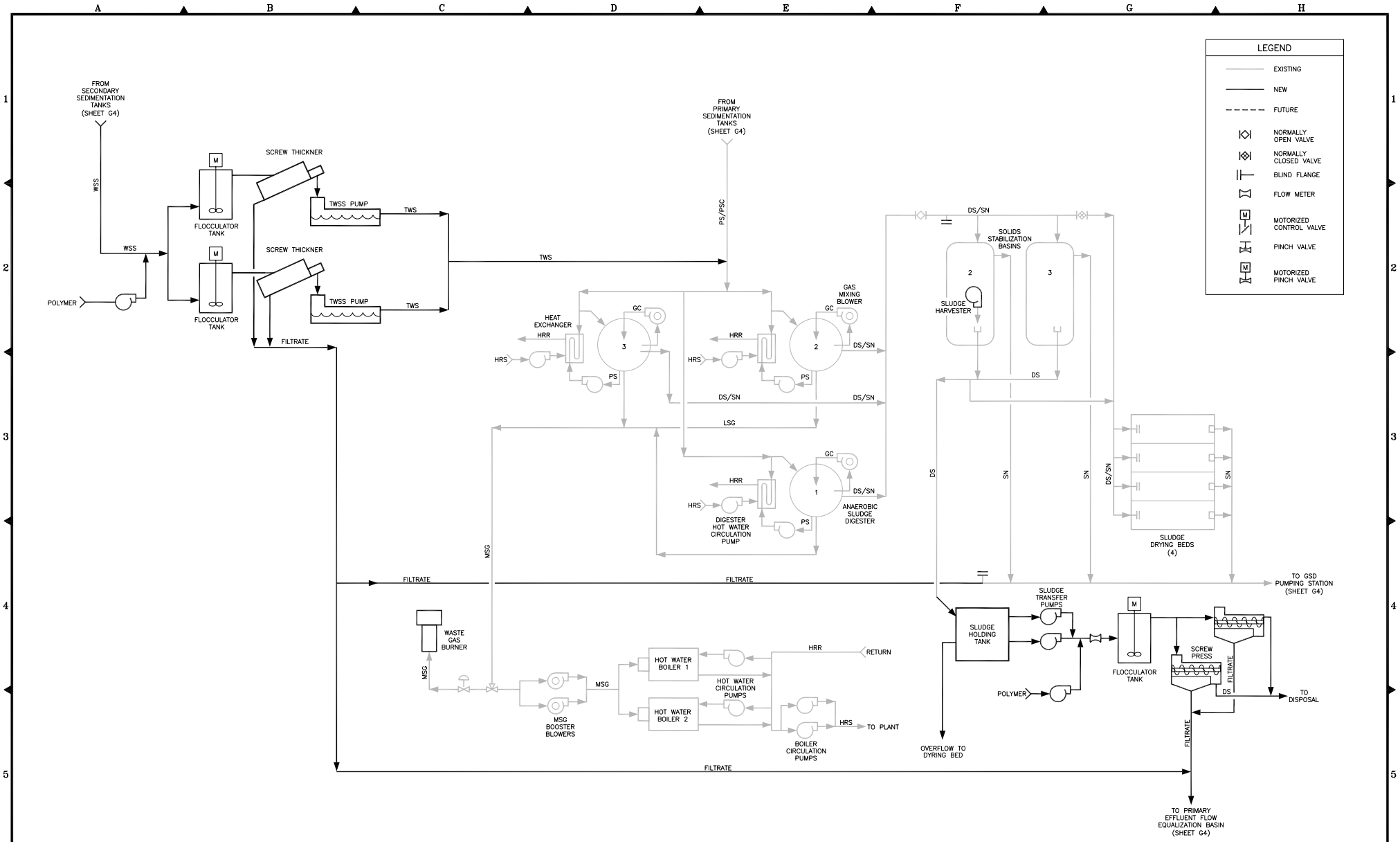

HDR Engineering, Inc. 3230 El Camino Real Suite 200 Irvine, Ca. 92602-1377	DESIGNED AD DRAWN SL CHECKED GG	SUBMITTED ____ DATE ____ APPROVED ____ DATE ____	FILE – DATE –	GOLETA SANITARY DISTRICT APPROVED ____ DATE ____ GENERAL MANAGER / DISTRICT ENGINEER RCE No. 18109	VERIFY SCALE BAR IS ONE INCH ON ORIGINAL DRAWING. IF NOT ONE INCH ON THIS SHEET, ADJUST SCALE ACCORDINGLY.	WASTEWATER TREATMENT PLANT UPGRADING	PLANT FLOW DIAGRAM SOLIDS	DRAWING NUMBER G005 SHEET 7 OF 343

C:\JOSE\Goleta\101122\NoSeal\ 00G-005.dwg 11/22/10 15:24

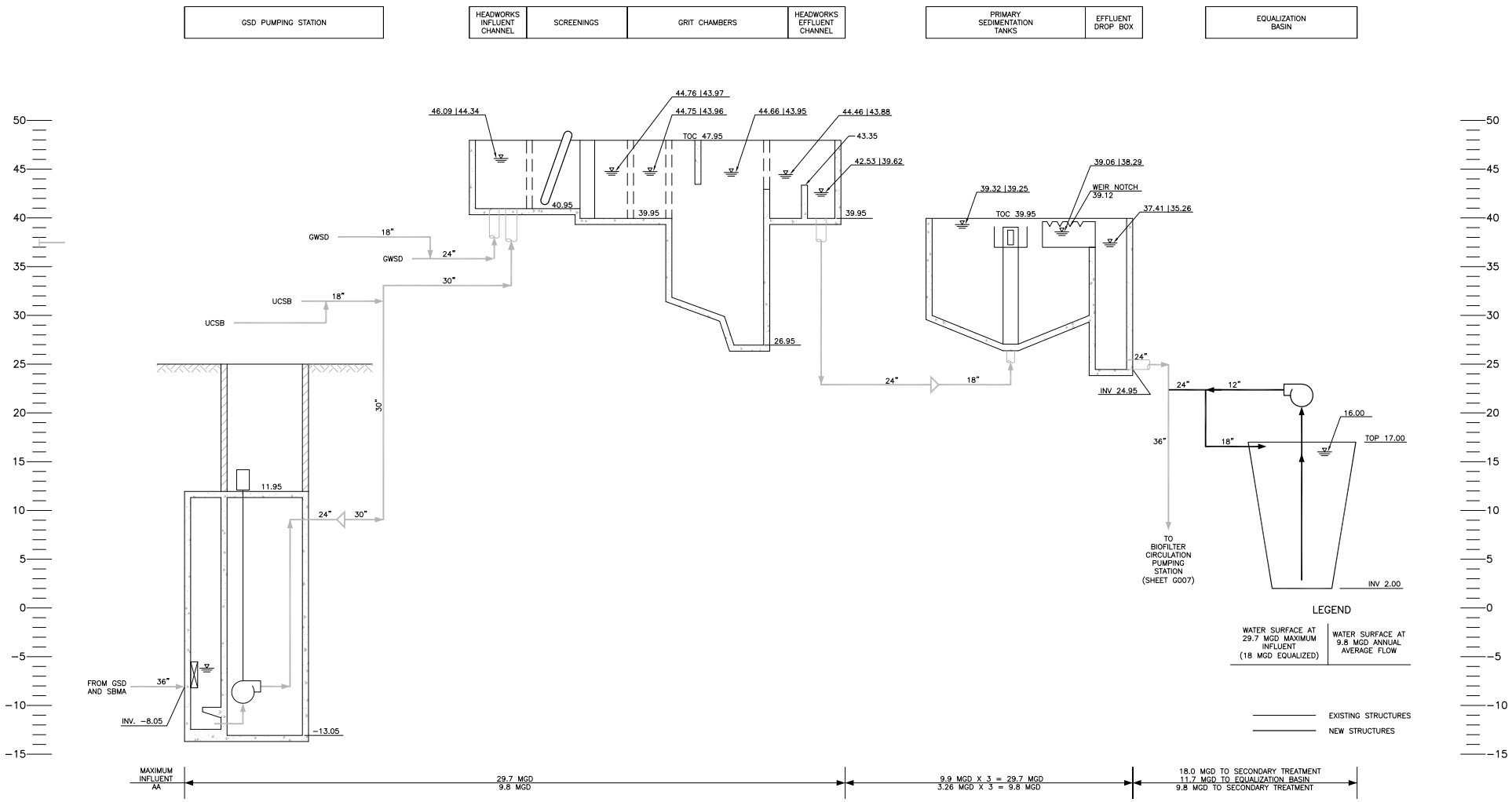

HDR Engineering, Inc.
3230 El Camino Real
Suite 200
Irvine, Ca. 92602-1377

DESIGNED CB
DRAWN NK
CHECKED GG

SUBMITTED _____ DATE _____
APPROVED _____ DATE _____

FILE –
DATE –

GOLETA SANITARY DISTRICT
APPROVED _____ DATE _____
GENERAL MANAGER / DISTRICT ENGINEER RCE No. 18109

VERIFY SCALE
BAR IS ONE INCH ON ORIGINAL DRAWING.
0 1
IF NOT ONE INCH ON THIS SHEET, ADJUST SCALE ACCORDINGLY.

WASTEWATER TREATMENT PLANT UPGRADING

HYDRAULIC PROFILE I

DRAWING NUMBER **G006**
SHEET 8 OF 343

C:\JOSE\Goleta\101122\NoSeal\ 00G-006.dwg 11/22/10 15:24

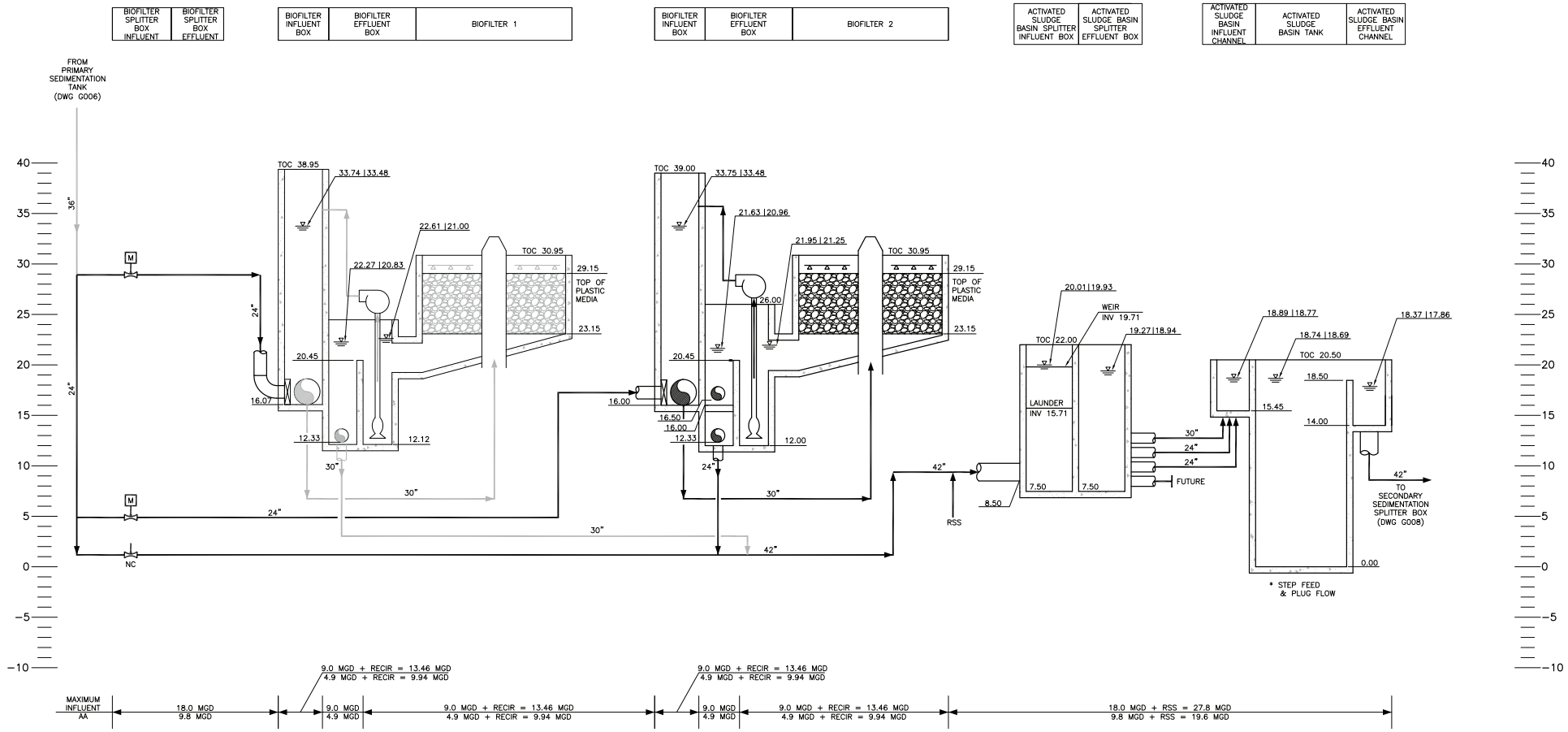

LEGEND

WATER SURFACE AT 29.7 MGD MAXIMUM INFLUENT (18 MGD EQUALIZED)	WATER SURFACE AT 9.8 MGD ANNUAL AVERAGE FLOW

EXISTING STRUCTURES
NEW STRUCTURES

HDR Engineering, Inc. 3230 El Camino Real Suite 200 Irvine, Ca. 92602-1377	DESIGNED CB DRAWN NK CHECKED GG	SUBMITTED ____ DATE ____ APPROVED ____ DATE ____	FILE – DATE –	GOLETA SANITARY DISTRICT APPROVED ____ DATE ____ GENERAL MANAGER / DISTRICT ENGINEER RCE No. 18109	VERIFY SCALE BAR IS ONE INCH ON ORIGINAL DRAWING. IF NOT ONE INCH ON THIS SHEET, ADJUST SCALE ACCORDINGLY.	WASTEWATER TREATMENT PLANT UPGRADING	HYDRAULIC PROFILE II	DRAWING NUMBER G007 SHEET 9 OF 343

C:\JOSE\Goleta\101122\NoSeal\ 00G-007.dwg 11/22/10 15:24

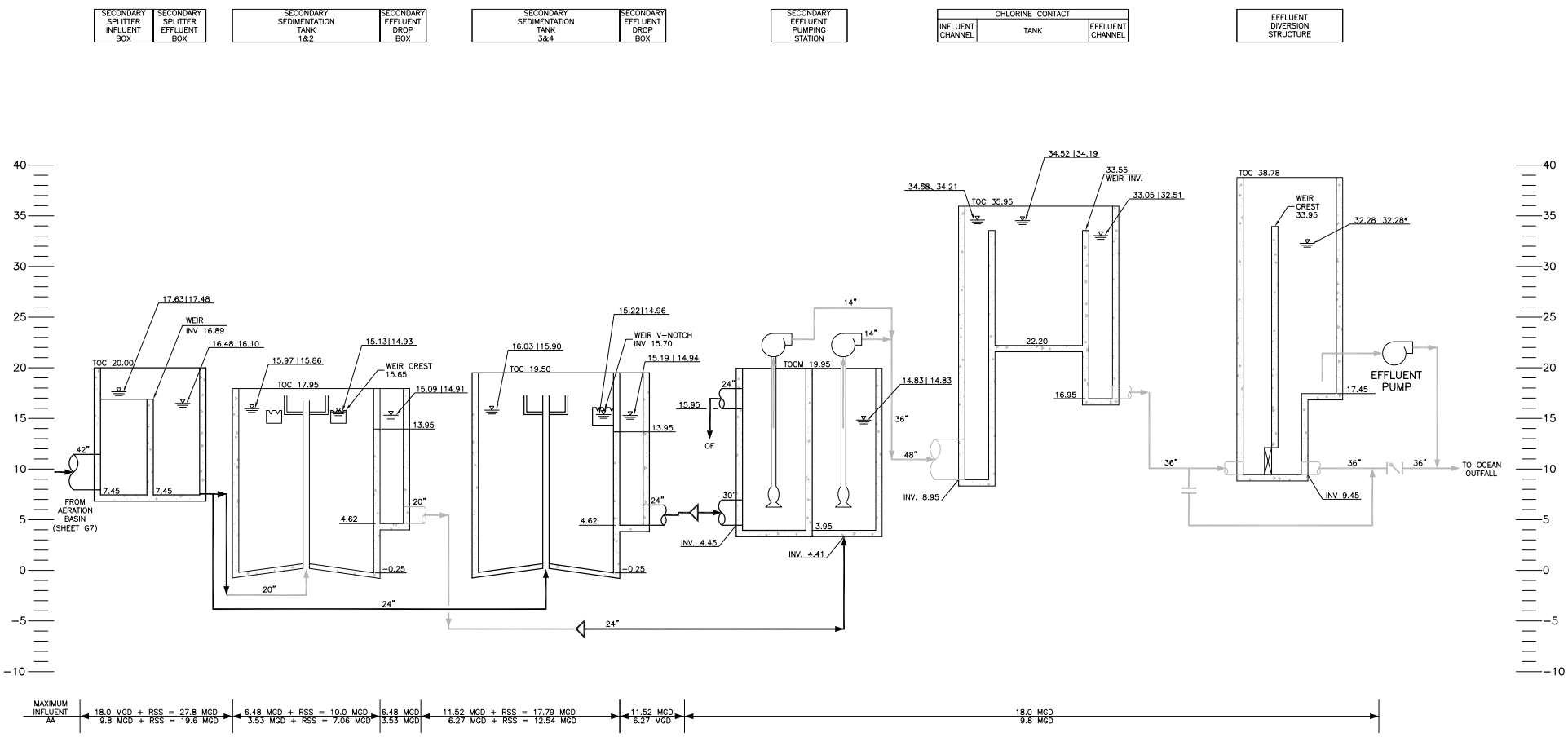

LEGEND

WATER SURFACE AT 29.7 MGD MAXIMUM INFLUENT (18 MGD EQUALIZED)	WATER SURFACE AT 9.8 MGD ANNUAL AVERAGE FLOW

* THIS WATER SURFACE IS THE LEVEL WHICH ACHIEVES NORMAL OPERATION IN THE CCC STRUCTURE. IT IS NOT REPRESENTATIVE OF THE ACTUAL WATER SURFACE.

EXISTING STRUCTURES
NEW STRUCTURES

HDR Engineering, Inc. 3230 El Camino Real Suite 200 Irvine, Ca. 92602-1377	DESIGNED CB DRAWN NK CHECKED GG	SUBMITTED ____ DATE ____ APPROVED ____ DATE ____	FILE – DATE –	GOLETA SANITARY DISTRICT APPROVED ____ DATE ____ GENERAL MANAGER / DISTRICT ENGINEER RCE No. 18109	VERIFY SCALE BAR IS ONE INCH ON ORIGINAL DRAWING. IF NOT ONE INCH ON THIS SHEET, ADJUST SCALE ACCORDINGLY.	WASTEWATER TREATMENT PLANT UPGRADING	HYDRAULIC PROFILE III	DRAWING NUMBER G008 SHEET 10 OF 343

C:\JOSE\Goleta\101122\NoSeal\ 00G-008.dwg 11/22/10 15:24

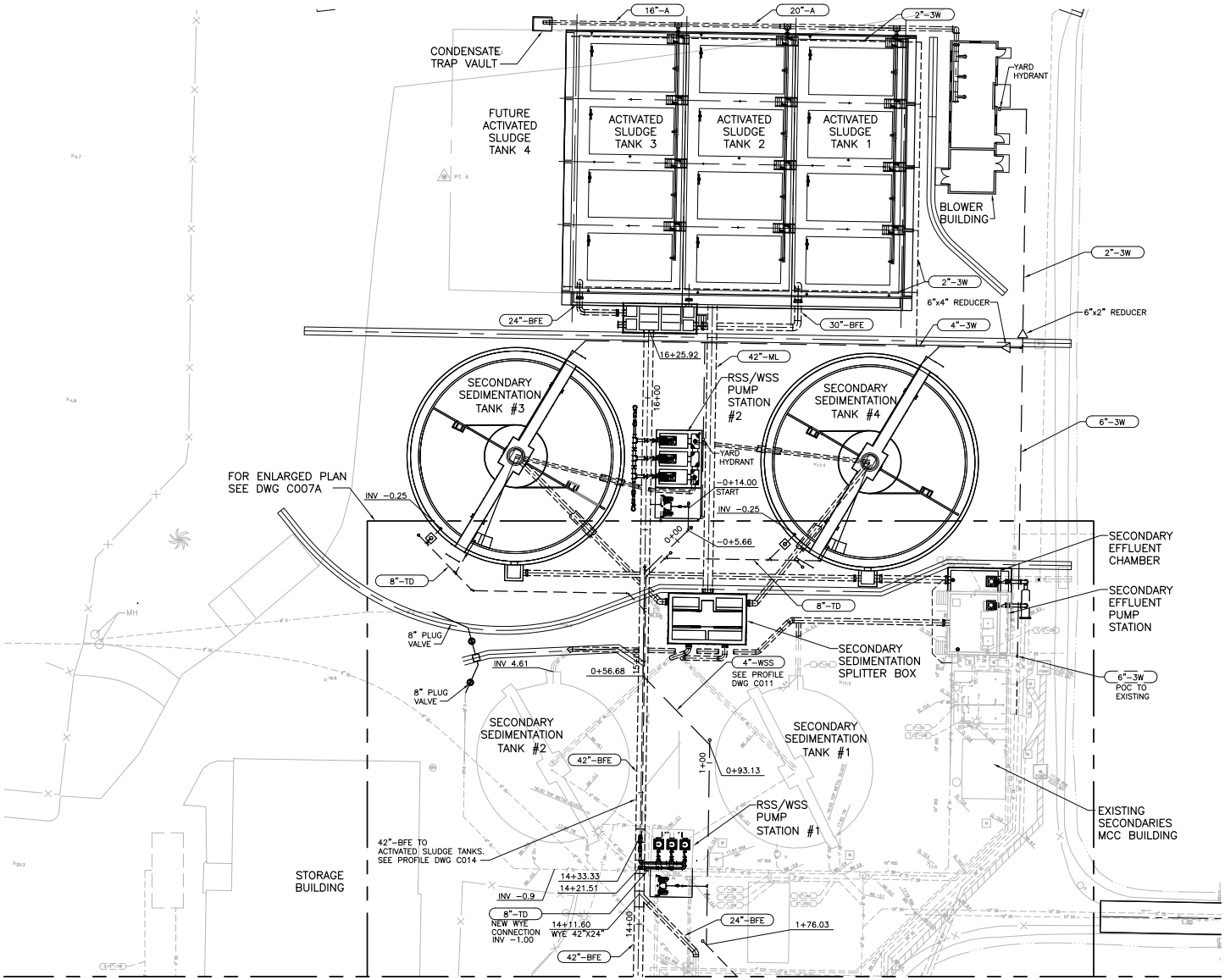

MATCH LINE – SEE SHEET C008 FOR CONTINUATION

YARD PIPING PLAN

1"=20'

GENERAL NOTES:

1. UNLESS NOTED, ALL PIPE SHALL BE MINIMUM 3 FT BELOW GRADE.

HDR Engineering, Inc. 3230 El Camino Real Suite 200 Irvine, Ca. 92602-1377	DESIGNED CB DRAWN SL CHECKED GG	SUBMITTED ____ DATE ____ APPROVED ____ DATE ____	FILE – DATE –	GOLETA SANITARY DISTRICT APPROVED ____ DATE ____ GENERAL MANAGER / DISTRICT ENGINEER RCE No. 18109	VERIFY SCALE BAR IS ONE INCH ON ORIGINAL DRAWING. IF NOT ONE INCH ON THIS SHEET, ADJUST SCALE ACCORDINGLY.	WASTEWATER TREATMENT PLANT UPGRADING	YARD PIPING PLAN I	DRAWING NUMBER C007 SHEET 22 OF 343

C:\PwWorking\SAC\dms94659\ 00C-007.dwg 11/17/10_18:04

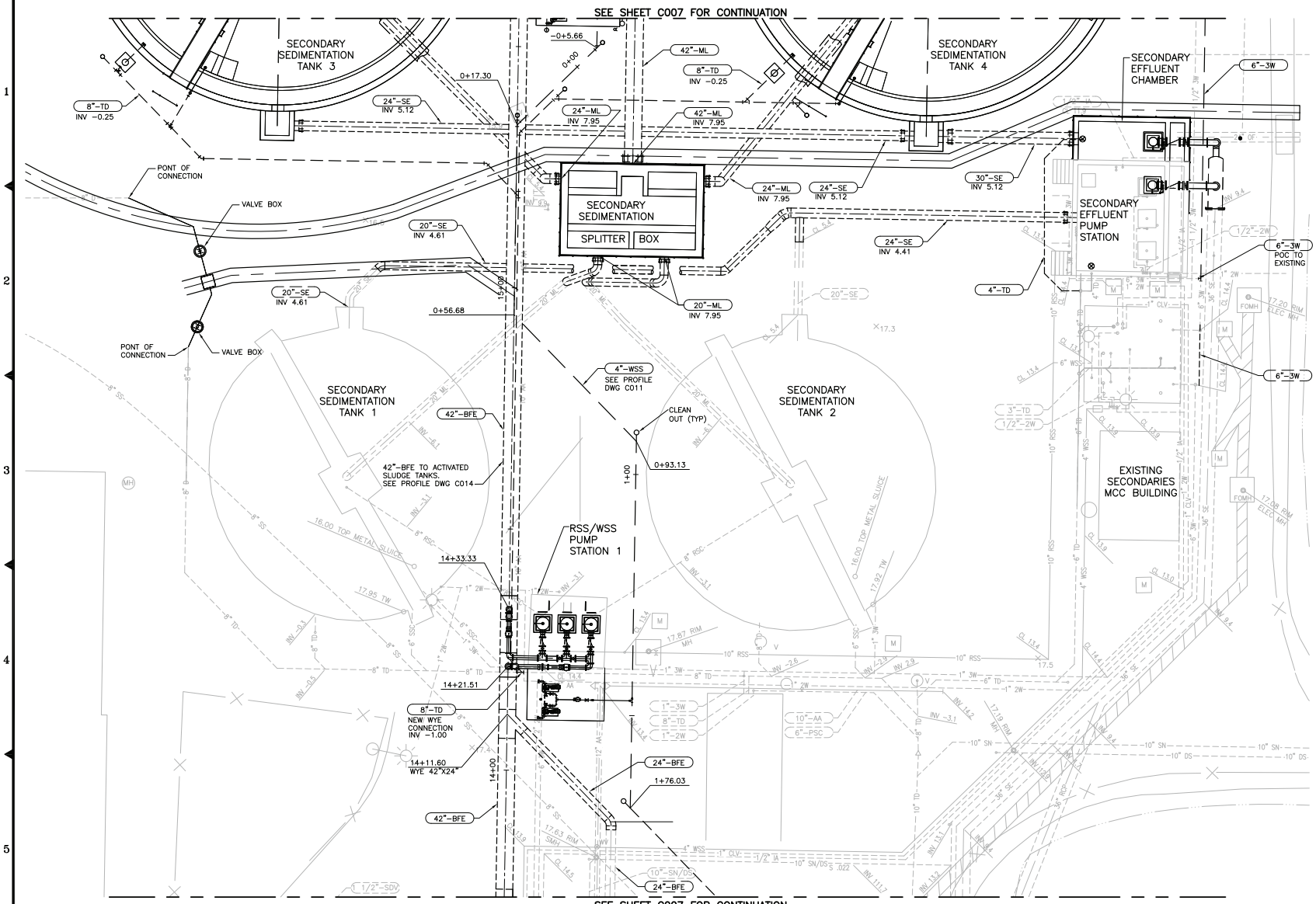

YARD PIPING PLAN
1"=10'

GENERAL NOTES:

1. UNLESS NOTED, ALL BURIED PIPE SHALL BE MINIMUM 3 FT BELOW GRADE.

HDR Engineering, Inc. 3230 El Camino Real Suite 200 Irvine, Ca. 92602-1377	DESIGNED CB DRAWN SL CHECKED GG	SUBMITTED DATE APPROVED DATE	FILE – DATE –	GOLETA SANITARY DISTRICT APPROVED DATE GENERAL MANAGER / DISTRICT ENGINEER RCE No. 18109	VERIFY SCALE BAR IS ONE INCH ON ORIGINAL DRAWING. IF NOT ONE INCH ON THIS SHEET, ADJUST SCALE ACCORDINGLY.	WASTEWATER TREATMENT PLANT UPGRADING	YARD PIPING PLAN I-A	DRAWING NUMBER C007A SHEET 23 OF 343

C:\PwWorking\SAC\dms94659\ 00C-007A.dwg 11/17/10 18:04

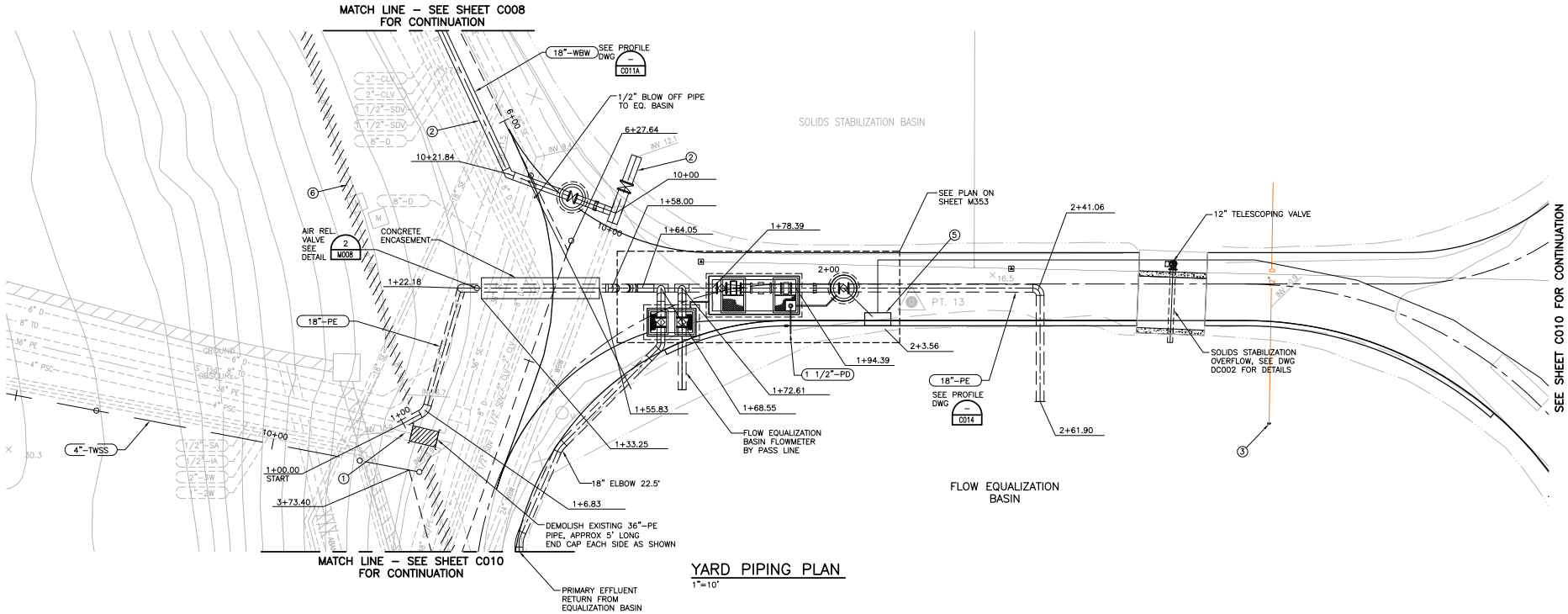

YARD PIPING PLAN

1"=10'

CONSTRUCTION NOTES:

1. CONTRACTOR SHALL COORDINATE WITH PLANT OPERATION MANAGER FOR DISCONNECTING 36"–PE TO 48"–SE/PE AND CONNECTION OF 18"–PE EQUALIZATION BASIN.
2. CONTRACTOR SHALL COORDINATE WITH PLANT OPERATION MANAGER FOR DEMOLISHING 13.5'± EXISTING 24"–WBW PIPE AND CONSTRUCTING 24"x18" TEE WITH GATE VALVES AND 18"–WBW PIPE ALIGNMENT CONNECT TO INFLUENT JUNCTION STRUCTURE.
3. PLUG 12"–D DURING REGRADING OF EQUALIZATION BASIN.
4. CONNECT TO EXISTING 1"–3W TO EQUALIZATION BASIN PUMP STATION HOSE BIB.
5. WATER CANON, SEE DETAIL 1 C010
6. ABANDON IN PLACE 8"–SN DEMOLISH 5FT SECTION AND CAP END.

GENERAL NOTES:

1. UNLESS NOTED, ALL BURIED PIPE SHALL BE MINIMUM 3 FT BELOW GRADE.
2. UNLESS NOTED, ABANDONED IN PLACE PIPING SHALL BE PLUGGED WITH CEMENT SLURRY FOR A MIN. OF 2 FEET.

HDR Engineering, Inc. 3230 El Camino Real Suite 200 Irvine, Ca. 92602-1377	DESIGNED CB DRAWN SL CHECKED GG	SUBMITTED ____ DATE ____ APPROVED ____ DATE ____	FILE – DATE –	GOLETA SANITARY DISTRICT APPROVED ____ DATE ____ GENERAL MANAGER / DISTRICT ENGINEER RCE No. 18109	VERIFY SCALE BAR IS ONE INCH ON ORIGINAL DRAWING. IF NOT ONE INCH ON THIS SHEET, ADJUST SCALE ACCORDINGLY.	WASTEWATER TREATMENT PLANT UPGRADING	YARD PIPING PLAN IV - A	DRAWING NUMBER C010A SHEET 27 OF 343

C:\PwWorking\SAC\dms94659\ 00C-010A.dwg 11/17/10 18:05

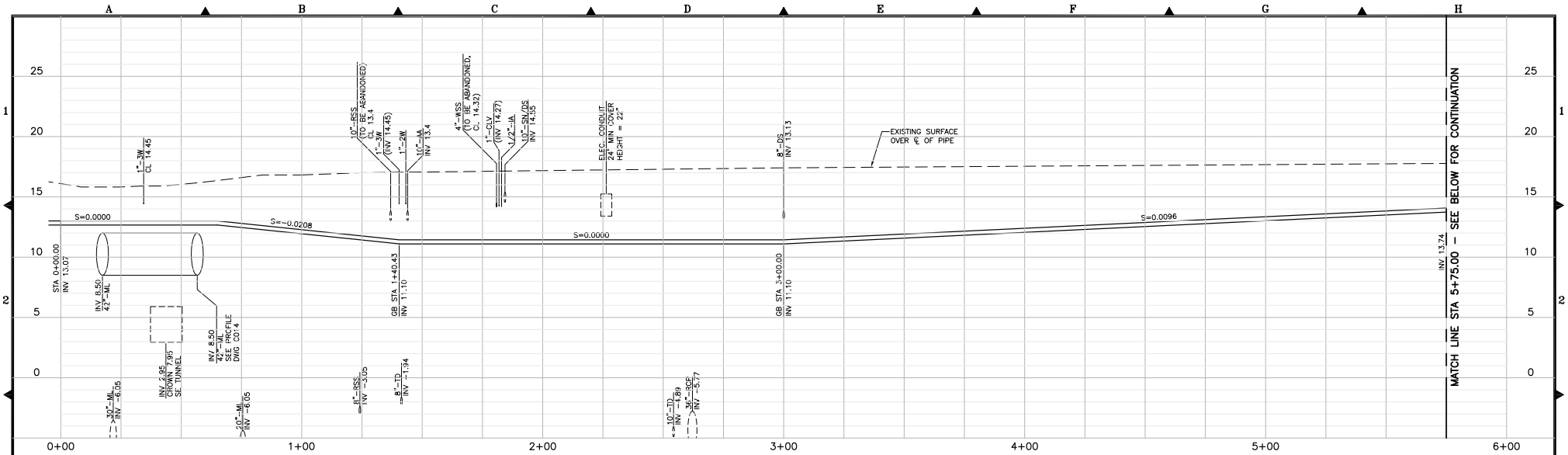

4"–WSS PIPE PROFILE

HORIZ = 1"=20'
VERT = 1"=4'

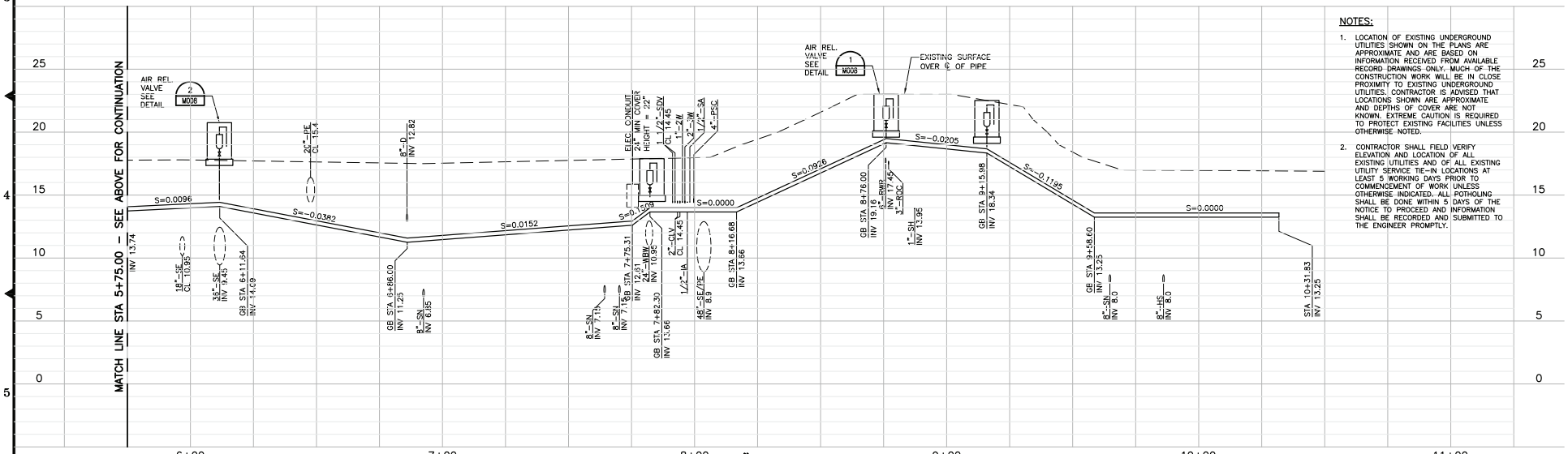

4"–WSS PIPE PROFILE

HORIZ = 1"=20'
VERT = 1"=4'

NOTES:

1. LOCATION OF EXISTING UNDERGROUND UTILITIES SHOWN ON THE PLANS ARE APPROXIMATE AND ARE BASED ON INFORMATION RECEIVED FROM AVAILABLE RECORD DRAWINGS ONLY. MUCH OF THE CONSTRUCTION WORK WILL BE IN CLOSE PROXIMITY TO EXISTING UNDERGROUND UTILITIES. CONTRACTOR IS ADVISED THAT LOCATIONS SHOWN ARE APPROXIMATE AND DEPTHS OF COVER ARE NOT KNOWN. EXTREME CAUTION IS REQUIRED TO PROTECT EXISTING FACILITIES UNLESS OTHERWISE NOTED.
2. CONTRACTOR SHALL FIELD VERIFY ELEVATION AND LOCATION OF ALL EXISTING UTILITIES AND OF ALL EXISTING UTILITY SERVICE TIE–IN LOCATIONS AT LEAST 5 WORKING DAYS PRIOR TO COMMENCEMENT OF WORK UNLESS OTHERWISE INDICATED. ALL POTHOLING SHALL BE DONE WITHIN 5 DAYS OF THE NOTICE TO PROCEED AND INFORMATION SHALL BE RECORDED AND SUBMITTED TO THE ENGINEER PROMPTLY.

HDR Engineering, Inc. 3230 El Camino Real Suite 200 Irvine, Ca. 92602-1377	DESIGNED CB DRAWN SL CHECKED GG	SUBMITTED ____ DATE ____ APPROVED ____ DATE ____	FILE – DATE –	GOLETA SANITARY DISTRICT APPROVED ____ DATE ____ GENERAL MANAGER / DISTRICT ENGINEER RCE No. 18109	VERIFY SCALE BAR IS ONE INCH ON ORIGINAL DRAWING. IF NOT ONE INCH ON THIS SHEET, ADJUST SCALE ACCORDINGLY.	WASTEWATER TREATMENT PLANT UPGRADING	YARD PIPING PROFILE I	DRAWING NUMBER C011 SHEET 28 OF 343

C:\PwWorking\SAC\dms94659\ 00C–011.dwg 11/17/10_18:05

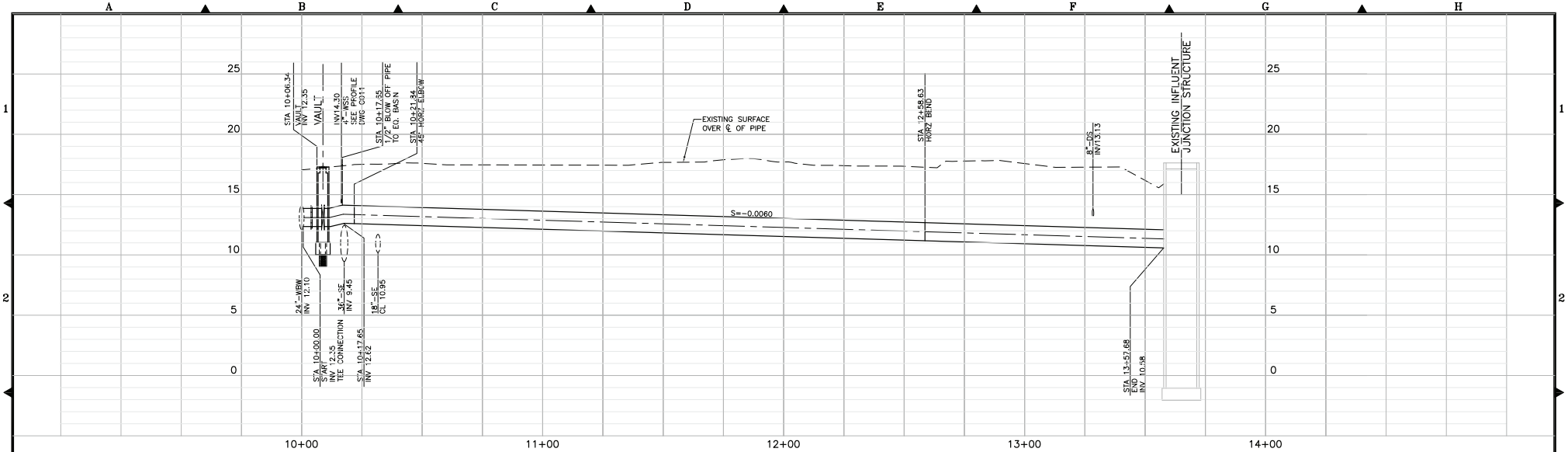

18"-WBW PIPE PROFILE

HORIZ = 1"=20'
VERT = 1"=4'

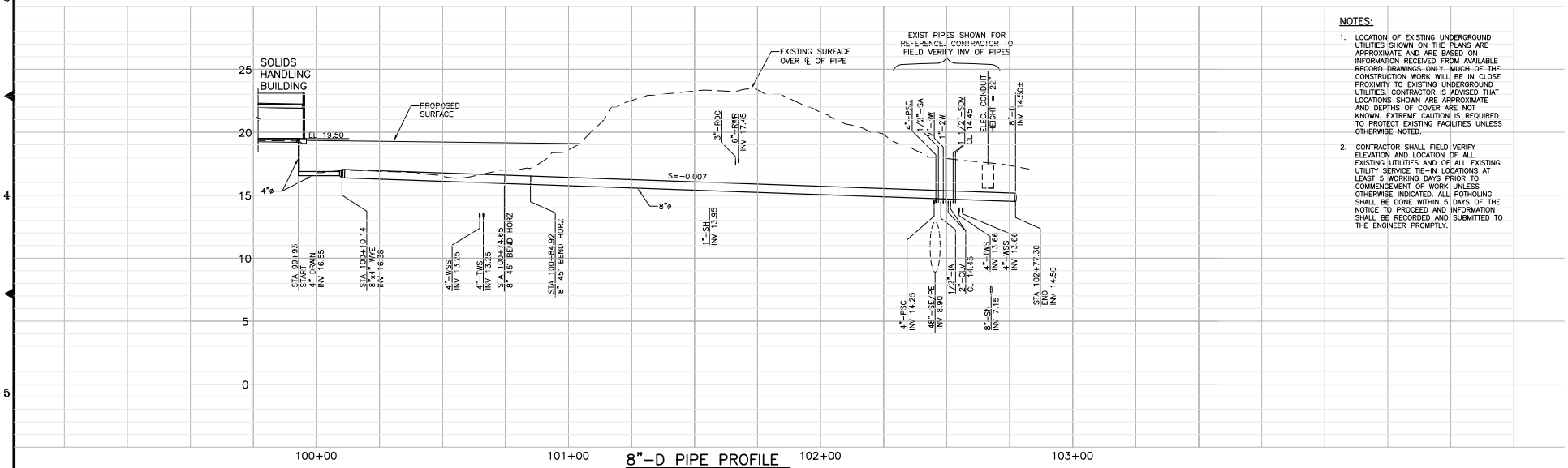

8"-D PIPE PROFILE

HORIZ = 1"=20'
VERT = 1"=4'

NOTES:

1. LOCATION OF EXISTING UNDERGROUND UTILITIES SHOWN ON THE PLANS ARE APPROXIMATE AND ARE BASED ON INFORMATION RECEIVED FROM AVAILABLE RECORD DRAWINGS ONLY. MUCH OF THE CONSTRUCTION WORK WILL BE IN CLOSE PROXIMITY TO EXISTING UNDERGROUND UTILITIES. CONTRACTOR IS ADVISED THAT LOCATIONS SHOWN ARE APPROXIMATE AND DEPTHS OF COVER ARE NOT KNOWN. EXTREME CAUTION IS REQUIRED TO PROTECT EXISTING FACILITIES UNLESS OTHERWISE NOTED.
2. CONTRACTOR SHALL FIELD VERIFY ELEVATION AND LOCATION OF ALL EXISTING UTILITIES AND OF ALL EXISTING UTILITY SERVICE TIE-IN LOCATIONS AT LEAST 5 WORKING DAYS PRIOR TO COMMENCEMENT OF WORK UNLESS OTHERWISE INDICATED. ALL POTHOLING SHALL BE DONE WITHIN 5 DAYS OF THE NOTICE TO PROCEED AND INFORMATION SHALL BE RECORDED AND SUBMITTED TO THE ENGINEER PROMPTLY.

HDR Engineering, Inc. 3230 El Camino Real Suite 200 Irvine, Ca. 92602-1377	DESIGNED CB DRAWN SL CHECKED GG	SUBMITTED _____ DATE _____ APPROVED _____ DATE _____	FILE – DATE –	GOLETA SANITARY DISTRICT APPROVED _____ DATE _____ GENERAL MANAGER / DISTRICT ENGINEER RCE No. 18109	VERIFY SCALE BAR IS ONE INCH ON ORIGINAL DRAWING. IF NOT ONE INCH ON THIS SHEET, ADJUST SCALE ACCORDINGLY.	WASTEWATER TREATMENT PLANT UPGRADING	YARD PIPING PROFILE I - A	DRAWING NUMBER C011A SHEET 29 OF 343

C:\PwWorking\SAC\dms94659\ 00C-011A.dwg 11/17/10_18:05

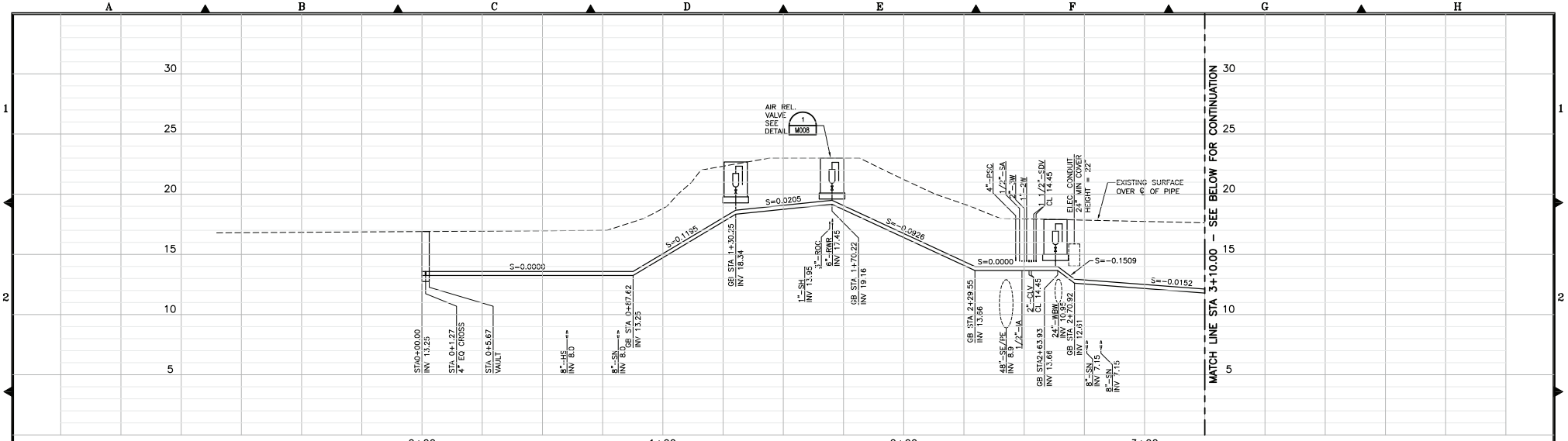

4"-TWS PIPE PROFILE

HORIZ = 1"=20'
VERT = 1"=4'

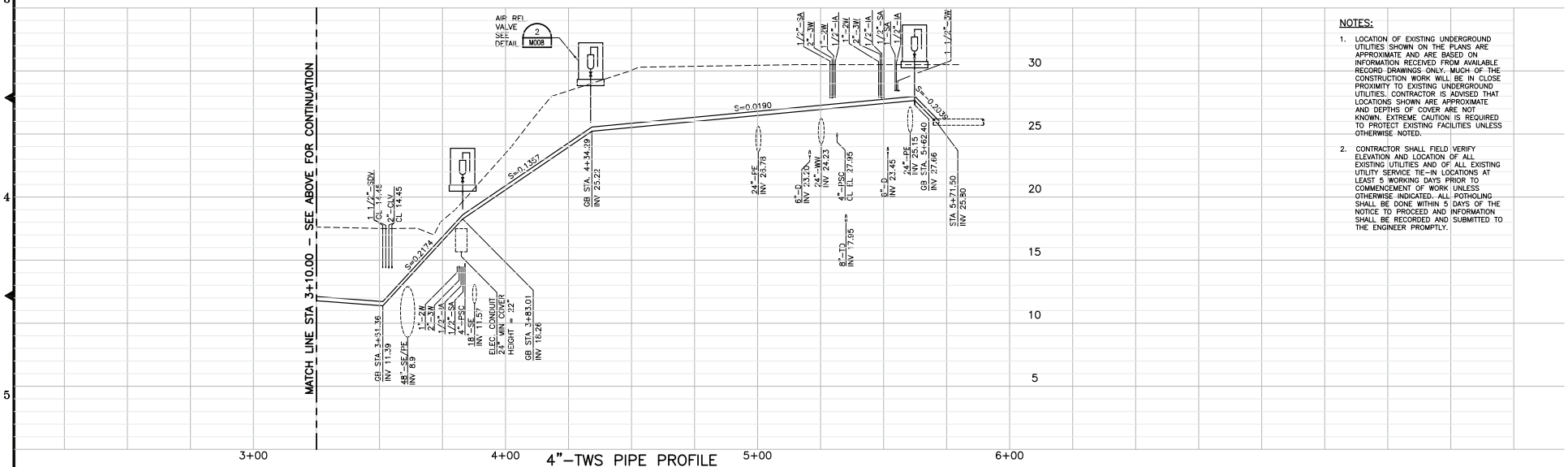

4"-TWS PIPE PROFILE

HORIZ = 1"=20'
VERT = 1"=4'

NOTES:

1. LOCATION OF EXISTING UNDERGROUND UTILITIES SHOWN ON THE PLANS ARE APPROXIMATE AND ARE BASED ON INFORMATION RECEIVED FROM AVAILABLE RECORD DRAWINGS ONLY. MUCH OF THE CONSTRUCTION WORK WILL BE IN CLOSE PROXIMITY TO EXISTING UNDERGROUND UTILITIES. CONTRACTOR IS ADVISED THAT LOCATIONS SHOWN ARE APPROXIMATE AND DEPTHS OF COVER ARE NOT KNOWN. EXTREME CAUTION IS REQUIRED TO PROTECT EXISTING FACILITIES UNLESS OTHERWISE NOTED.

2. CONTRACTOR SHALL FIELD VERIFY ELEVATION AND LOCATION OF ALL EXISTING UTILITIES AND OF ALL EXISTING UTILITY SERVICE TIE-IN LOCATIONS AT LEAST 5 WORKING DAYS PRIOR TO COMMENCEMENT OF WORK UNLESS OTHERWISE INDICATED. ALL POTHOLING SHALL BE DONE WITHIN 5 DAYS OF THE NOTICE TO PROCEED AND INFORMATION SHALL BE RECORDED AND SUBMITTED TO THE ENGINEER PROMPTLY.

HDR Engineering, Inc. 3230 El Camino Real Suite 200 Irvine, Ca. 92602-1377	DESIGNED CB DRAWN SL CHECKED GG	SUBMITTED _____ DATE _____ APPROVED _____ DATE _____	FILE – DATE –	GOLETA SANITARY DISTRICT APPROVED _____ DATE _____ GENERAL MANAGER / DISTRICT ENGINEER RCE No. 18109	VERIFY SCALE BAR IS ONE INCH ON ORIGINAL DRAWING. IF NOT ONE INCH ON THIS SHEET, ADJUST SCALE ACCORDINGLY.	WASTEWATER TREATMENT PLANT UPGRADING	YARD PIPING PROFILE II	DRAWING NUMBER C012 SHEET 30 OF 343

C:\PwWorking\SAC\dms94659\ 00C-012.dwg 11/17/10_18:05

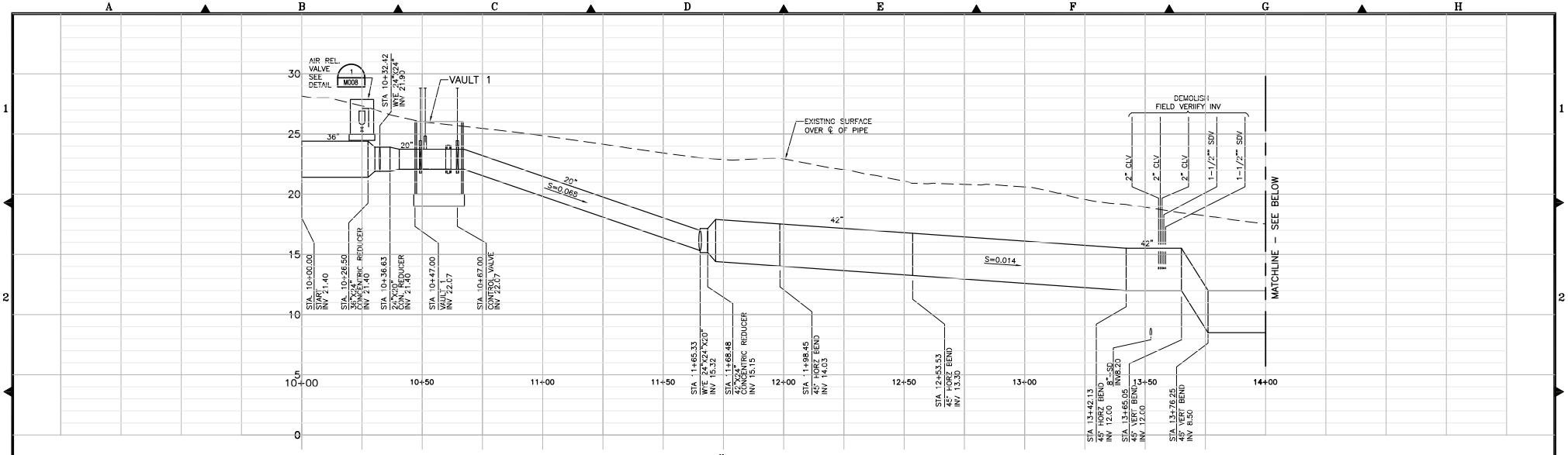

42"-BFE PIPE PROFILE

HORIZ = 1"=20'
VERT = 1"=4'

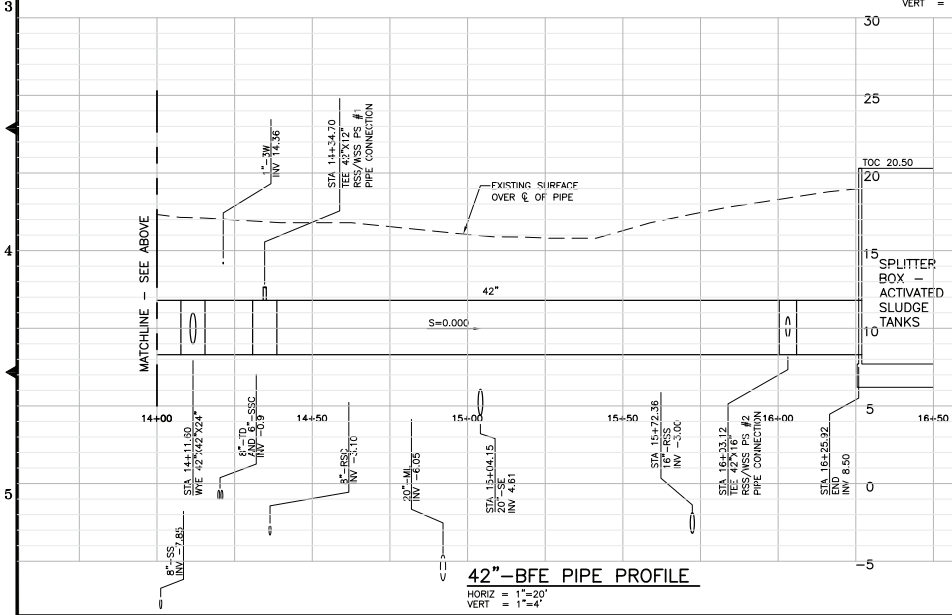

42"-BFE PIPE PROFILE

HORIZ = 1"=20'
VERT = 1"=4'

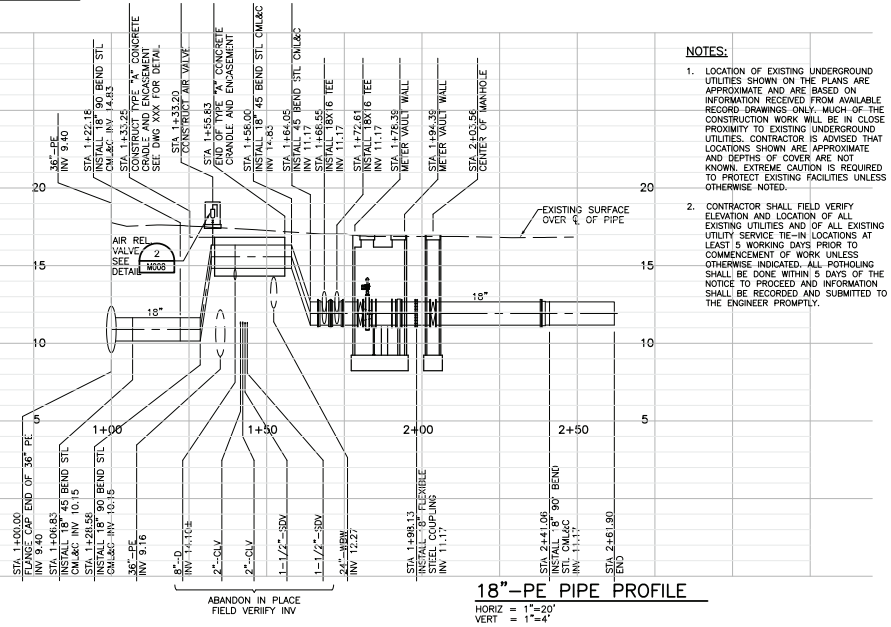

18"-PE PIPE PROFILE

HORIZ = 1"=20'
VERT = 1"=4'

NOTES:

1. LOCATION OF EXISTING UNDERGROUND UTILITIES SHOWN ON THE PLANS ARE APPROXIMATE AND ARE BASED ON INFORMATION RECEIVED FROM AVAILABLE RECORD DRAWINGS ONLY. MUCH OF THE CONSTRUCTION WORK WILL BE IN CLOSE PROXIMITY TO EXISTING UNDERGROUND UTILITIES. CONTRACTOR IS ADVISED THAT LOCATIONS SHOWN ARE APPROXIMATE AND DEPTHS OF COVER ARE NOT KNOWN. EXTREME CAUTION IS REQUIRED TO PROTECT EXISTING FACILITIES UNLESS OTHERWISE NOTED.
2. CONTRACTOR SHALL FIELD VERIFY ELEVATION AND LOCATION OF ALL EXISTING UTILITIES AND OF ALL EXISTING UTILITY SERVICE TIE-IN LOCATIONS AT LEAST 5 WORKING DAYS PRIOR TO COMMENCEMENT OF WORK UNLESS OTHERWISE INDICATED. ALL POTHOLING SHALL BE DONE WITHIN 5 DAYS OF THE NOTICE TO PROCEED AND INFORMATION SHALL BE RECORDED AND SUBMITTED TO THE ENGINEER PROMPTLY.

HDR Engineering, Inc. 3230 El Camino Real Suite 200 Irvine, Ca. 92602-1377	DESIGNED CB DRAWN SL CHECKED GG	SUBMITTED ____ DATE ____ APPROVED ____ DATE ____	FILE – DATE –	GOLETA SANITARY DISTRICT APPROVED ____ DATE ____ GENERAL MANAGER / DISTRICT ENGINEER RCE No. 18109	VERIFY SCALE BAR IS ONE INCH ON ORIGINAL DRAWING. 0 1 2 IF NOT ONE INCH ON THIS SHEET, ADJUST SCALE ACCORDINGLY.	WASTEWATER TREATMENT PLANT UPGRADING	YARD PIPING PROFILE IV

DRAWING NUMBER C014
SHEET 31 OF 343

C:\PwWorking\SAC\dms94659\ 00C-014.dwg 11/17/10_18:05

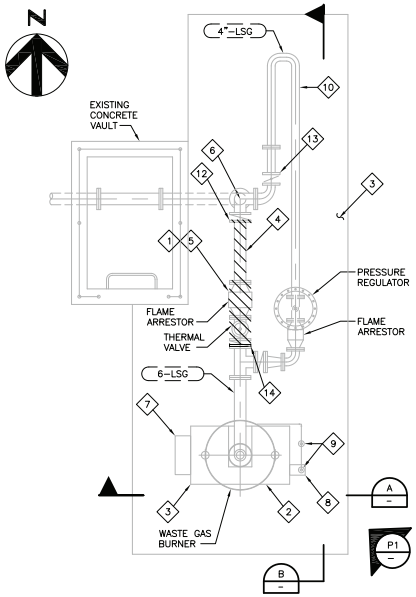

PLAN
SCALE: 3/8" = 1'–0"

PHOTO
NTS

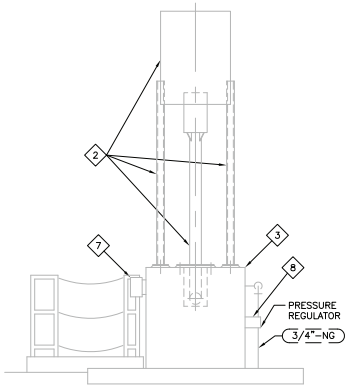

SECTION A
SCALE: 3/8" = 1'–0"

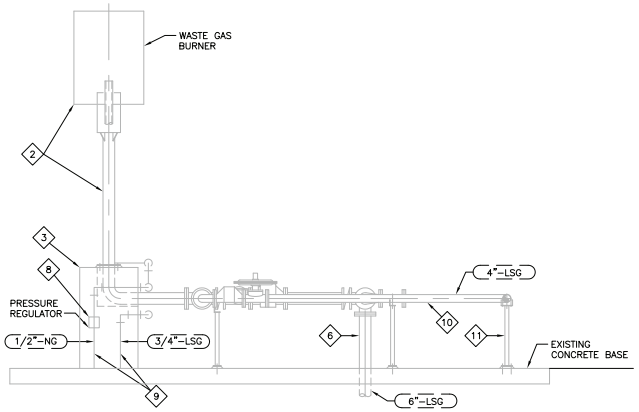

SECTION B
SCALE: 3/8" = 1'–0"

GENERAL NOTES:

1. EXISTING PIPING CONFIGURATION IS BASED ON LIMITED FIELD DATA AND AVAILABLE RECORD DRAWING. CONTRACTOR TO FIELD VERIFY EXISTING WASTE GAS PIPING, VALVING AND CONTROLS PRIOR TO DEMOLITION AND NOTIFY PLANT OPERATIONS MANAGER FOR ITEMS NOT SHOWN ON THE DRAWING.

DEMOLITION NOTES:

1. DEMOLITION SHALL BE COORDINATED WITH CONSTRUCTION MANAGER AND PLANT OPERATIONS MANAGER.
2. PROTECT EXISTING WASTE GAS BURNER AND ASSOCIATED SUPPORTS.
3. PROTECT EXISTING CONCRETE BASE AND PAD.
4. DEMOLISH 6"–LSG TO EXTENT AS SHOWN.
5. DEMOLISH EXISTING FLAME ARRESTOR AND THERMAL VALVE.
6. PROTECT 6–LSG VERTICAL PIPE THROUGH FLOOR IN PLACE.
7. PROTECT EXISTING LOCAL CONTROL PANEL.
8. REPLACE NATURAL GAS PRESSURE REGULATOR WITH NEW ONE.
9. PROTECT EXISTING LSG AND NG LINE.
10. PROTECT 4"–LSG, VALVES, FITTINGS AND EQUIPMENTS.
11. PROTECT PIPE SUPPORTS
12. REMOVE FLANGE FOR NEW PIPE CONNECTION. SEE DWG M604 FOR DETAILS.
13. CLOSE BFV ON 4"–LSG.
14. REMOVE BFV AND END CAP TEE WITH BLIND FLANGE.

LEGEND:

TO BE DEMOLISHED

HDR Engineering, Inc.
3230 El Camino Real
Suite 200
Irvine, Ca. 92602-1377

DESIGNED JW
DRAWN NK
CHECKED GG

SUBMITTED _____ DATE _____
APPROVED _____ DATE _____

FILE –
DATE –

GOLETA SANITARY DISTRICT
APPROVED _____ DATE _____
GENERAL MANAGER / DISTRICT ENGINEER RCE No. 18109

VERIFY SCALE
BAR IS ONE INCH ON ORIGINAL DRAWING.
IF NOT ONE INCH ON THIS SHEET, ADJUST SCALE ACCORDINGLY.

WASTEWATER TREATMENT PLANT UPGRADING

WASTE GAS BURNER
DEMOLITION PLAN & SECTIONS

DRAWING NUMBER DM501
SHEET 60 OF 343

C:\PwWorking\SAC\dms94708\ 500DM–001.dwg 11/17/10_18:06

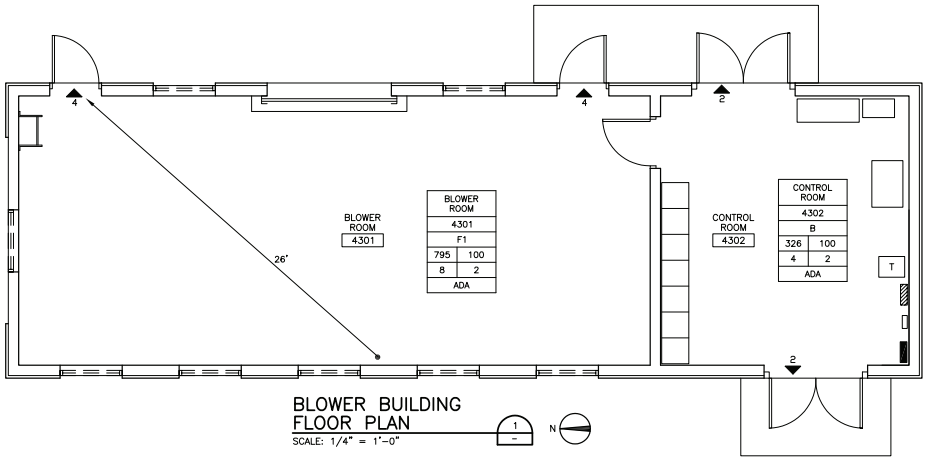

BLOWER BUILDING FLOOR PLAN

SCALE: 1/4" = 1'-0"

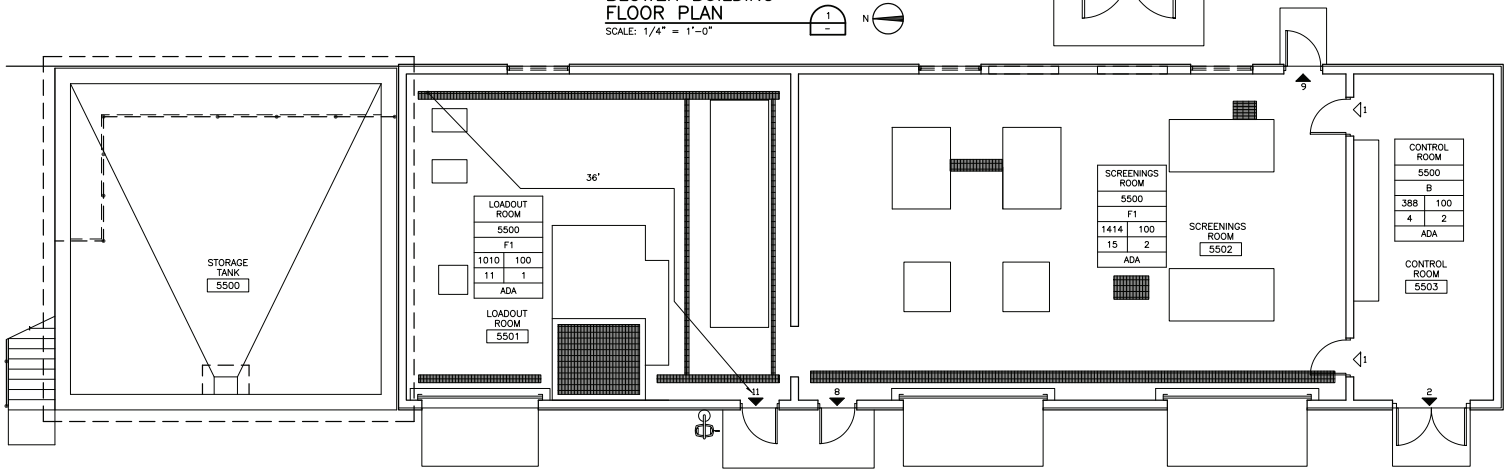

SOLIDS HANDLING BUILDING FLOOR PLAN

SCALE: 3/16" = 1'-0"

CURRENT CODE DATA:

APPLICABLE CODES & STANDARDS:

2007 CALIFORNIA BUILDING CODE
2007 CALIFORNIA FIRE CODE
2007 CALIFORNIA ELEC CODE
2007 CALIFORNIA ENERGY CODE
2007 CALIFORNIA PLUMBING CODE
2007 CALIFORNIA MECHANICAL CODE
OSHA

OCCUPANCY: 2006 CBC CHAPTER 3

F1: FACTORY INDUSTRIAL– MODERATE HAZARD OCCUPANCY

TYPE OF CONSTRUCTION: TABLE 601

TYPE VB
FIRE RESISTANCE PARTITIONS

STRUCTURAL FRAME: 0
BEARING WALLS: 0
NON BEARING WALLS & PARTITION: 0
FLOOR CONSTRUCTION: 0
ROOF CONSTRUCTION: 0

SPRINKLERS:

NON– SPRINKLERED

BUILDING HEIGHT & AREA: TABLE 503

ALLOWABLE:
F1 OCCUPANCY,
1 STORY,
8,500 SF PER STORY

PROVIDED:

BLOWER BUILDING: 1 STORY, 1,121 SF TOTAL
SOLIDS HANDLING BUILDING: 1 STORY, 2,813 SF TOTAL EXCLUDING STORAGE TANK

EXIT ACCESS TRAVEL DISTANCE: TABLE 1016.1

B, F1 OCCUPANCIES W/O SPRINKLER:

REQ'D: 200' MAX

SPACE PROVIDED:

BLOWER BUILDING: 26' MAX
SOLIDS HANDLING BUILDING: 38' MAX

NUMBER OF PLUMBING FIXTURES

PER GOLETA SANITATION DISTRICT DIRECTION, THERE IS NO RESTROOM PROVIDED IN THESE TWO FACILITIES.

RESTROOMS ELSEWHERE ON SITE SHALL CONSTITUTE COMPLIANCE WITH FIXTURE REQUIREMENTS

LEGEND:

BLOWER ROOM		ROOM NAME
4301		ROOM NO.
F		OCCUPANCY
795	100	LOAD FACTOR (2007 CBC TABLE 10–A)
8	1	NO. OF EXITS
NON		ADA/NON–ADA

SQ. FT OF ROOM
NO. OF OCCUPANTS

EXIT OUT OF ROOM ◁ 5 — CUMULATIVE EXIT OCCUPANCY

EXIT OUT OF BLDG ◀ 26 — CUMULATIVE EXIT OCCUPANCY

* NO. OF EXITS BASED ON ELECTRICAL CODE REQUIREMENTS.

HDR Engineering, Inc.
3230 El Camino Real
Suite 200
Irvine, Ca. 92602-1377

DESIGNED SC
DRAWN SL
CHECKED –

SUBMITTED _____ DATE _____
APPROVED _____ DATE _____

FILE –
DATE –

GOLETA SANITARY DISTRICT
APPROVED _____ DATE _____
GENERAL MANAGER / DISTRICT ENGINEER RCE No. 18109

VERIFY SCALE
BAR IS ONE INCH ON ORIGINAL DRAWING.
0 1
IF NOT ONE INCH ON THIS SHEET, ADJUST SCALE ACCORDINGLY.

WASTEWATER TREATMENT PLANT UPGRADING

BLOWER AND SOLIDS HANDLING BUILDING
CODE REVIEW

DRAWING NUMBER A002

C:\PwWorking\SAC\d0143619\ A002.dwg 11/17/10_18:06

ROOM FINISH SCHEDULE

MARK	ROOM NAME	FLOOR MAT'L	FLOOR FINISH	BASE	WALLS MAT'L	WALLS FINISH	CEILING MAT'L	CEILING FINISH	HEIGHT	REMARKS
4301	BLOWER ROOM	CONC.	SEALER	PAINT	CONC.	PAINT	EXP. STRUCT.	PAINT	VARIES	
4302	CONTROL ROOM	CONC.	SEALER	PAINT	CONC.	PAINT	EXP. STRUCT.	PAINT	VARIES	
5500	STORAGE-TANK ROOM	CONC.	SEALER	PAINT	CONC.	PAINT	EXP. STRUCT.	PAINT	VARIES	
5501	POLYMER ROOM	CONC.	SEALER	PAINT	CONC.	PAINT	EXP. STRUCT.	PAINT	VARIES	
5502	DEWATERING ROOM	CONC.	SEALER	PAINT	CONC.	PAINT	EXP. STRUCT.	PAINT	VARIES	
5503	ELECTRICAL ROOM	CONC.	SEALER	PAINT	CONC.	PAINT	EXP. STRUCT.	PAINT	VARIES	

DOOR SCHEDULE

MARK	SIZE	DOOR TYPE	DOOR MAT'L	DOOR FINISH	FRAME TYPE	FRAME MAT'L	FRAME FINISH	DETAILS HEAD	DETAILS JAMB	DETAILS THRESH.	HDWR.	LABEL	REMARKS
D-4301A	3'-0"x8'-0"	A	ALUM	ANOD.	A	ALUM	ANOD.	9/A006	1&4/A006	9/A006	HW-18		W/ TRANSOM
D-4301B	8'-0"x10'-0"	C	ALUM	ANOD.	–	–	–	8/A006	10/A006	8/A006	–		ROLL-UP DOOR
D-4301C	3'-0"x8'-0"	A	ALUM	ANOD.	A	ALUM	ANOD.	7/A006	1,2,4&5/A006	7/A006	HW-18		W/ TRANSOM
D-4302A	6'-0"x8'-0"	B	ALUM	ANOD.	D	ALUM	ANOD.	13/A006	1/A006	16/A006	HW-7		
D-4302B	6'-0"x8'-0"	B	ALUM	ANOD.	B	ALUM	ANOD.	7/A006	1,2,4&5/A006	7/A006	HW-7		
D-4302C	3'-0"x8'-0"	A	ALUM	ANOD.	A	ALUM	ANOD.	12/A166	14/A166	–	–		
D-5501A	10'-0"x10'-0"	C	ALUM	ANOD.	–	–	–	8/A006	10/A006	8/A006	–		ROLL-UP DOOR
D-5501B	3'-0"x8'-0"	A	ALUM	ANOD.	A	ALUM	ANOD.	7/A006	1,2,4&5/A006	7/A006	HW-18		W/ TRANSOM
D-5502A	3'-0"x8'-0"	A	ALUM	ANOD.	A	ALUM	ANOD.	7/A006	1,2,4&5/A006	7/A006	HW-18		W/ TRANSOM
D-5502B	12'-0"x10'-0"	C	ALUM	ANOD.	–	–	–	8/A006	10/A006	8/A006	–		ROLL-UP DOOR
D-5502C	12'-0"x10'-0"	C	ALUM	ANOD.	–	–	–	8/A006	10/A006	8/A006	–		ROLL-UP DOOR
D-5502D	3'-0"x8'-0"	A	ALUM	ANOD.	A	ALUM	ANOD.	9/A006	1&4/A006	9/A006	HW-18		
D-5503A	6'-0"x8'-0"	B	ALUM	ANOD.	B	ALUM	ANOD.	7/A006	1&4/A006	7/A006	HW-7		
D-5503B	3'-0"x8'-0"	A	ALUM	ANOD.	C	ALUM	ANOD.	13/A006	14/A006	–	HW-4		
D-5503C	3'-0"x8'-0"	A	ALUM	ANOD.	C	ALUM	ANOD.	13/A006	14/A006	–	HW-4		

LOUVER SCHEDULE

MARK	SIZE	TYPE	FRAME MAT'L	FRAME FINISH	DETAILS H	DETAILS J	DETAILS S		REMARKS
LVR-4301A	4'-0" X 7'-4"	A	ALUM	ANOD.	6/A006	3/A006	6/A006		
LVR-4301B	4'-0" X 7'-4"	A	ALUM	ANOD.	6/A006	3/A006	6/A006		
LVR-4301C	4'-0" X 7'-4"	A	ALUM	ANOD.	6/A006	3/A006	6/A006		
LVR-4301D	4'-0" X 7'-4"	A	ALUM	ANOD.	6/A006	3/A006	6/A006		
LVR-4301E	4'-0" X 7'-4"	A	ALUM	ANOD.	6/A006	3/A006	6/A006		
LVR-4301F	4'-0" X 7'-4"	A	ALUM	ANOD.	6/A006	3/A006	6/A006		
LVR-4301G	4'-0" X 7'-4"	A	ALUM	ANOD.	6/A006	3/A006	6/A006		
LVR-4301H	4'-0" X 7'-4"	A	ALUM	ANOD.	6/A006	11/A006	6/A006		
LVR-5501	5'-4" X 5'-4"	B	ALUM	ANOD.	15/A006	3/A006	15/A006		
LVR-5502A	5'-4" X 4'-0"	B	ALUM	ANOD.	15/A006	3/A006	15/A006		
LVR-5502B	5'-4" X 4'-0"	B	ALUM	ANOD.	15/A006	3/A006	15/A006		
LVR-5503	6'-0" X 7'-4"	A	ALUM	ANOD.	15/A006	3/A006	15/A006		

FRAME TYPES

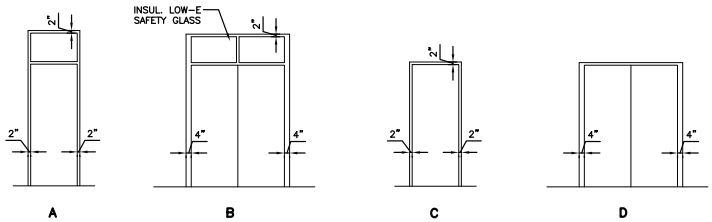

DOOR TYPES

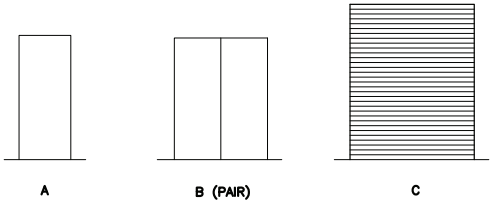

LOUVER TYPE

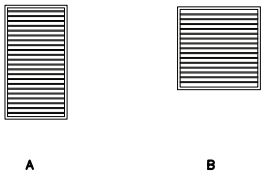

HDR Engineering, Inc.
3230 El Camino Real
Suite 200
Irvine, Ca. 92602-1377

DESIGNED SC
DRAWN SL
CHECKED –

SUBMITTED _____ DATE _____
APPROVED _____ DATE _____

FILE –
DATE –

GOLETA SANITARY DISTRICT
APPROVED _____ DATE _____
GENERAL MANAGER / DISTRICT ENGINEER RCE No. 18109

VERIFY SCALE
BAR IS ONE INCH ON ORIGINAL DRAWING.
0 1
IF NOT ONE INCH ON THIS SHEET, ADJUST SCALE ACCORDINGLY.

WASTEWATER TREATMENT PLANT UPGRADING

BLOWER AND SOLIDS HANDLING BUILDING
SCHEDULES

DRAWING NUMBER **A004**
SHEET 66 OF 343

C:\PwWorking\SAC\d0143619\ A004.dwg 11/17/10_18:06

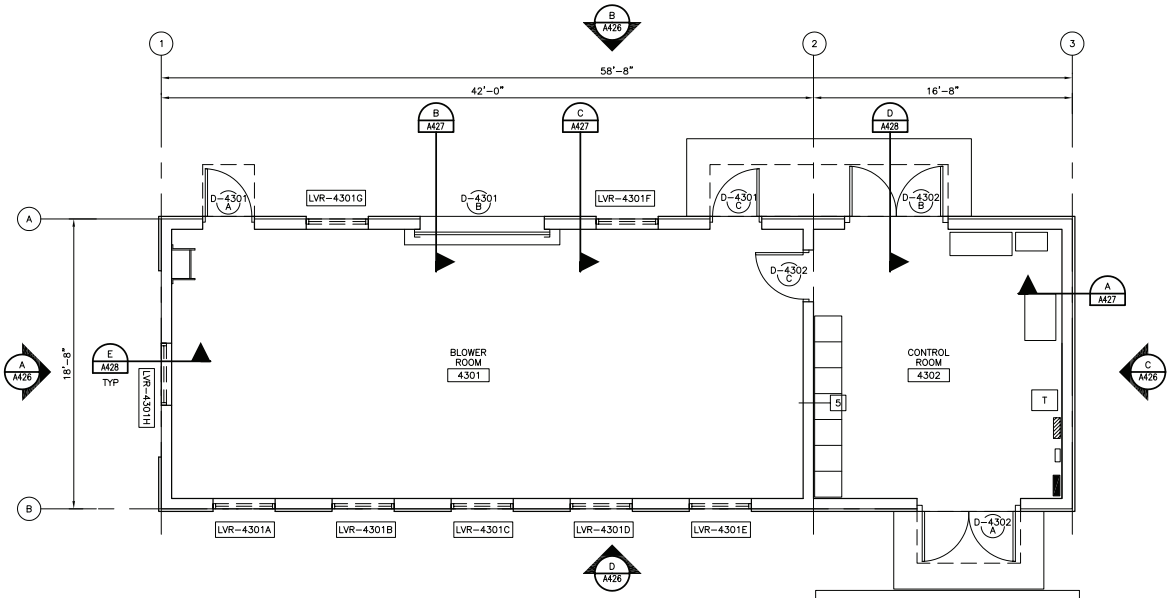

FLOOR PLAN

SCALE: 1/4" = 1'-0"

1 A425

GENERAL NOTES:

1. OVERALL DIMENSIONS ARE TO FACE OF MASONRY. ADD 2" EIFS WHERE OCCURS
2. SEE SHEET A005 FOR INTERIOR WALL TYPES

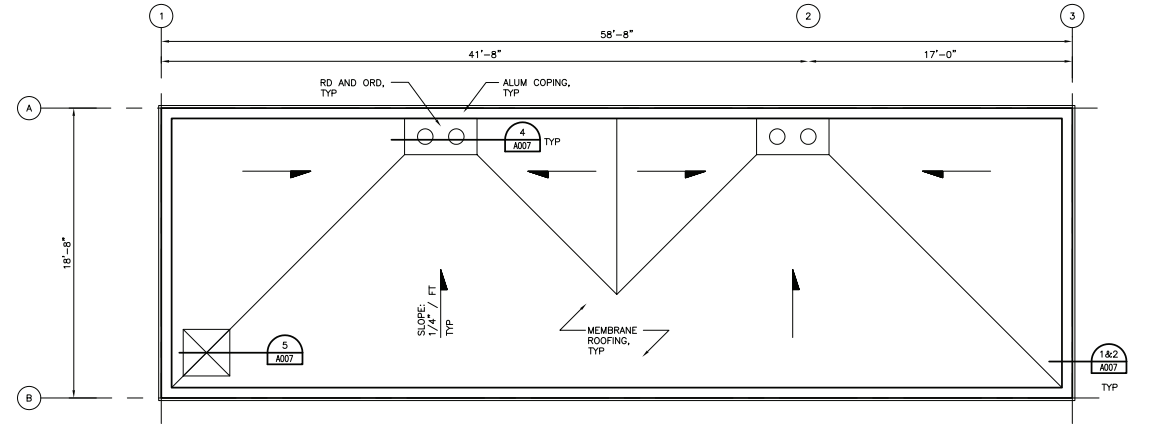

ROOF PLAN

SCALE: 1/4" = 1'-0"

2 A425

GEN NOTE:

1. SEE A005 FOR WALL TYPES.

HDR Engineering, Inc. 3230 El Camino Real Suite 200 Irvine, Ca. 92602-1377	DESIGNED SC DRAWN SL CHECKED –	SUBMITTED ____ DATE ____ APPROVED ____ DATE ____	FILE – DATE –	GOLETA SANITARY DISTRICT APPROVED ____ DATE ____ GENERAL MANAGER / DISTRICT ENGINEER RCE No. 18109	VERIFY SCALE BAR IS ONE INCH ON ORIGINAL DRAWING. IF NOT ONE INCH ON THIS SHEET, ADJUST SCALE ACCORDINGLY.	WASTEWATER TREATMENT PLANT UPGRADING	BLOWER BUILDING FLOOR PLAN & ROOF PLAN	DRAWING NUMBER A425 SHEET 88 OF 343

C:\PwWorking\SAC\d0143619\ A425.dwg 11/17/10_18:08

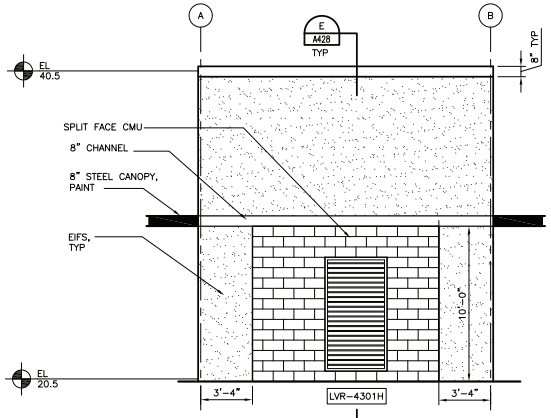

NORTH ELEVATION (A / A425)
SCALE: 1/4" = 1'-0"

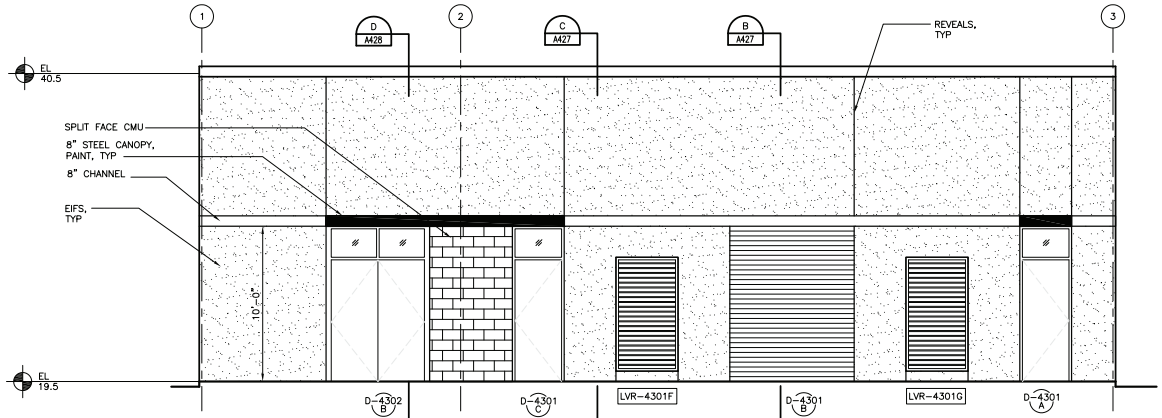

EAST ELEVATION (B / A425)
SCALE: 1/4" = 1'-0"

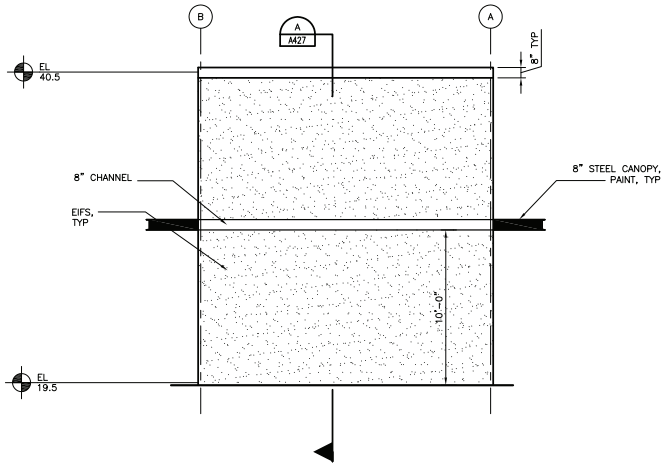

SOUTH ELEVATION (C / A425)
SCALE: 1/4" = 1'-0"

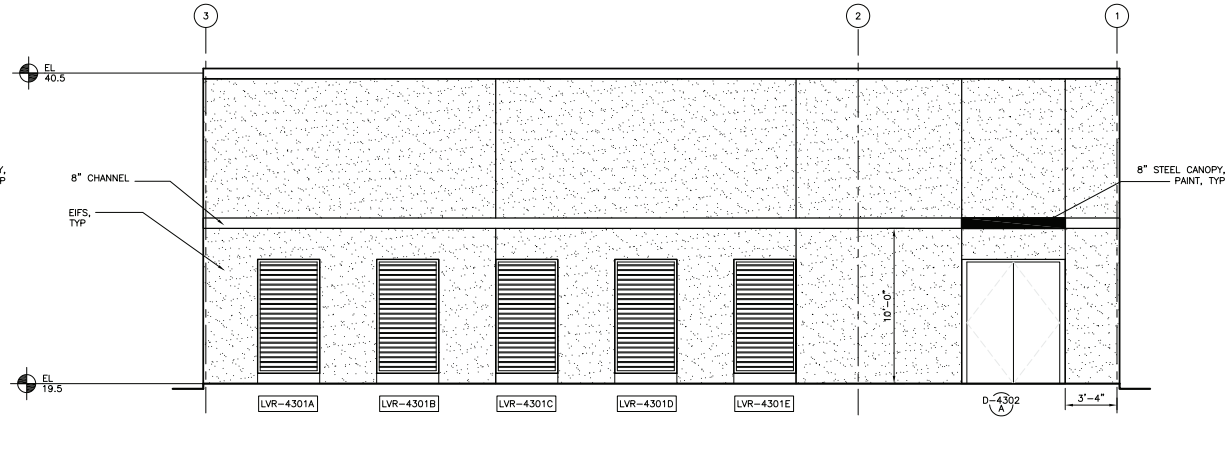

WEST ELEVATION (D / A425)
SCALE: 1/4" = 1'-0"

HDR Engineering, Inc. 3230 El Camino Real Suite 200 Irvine, Ca. 92602-1377	DESIGNED SC DRAWN SL CHECKED –	SUBMITTED _____ DATE _____ APPROVED _____ DATE _____	FILE – DATE –	GOLETA SANITARY DISTRICT APPROVED _____ DATE _____ GENERAL MANAGER / DISTRICT ENGINEER RCE No. 18109	VERIFY SCALE BAR IS ONE INCH ON ORIGINAL DRAWING. IF NOT ONE INCH ON THIS SHEET, ADJUST SCALE ACCORDINGLY.	WASTEWATER TREATMENT PLANT UPGRADING	BLOWER BUILDING EXTERIOR ELEVATIONS

DRAWING NUMBER A426
SHEET 89 OF 343

C:\PwWorking\SAC\d0143619\ A426.dwg 11/17/10_18:08

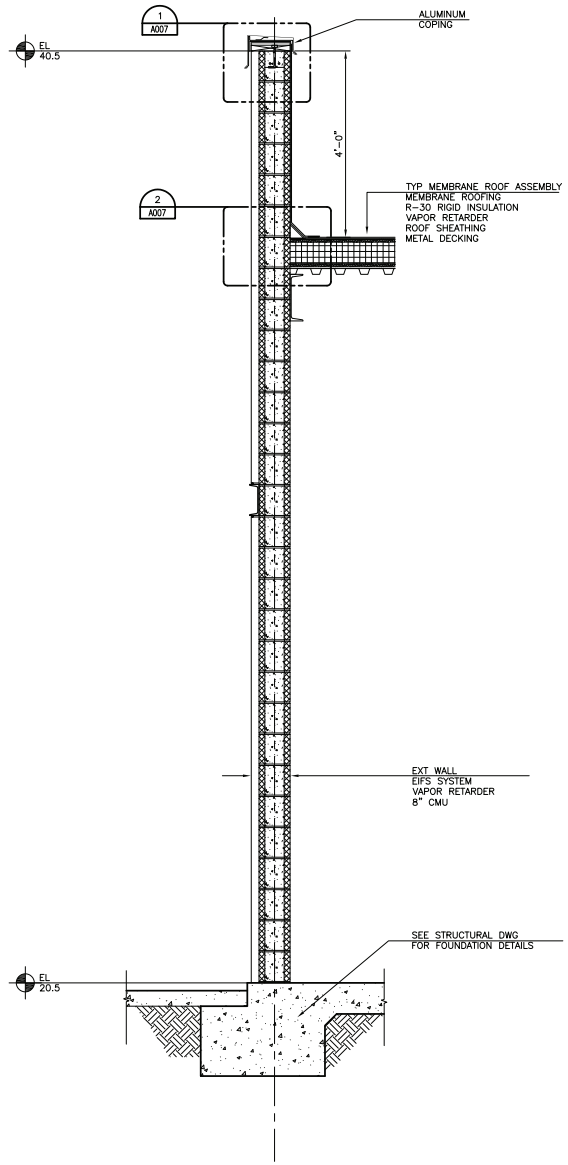

WALL SECTION (A / A426)
SCALE: 3/4"=1'-0"

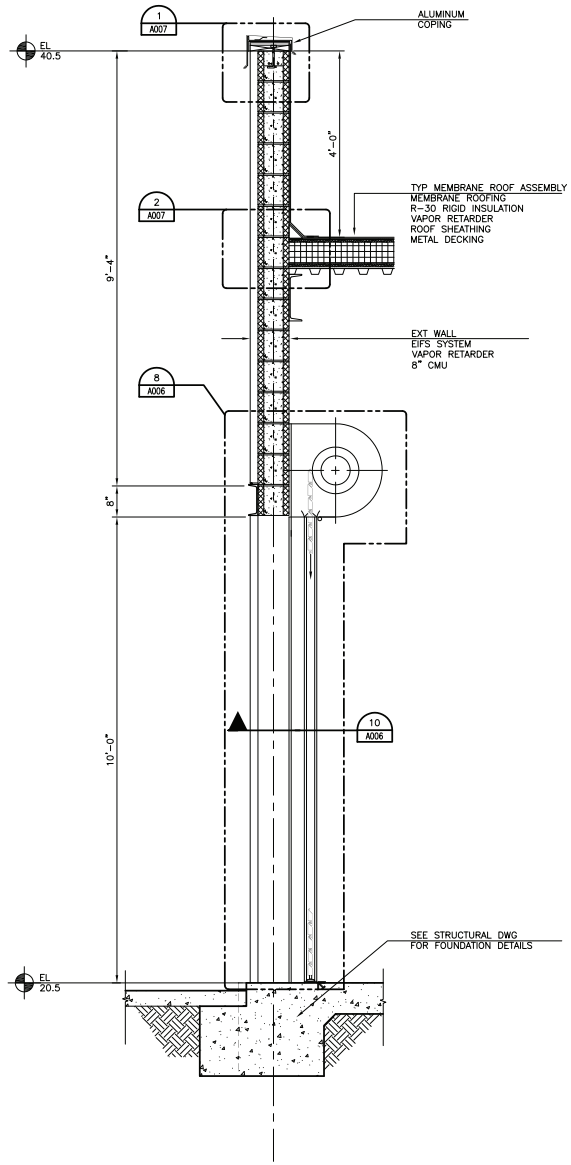

WALL SECTION (B / A426)
SCALE: 3/4"=1'-0"

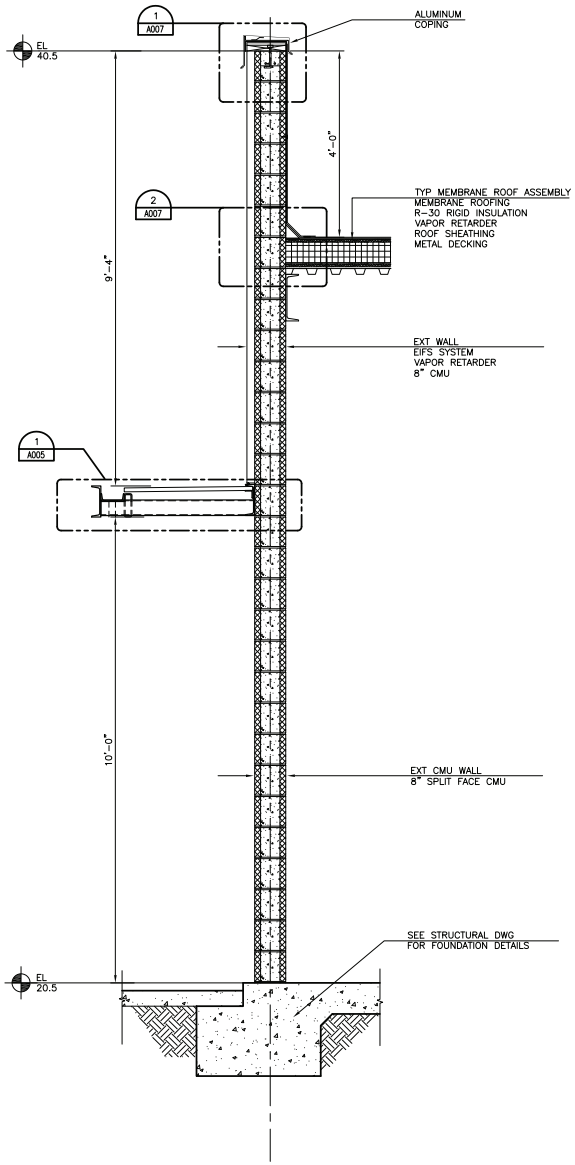

WALL SECTION (C / A426)
SCALE: 3/4"=1'-0"

HDR Engineering, Inc. 3230 El Camino Real Suite 200 Irvine, Ca. 92602-1377	DESIGNED SC DRAWN SL CHECKED –	SUBMITTED ____ DATE ____ APPROVED ____ DATE ____	FILE – DATE –	GOLETA SANITARY DISTRICT APPROVED ____ DATE ____ GENERAL MANAGER / DISTRICT ENGINEER RCE No. 18109	VERIFY SCALE BAR IS ONE INCH ON ORIGINAL DRAWING. IF NOT ONE INCH ON THIS SHEET, ADJUST SCALE ACCORDINGLY.	WASTEWATER TREATMENT PLANT UPGRADING	BLOWER BUILDING WALL SECTIONS DRAWING NUMBER A427 SHEET 90 OF 343

C:\PwWorking\SAC\d0143619\ A427.dwg 11/17/10_18:08

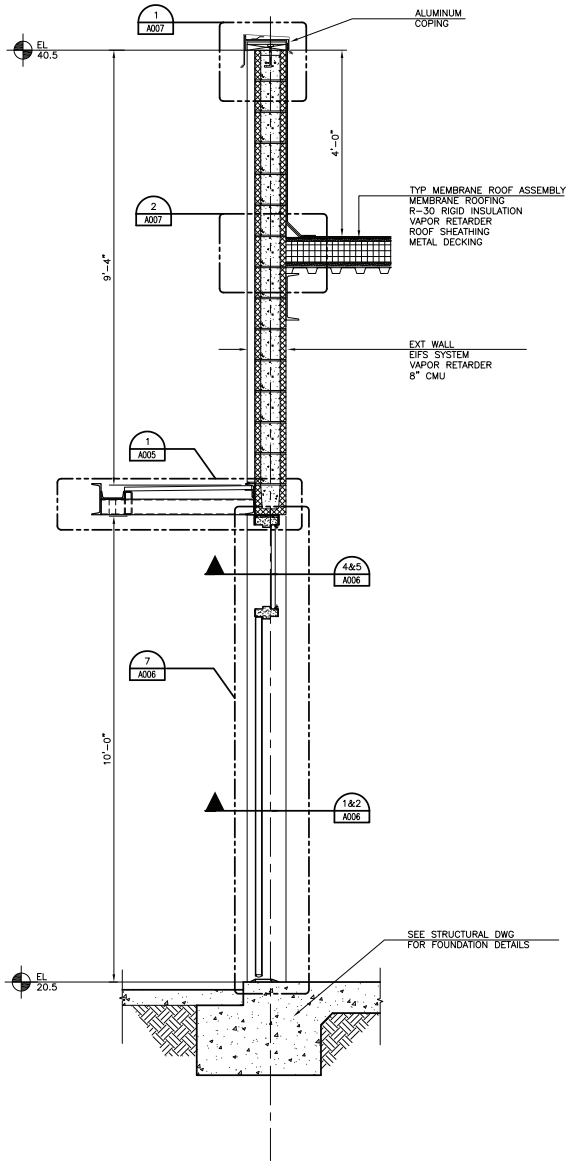

WALL SECTION (D / A426)
SCALE: 3/4"=1'-0"

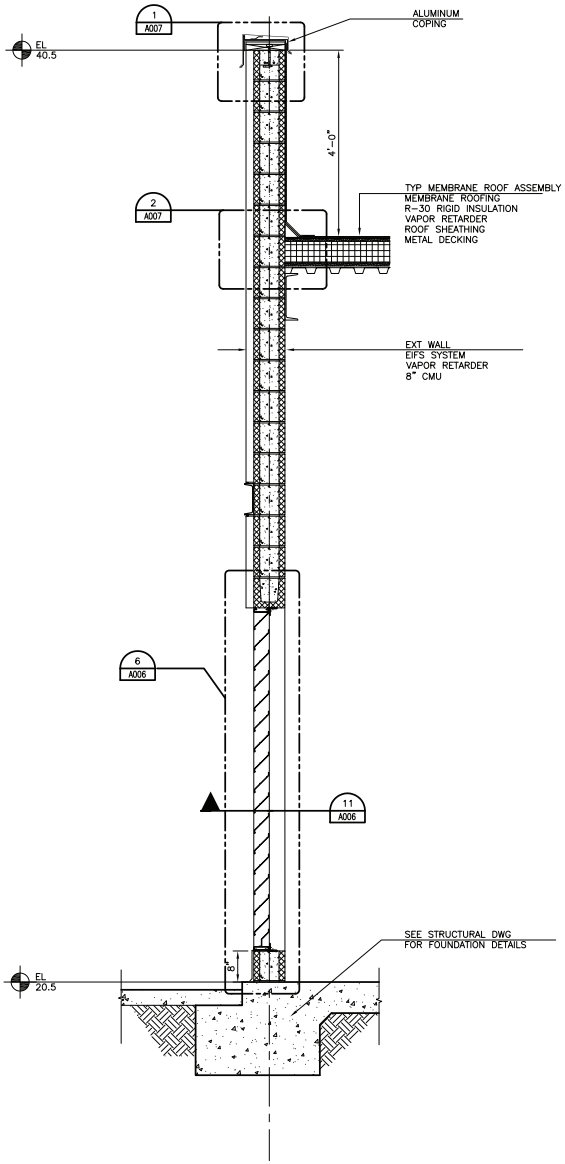

WALL SECTION (E / A426)
SCALE: 3/4"=1'-0"

HDR Engineering, Inc.
3230 El Camino Real
Suite 200
Irvine, Ca. 92602-1377

DESIGNED SC
DRAWN SL
CHECKED –

SUBMITTED _____ DATE _____
APPROVED _____ DATE _____

FILE –
DATE –

GOLETA SANITARY DISTRICT
APPROVED _____ DATE _____
GENERAL MANAGER / DISTRICT ENGINEER RCE No. 18109

VERIFY SCALE
BAR IS ONE INCH ON ORIGINAL DRAWING.
IF NOT ONE INCH ON THIS SHEET, ADJUST SCALE ACCORDINGLY.

WASTEWATER TREATMENT PLANT UPGRADING

BLOWER BUILDING
WALL SECTIONS

DRAWING NUMBER A428
SHEET 91 OF 343

C:\PwWorking\SAC\d0143619\ A428.dwg 11/17/10_18:08

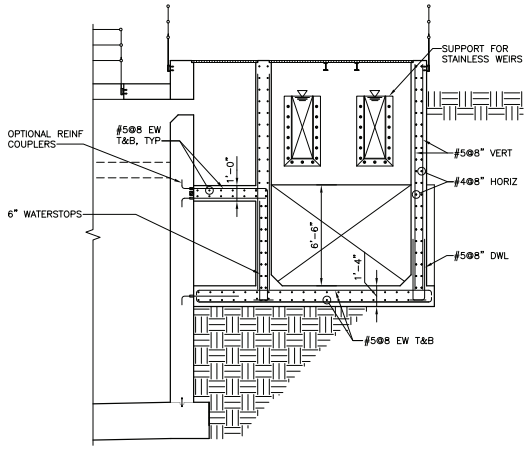

2 SECTION
SCALE: 1/4 = 1'-0"

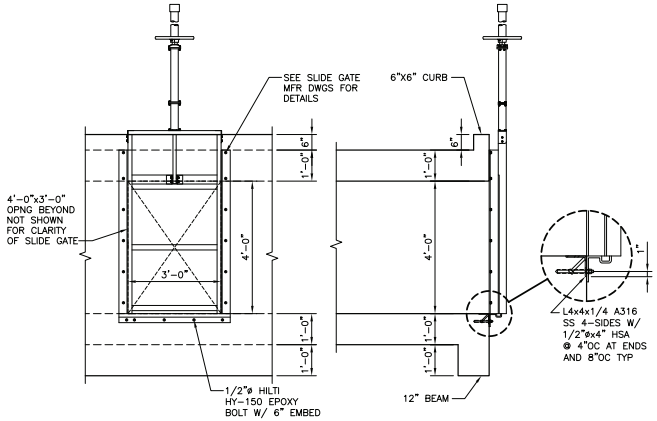

3 SLIDE GATE DETAIL
SCALE: 1/2" = 1'-0"

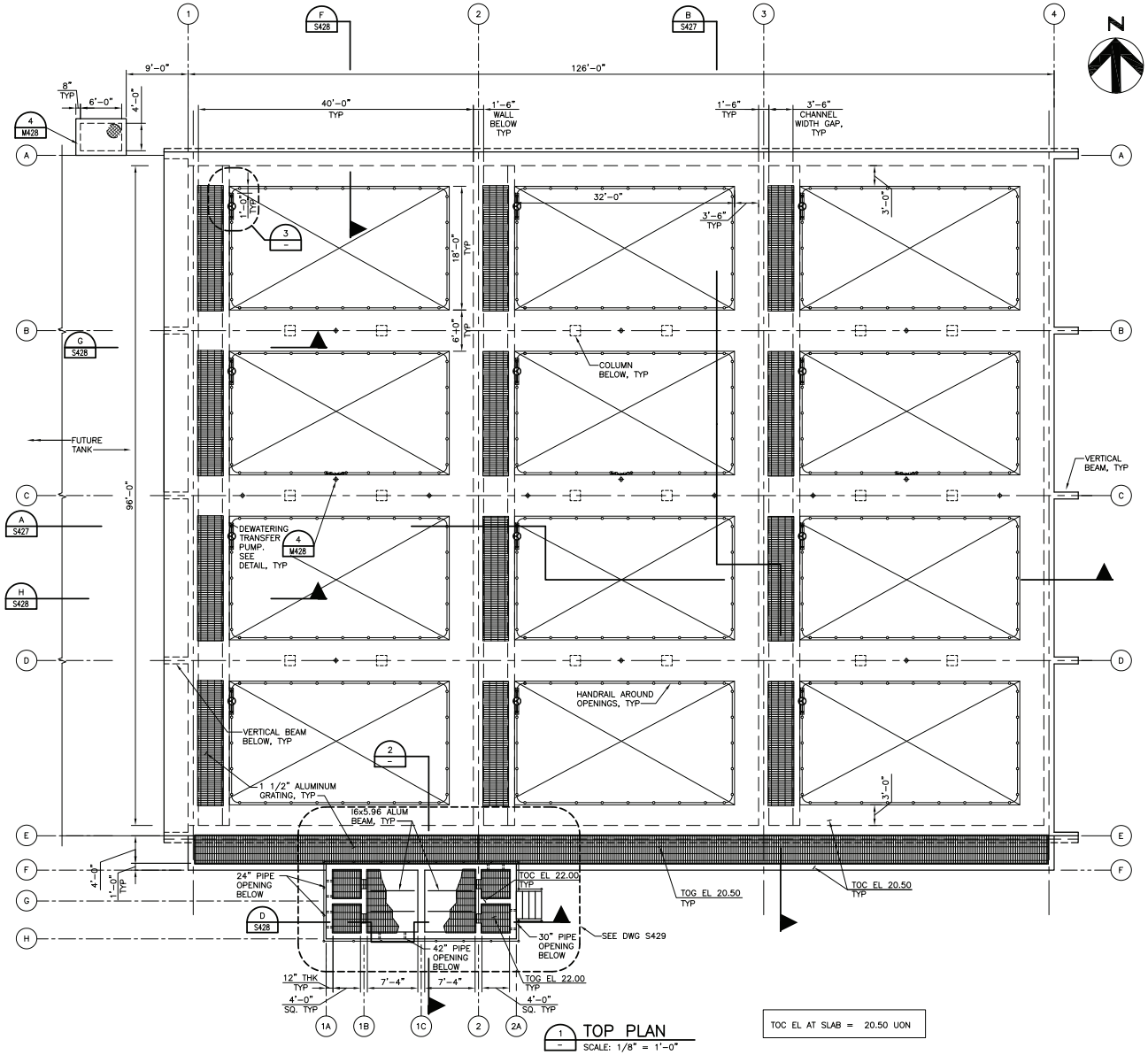

1 TOP PLAN
SCALE: 1/8" = 1'-0"

TOC EL AT SLAB = 20.50 UON

HDR Engineering, Inc. 3230 El Camino Real Suite 200 Irvine, Ca. 92602-1377	DESIGNED SC DRAWN NK CHECKED –	SUBMITTED ____ DATE ____ APPROVED ____ DATE ____	FILE – DATE –	GOLETA SANITARY DISTRICT APPROVED ____ DATE ____ GENERAL MANAGER / DISTRICT ENGINEER RCE No. 18109	VERIFY SCALE BAR IS ONE INCH ON ORIGINAL DRAWING. IF NOT ONE INCH ON THIS SHEET, ADJUST SCALE ACCORDINGLY.	WASTEWATER TREATMENT PLANT UPGRADING	ACTIVATED SLUDGE BASIN TOP PLAN	DRAWING NUMBER S425 SHEET 133 OF 343

C:\PwWorking\SAC\dms95442\ 420S-0005.dwg 11/17/10_18:09

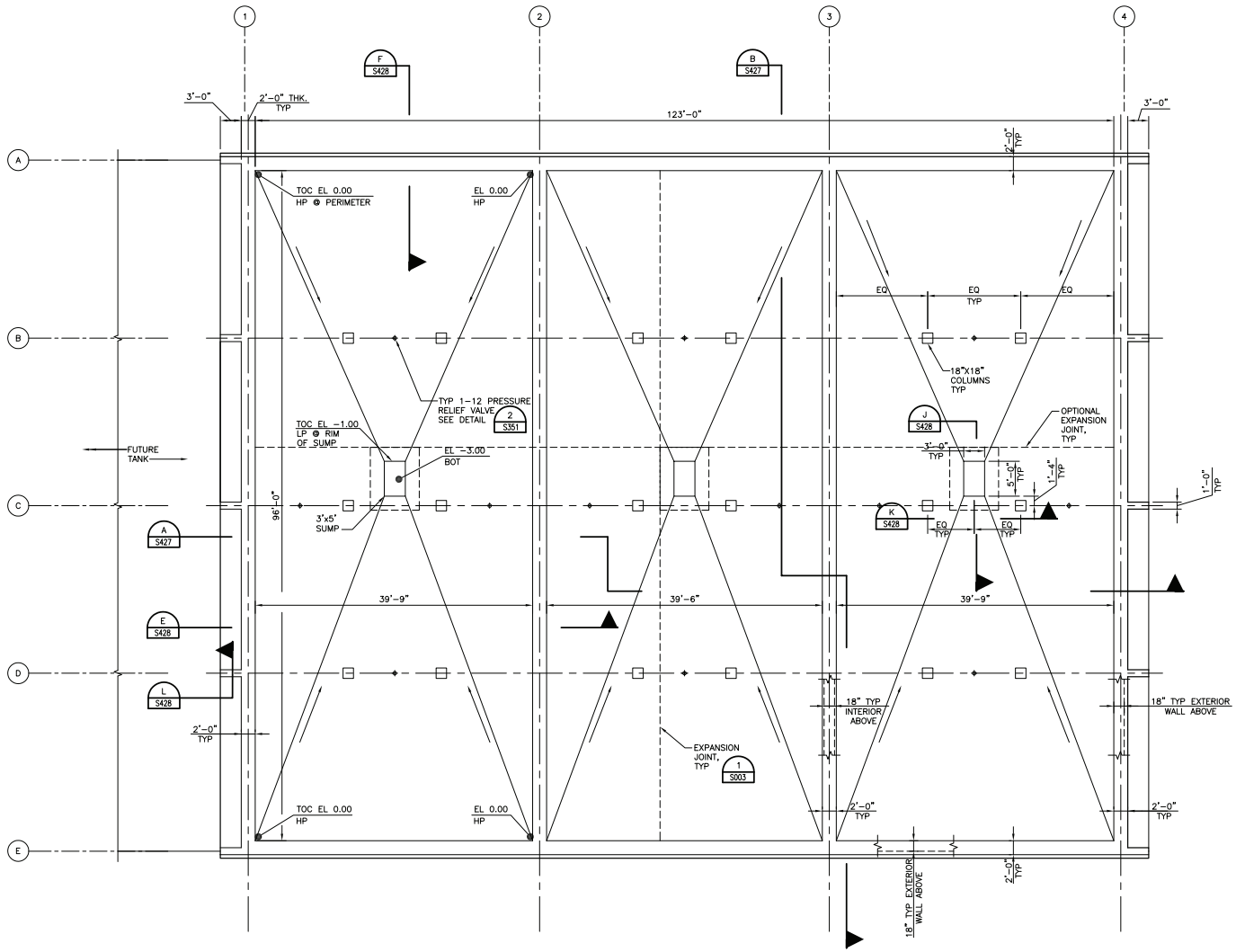

1 BOTTOM PLAN
SCALE: 1/8" = 1'-0"

HDR Engineering, Inc. 3230 El Camino Real Suite 200 Irvine, Ca. 92602-1377	DESIGNED SC DRAWN SL CHECKED –	SUBMITTED ____ DATE ____ APPROVED ____ DATE ____	FILE – DATE –	GOLETA SANITARY DISTRICT APPROVED ____ DATE ____ GENERAL MANAGER / DISTRICT ENGINEER RCE No. 18109	VERIFY SCALE BAR IS ONE INCH ON ORIGINAL DRAWING. IF NOT ONE INCH ON THIS SHEET, ADJUST SCALE ACCORDINGLY.	WASTEWATER TREATMENT PLANT UPGRADING	ACTIVATED SLUDGE BASIN BOTTOM PLAN	DRAWING NUMBER S426 SHEET 134 OF 343

C:\PwWorking\SAC\dms95442\ 420S-0006.dwg 11/17/10_18:09

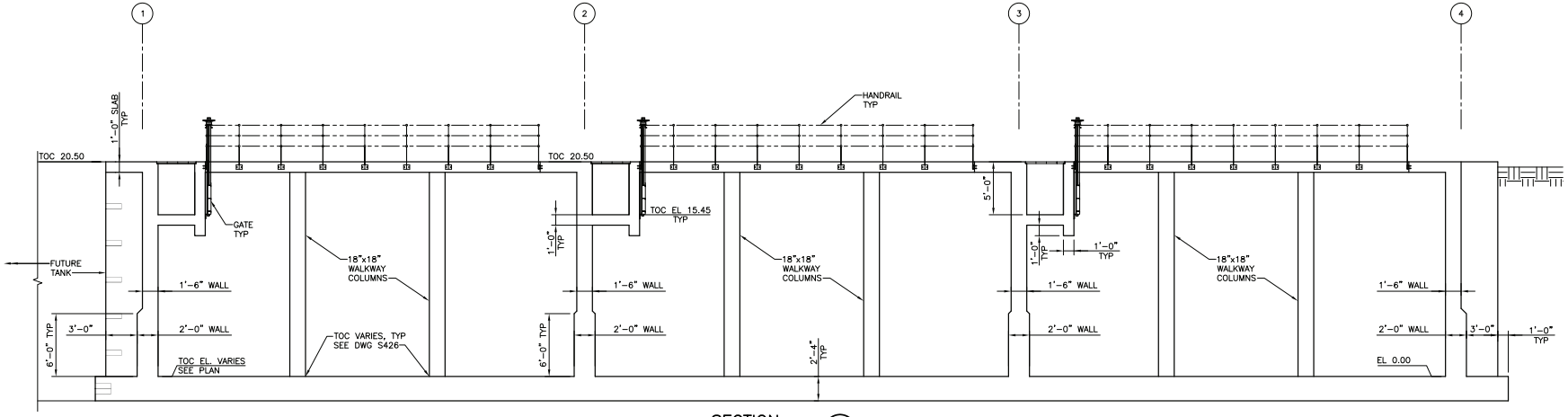

SECTION A S425
SCALE: 3/16" = 1'-0"

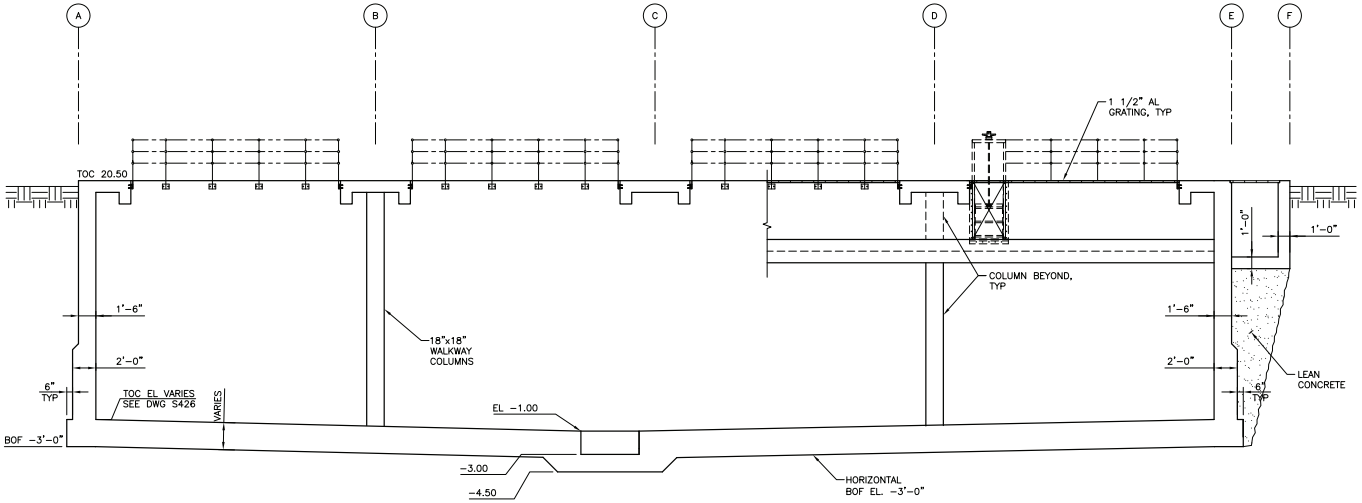

SECTION B S425
SCALE: 3/16" = 1'-0"

HDR Engineering, Inc. 3230 El Camino Real Suite 200 Irvine, Ca. 92602-1377	DESIGNED SC DRAWN SL CHECKED –	SUBMITTED ____ DATE ____ APPROVED ____ DATE ____	FILE – DATE –	GOLETA SANITARY DISTRICT APPROVED ____ DATE ____ GENERAL MANAGER / DISTRICT ENGINEER RCE No. 18109	VERIFY SCALE BAR IS ONE INCH ON ORIGINAL DRAWING. IF NOT ONE INCH ON THIS SHEET, ADJUST SCALE ACCORDINGLY.	WASTEWATER TREATMENT PLANT UPGRADING	ACTIVATED SLUDGE BASIN SECTIONS	DRAWING NUMBER S427 SHEET 135 OF 343

C:\PwWorking\SAC\dms95442\ 420S-0007.dwg 11/17/10_18:09

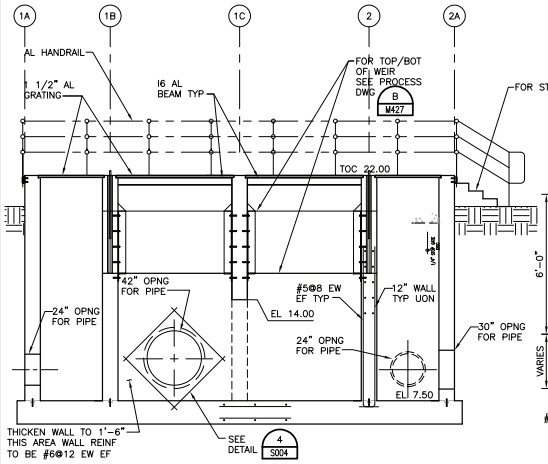

SECTION D S425
SCALE: 1/4" = 1'-0"

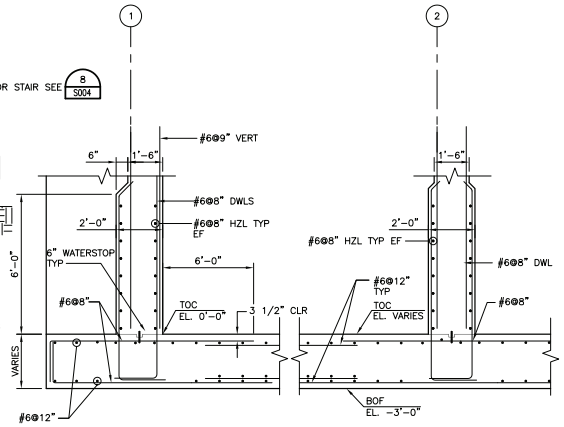

SECTION E S426
3/8" = 1'-0"

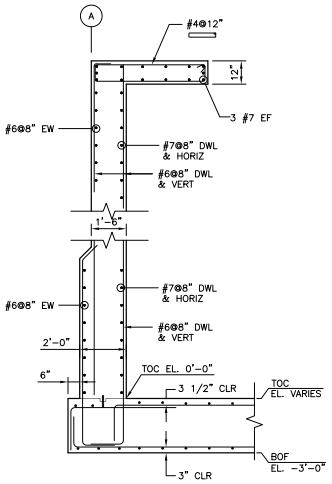

SECTION F S425 F S426
3/8" = 1'-0"

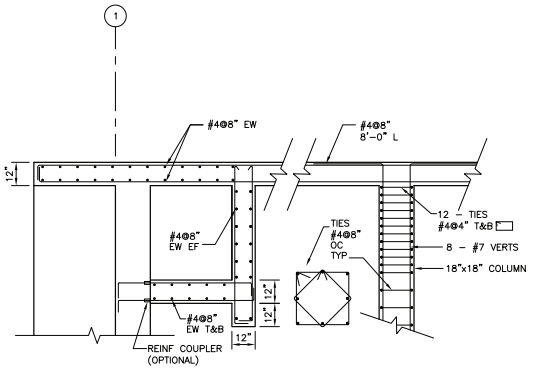

SECTION G S425
3/8" = 1'-0"

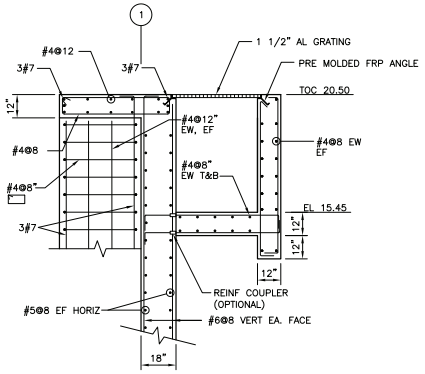

SECTION H S425
3/8" = 1'-0"

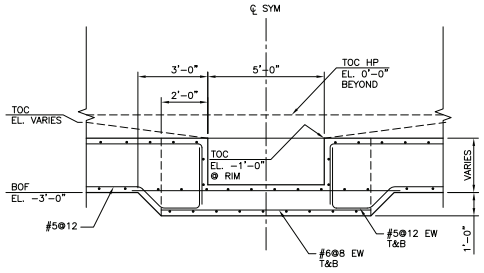

SECTION J S426
3/8" = 1'-0"

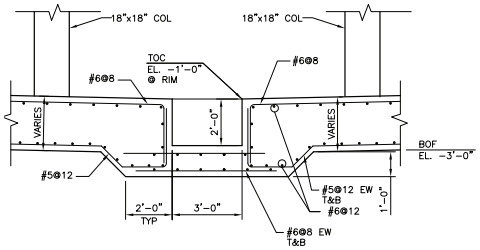

SECTION K S426
3/8" = 1'-0"

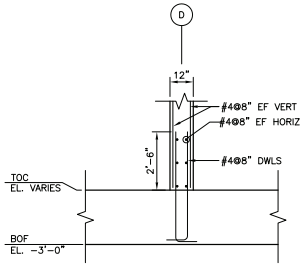

SECTION L S426
3/8" = 1'-0"

HDR Engineering, Inc.
3230 El Camino Real
Suite 200
Irvine, Ca. 92602-1377

DESIGNED SC
DRAWN SL
CHECKED –

SUBMITTED _____ DATE _____
APPROVED _____ DATE _____

FILE –
DATE –

GOLETA SANITARY DISTRICT
APPROVED _____ DATE _____
GENERAL MANAGER / DISTRICT ENGINEER RCE No. 18109

VERIFY SCALE
BAR IS ONE INCH ON ORIGINAL DRAWING.
IF NOT ONE INCH ON THIS SHEET, ADJUST SCALE ACCORDINGLY.

WASTEWATER TREATMENT PLANT UPGRADING

ACTIVATED SLUDGE BASIN
SECTIONS

DRAWING NUMBER S428
SHEET 136 OF 343

C:\PwWorking\SAC\dms95442\ 420S-0008.dwg 11/17/10 18:09

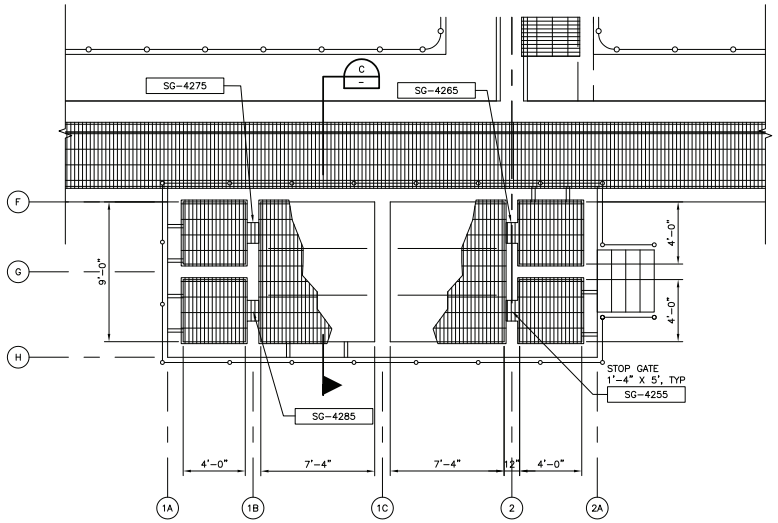

PARTIAL PLAN
SCALE: 1/4" = 1'-0"

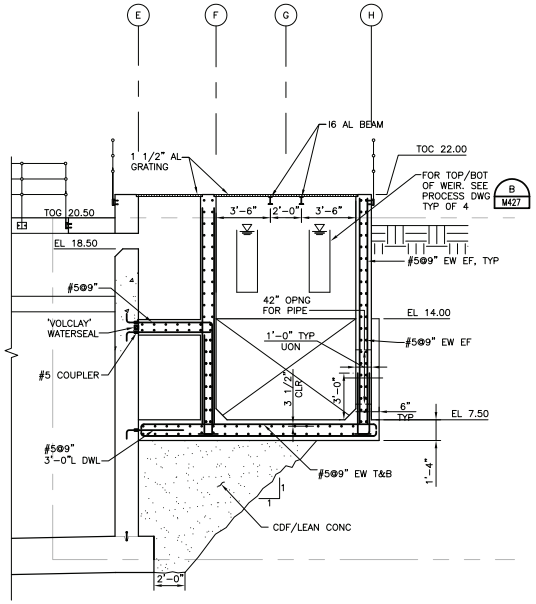

SECTION
SCALE: 1/4" = 1'-0"

C
–

HDR Engineering, Inc. 3230 El Camino Real Suite 200 Irvine, Ca. 92602-1377	DESIGNED JW DRAWN NK CHECKED –	SUBMITTED ____ DATE ____ APPROVED ____ DATE ____	FILE – DATE –	GOLETA SANITARY DISTRICT APPROVED ____ DATE ____ GENERAL MANAGER / DISTRICT ENGINEER RCE No. 18109	VERIFY SCALE BAR IS ONE INCH ON ORIGINAL DRAWING. IF NOT ONE INCH ON THIS SHEET, ADJUST SCALE ACCORDINGLY.	WASTEWATER TREATMENT PLANT UPGRADING	ACTIVATED SLUDGE BASIN SECTIONS	DRAWING NUMBER S429 SHEET 137 OF 343

C:\PwWorking\SAC\dms95442\ 420S-0009.dwg 11/17/10_18:09

NOTE:

1. FOR TYPICAL CMU AND BLOCK WALL DETAILS SEE DWG S006.
2. ⬡ INDICATES CMU WALL PANEL MARKS AS INDICATED ON 3/S006

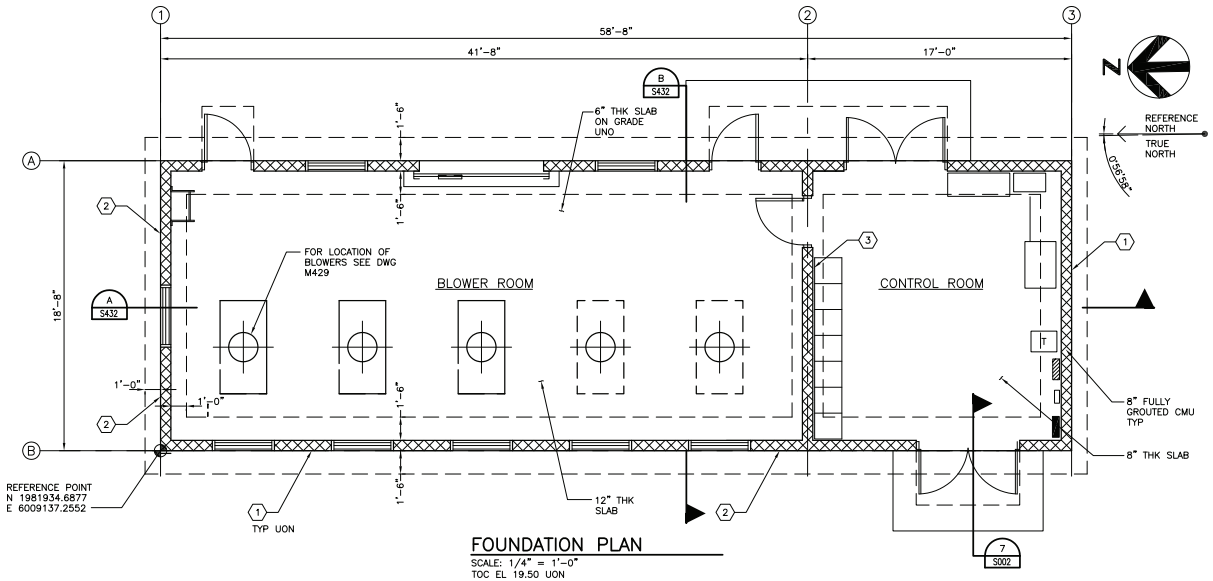

FOUNDATION PLAN

SCALE: 1/4" = 1'-0"
TOC EL 19.50 UON

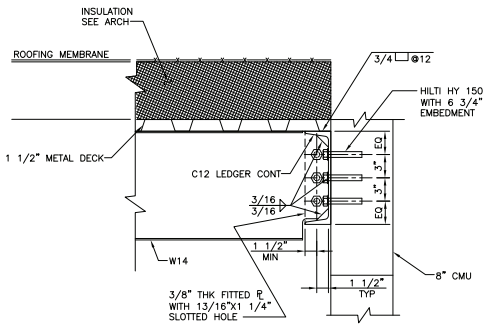

BEAM CONN @ LEDGER

SCALE: 1 1/2" = 1'-0"

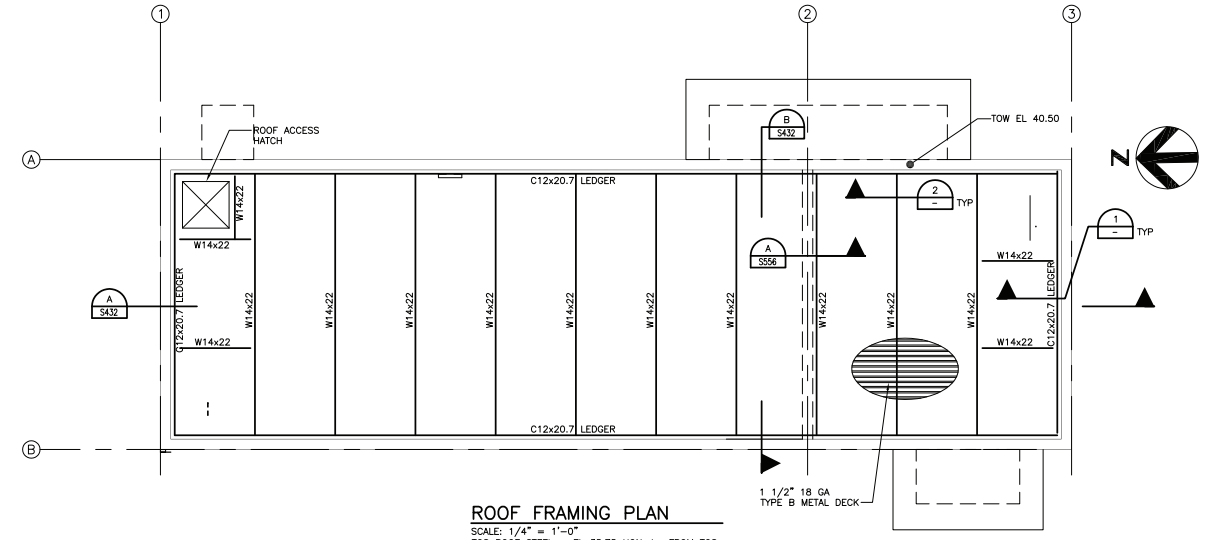

ROOF FRAMING PLAN

SCALE: 1/4" = 1'-0"
TOS ROOF STEEL = EL 35.75 UON ± FROM TOS

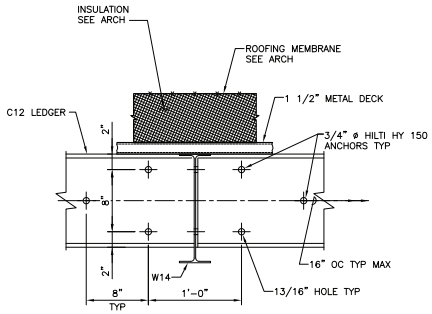

SECTION @ LEDGER

SCALE: 1 1/2" = 1'-0"

HDR Engineering, Inc. 3230 El Camino Real Suite 200 Irvine, Ca. 92602-1377	DESIGNED SC DRAWN SL CHECKED –	SUBMITTED ____ DATE ____ APPROVED ____ DATE ____	FILE – DATE –	GOLETA SANITARY DISTRICT APPROVED ____ DATE ____ GENERAL MANAGER / DISTRICT ENGINEER RCE No. 18109	VERIFY SCALE BAR IS ONE INCH ON ORIGINAL DRAWING. IF NOT ONE INCH ON THIS SHEET, ADJUST SCALE ACCORDINGLY.	WASTEWATER TREATMENT PLANT UPGRADING	BLOWER BUILDING FOUNDATION & ROOF FRAMING PLAN	DRAWING NUMBER S431 SHEET 138 OF 343

C:\PwWorking\SAC\dms95442\ 430S-0001.dwg 11/17/10 18:09

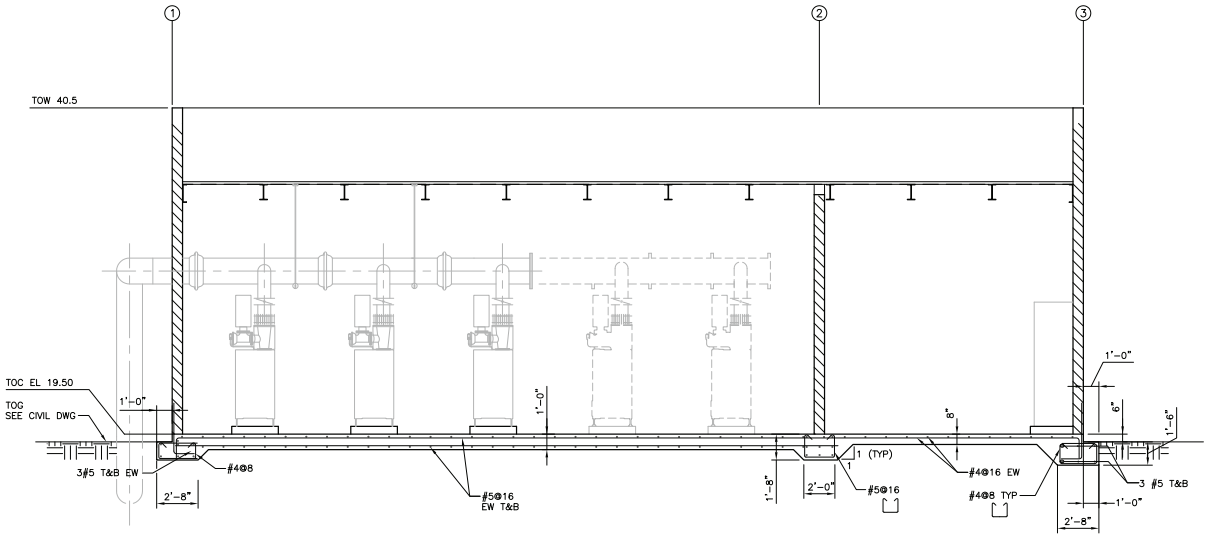

SECTION
SCALE: 1/4" = 1'-0"
A S431

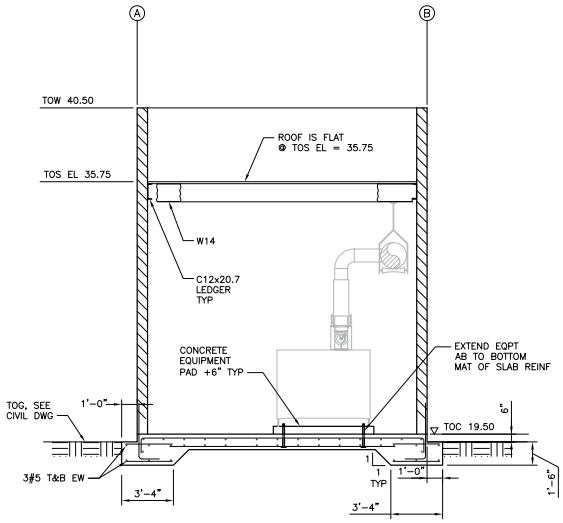

SECTION
SCALE: 1/4" = 1'-0"
B S431

NOTE:

SEE DWG S006 & S007 FOR
TYP BLOCK WALL DETAILS

HDR Engineering, Inc.
3230 El Camino Real
Suite 200
Irvine, Ca. 92602-1377

DESIGNED SC
DRAWN SL
CHECKED –

SUBMITTED _____ DATE _____
APPROVED _____ DATE _____

FILE –
DATE –

GOLETA SANITARY DISTRICT
APPROVED _____ DATE _____
GENERAL MANAGER / DISTRICT ENGINEER RCE No. 18109

VERIFY SCALE
BAR IS ONE INCH ON ORIGINAL DRAWING.
0 1
IF NOT ONE INCH ON THIS SHEET, ADJUST SCALE ACCORDINGLY.

WASTEWATER
TREATMENT PLANT
UPGRADING

BLOWER BUILDING
SECTIONS & DETAILS

DRAWING NUMBER S432
SHEET 139 OF 343

C:\PwWorking\SAC\dms95442_430S-0002.dwg 11/17/10_18:09

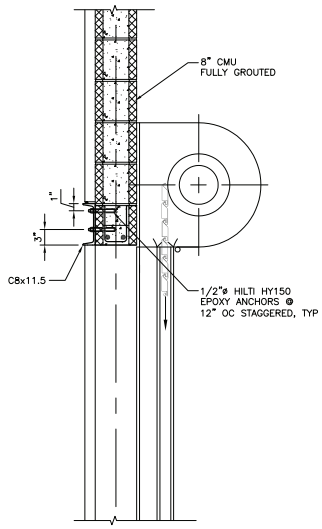

SECTION @ FEATURE STRIP (A / –)
SCALE: 1" = 1'-0"

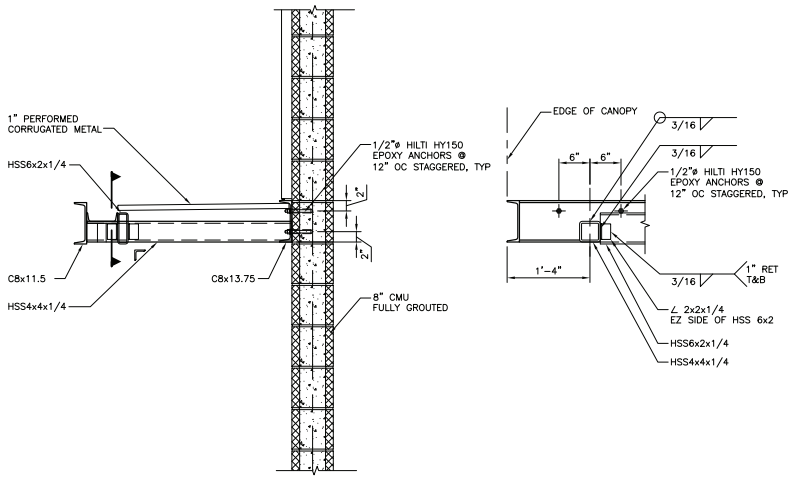

SECTION @ SUNSHADE (B / –)
SCALE: 1" = 1'-0"

HDR Engineering, Inc. 3230 El Camino Real Suite 200 Irvine, Ca. 92602-1377	DESIGNED SC DRAWN SL CHECKED –	SUBMITTED ____ DATE ____ APPROVED ____ DATE ____	FILE – DATE –	GOLETA SANITARY DISTRICT APPROVED ____ DATE ____ GENERAL MANAGER / DISTRICT ENGINEER RCE No. 18109	VERIFY SCALE BAR IS ONE INCH ON ORIGINAL DRAWING. IF NOT ONE INCH ON THIS SHEET, ADJUST SCALE ACCORDINGLY.	WASTEWATER TREATMENT PLANT UPGRADING	BLOWER BUILDING SECTIONS & DETAILS	DRAWING NUMBER S433 SHEET 140 OF 343

C:\PwWorking\SAC\dms95442_430S-0003.dwg 11/17/10_18:09

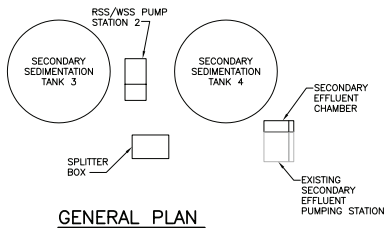

GENERAL PLAN
SCALE: 1" = 600'-0"

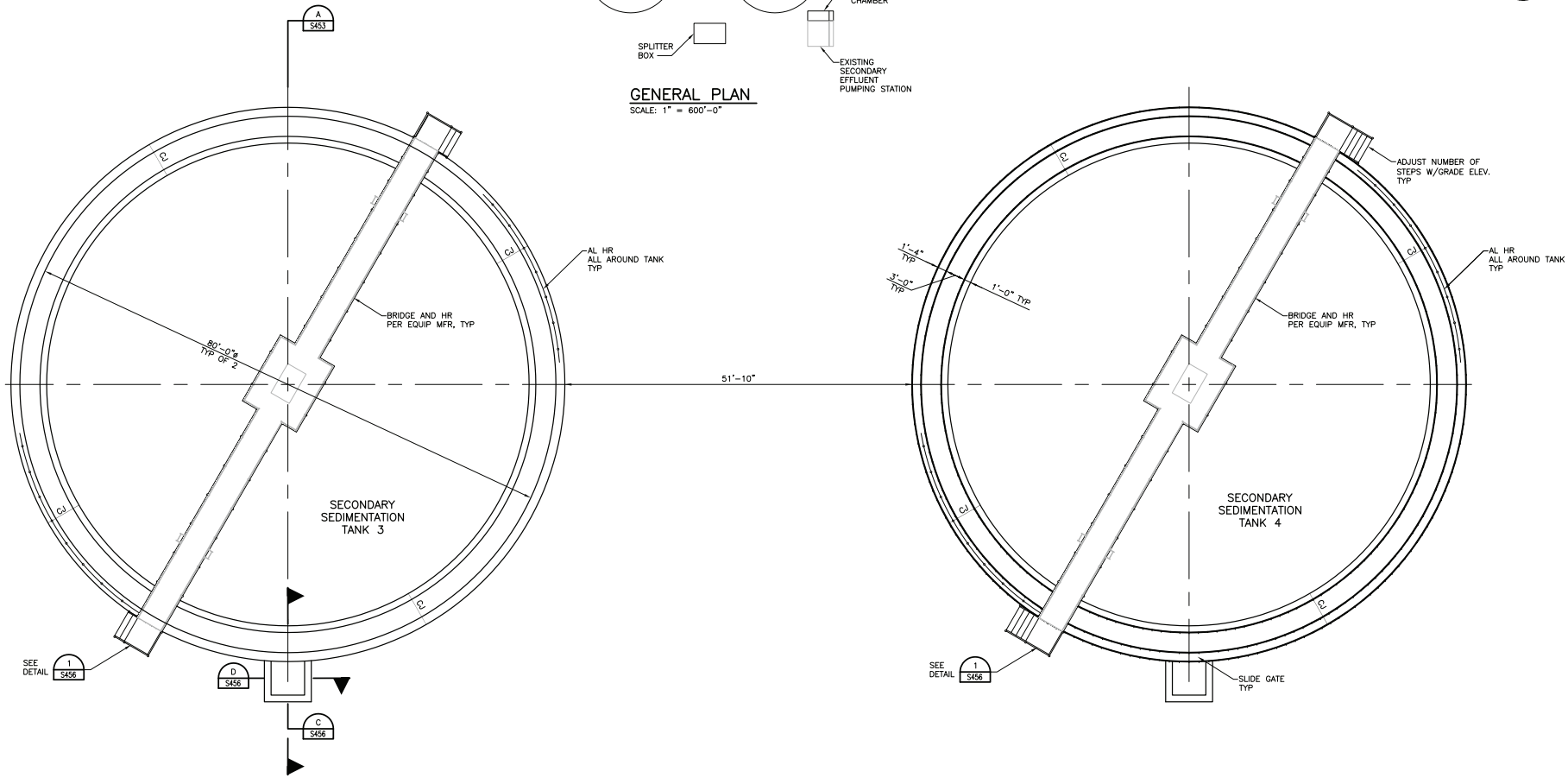

TOP PLAN
SCALE: 1/8" = 1'-0"

HDR Engineering, Inc. 3230 El Camino Real Suite 200 Irvine, Ca. 92602-1377	DESIGNED SC DRAWN SL CHECKED –	SUBMITTED ____ DATE ____ APPROVED ____ DATE ____	FILE – DATE –	GOLETA SANITARY DISTRICT APPROVED ____ DATE ____ GENERAL MANAGER / DISTRICT ENGINEER RCE No. 18109	VERIFY SCALE BAR IS ONE INCH ON ORIGINAL DRAWING. IF NOT ONE INCH ON THIS SHEET, ADJUST SCALE ACCORDINGLY.	WASTEWATER TREATMENT PLANT UPGRADING	SECONDARY SEDIMENTATION TANKS TOP PLAN	DRAWING NUMBER S451 SHEET 141 OF 343

C:\PwWorking\SAC\dms95442\ 450S-0001.dwg 11/17/10_18:09

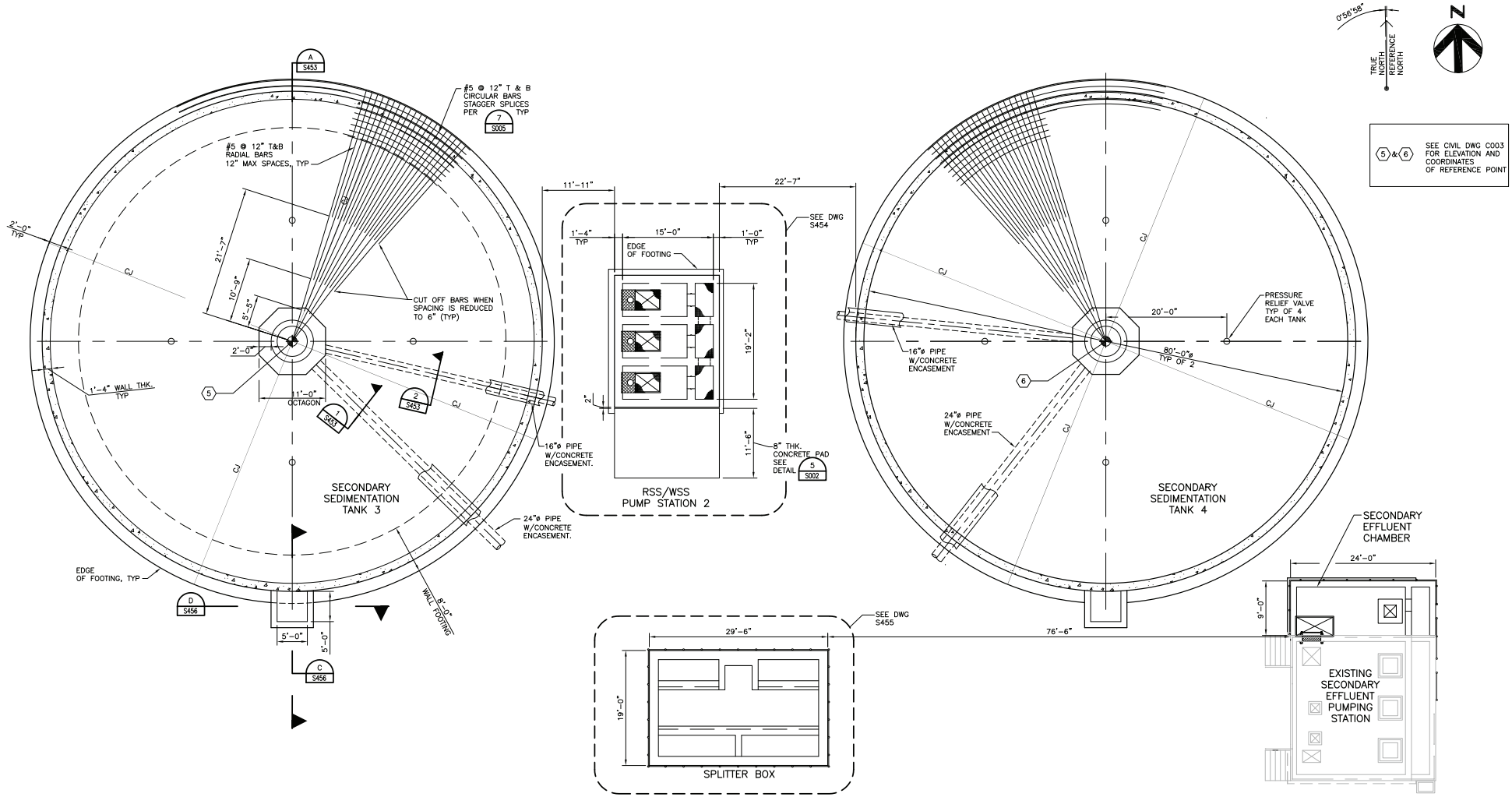

BOTTOM PLAN

SCALE: 1/8" = 1'-0"

HDR Engineering, Inc. 3230 El Camino Real Suite 200 Irvine, Ca. 92602-1377	DESIGNED CS DRAWN SL CHECKED –	SUBMITTED ____ DATE ____ APPROVED ____ DATE ____	FILE – DATE –	GOLETA SANITARY DISTRICT APPROVED ____ DATE ____ GENERAL MANAGER / DISTRICT ENGINEER RCE No. 18109	VERIFY SCALE BAR IS ONE INCH ON ORIGINAL DRAWING. IF NOT ONE INCH ON THIS SHEET, ADJUST SCALE ACCORDINGLY.	WASTEWATER TREATMENT PLANT UPGRADING	SECONDARY SEDIMENTATION TANKS BOTTOM PLAN	DRAWING NUMBER S452 SHEET 142 OF 343

C:\PwWorking\SAC\dms95442_450S-0002.dwg 11/17/10_18:09

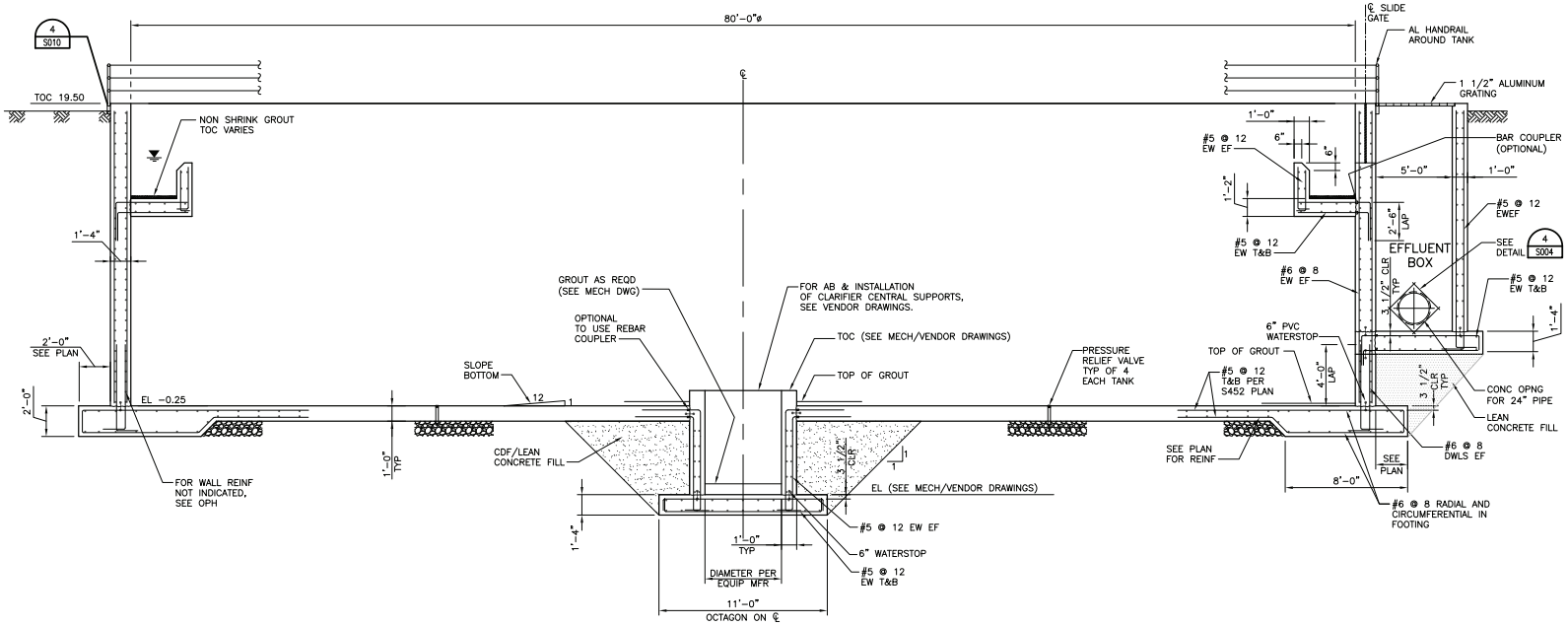

SECTION A S451
SCALE: 1/4" = 1'-0"

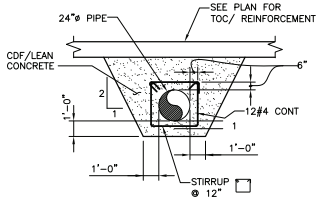

DETAIL 1 S452
SCALE: 1/4" = 1'-0"

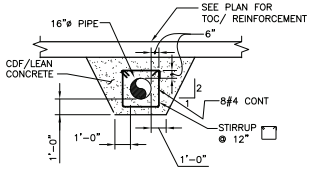

DETAIL 2 S452
SCALE: 1/4" = 1'-0"

HDR Engineering, Inc. 3230 El Camino Real Suite 200 Irvine, Ca. 92602-1377	DESIGNED SC DRAWN SL CHECKED –	SUBMITTED ____ DATE ____ APPROVED ____ DATE ____	FILE – DATE –	GOLETA SANITARY DISTRICT APPROVED ____ DATE ____ GENERAL MANAGER / DISTRICT ENGINEER RCE No. 18109	VERIFY SCALE BAR IS ONE INCH ON ORIGINAL DRAWING. IF NOT ONE INCH ON THIS SHEET, ADJUST SCALE ACCORDINGLY.	WASTEWATER TREATMENT PLANT UPGRADING	SECONDARY SEDIMENTATION TANKS SECTION	DRAWING NUMBER S453 SHEET 143 OF 343

C:\PwWorking\SAC\dms95442\ 450S-0003.dwg 11/17/10_18:09

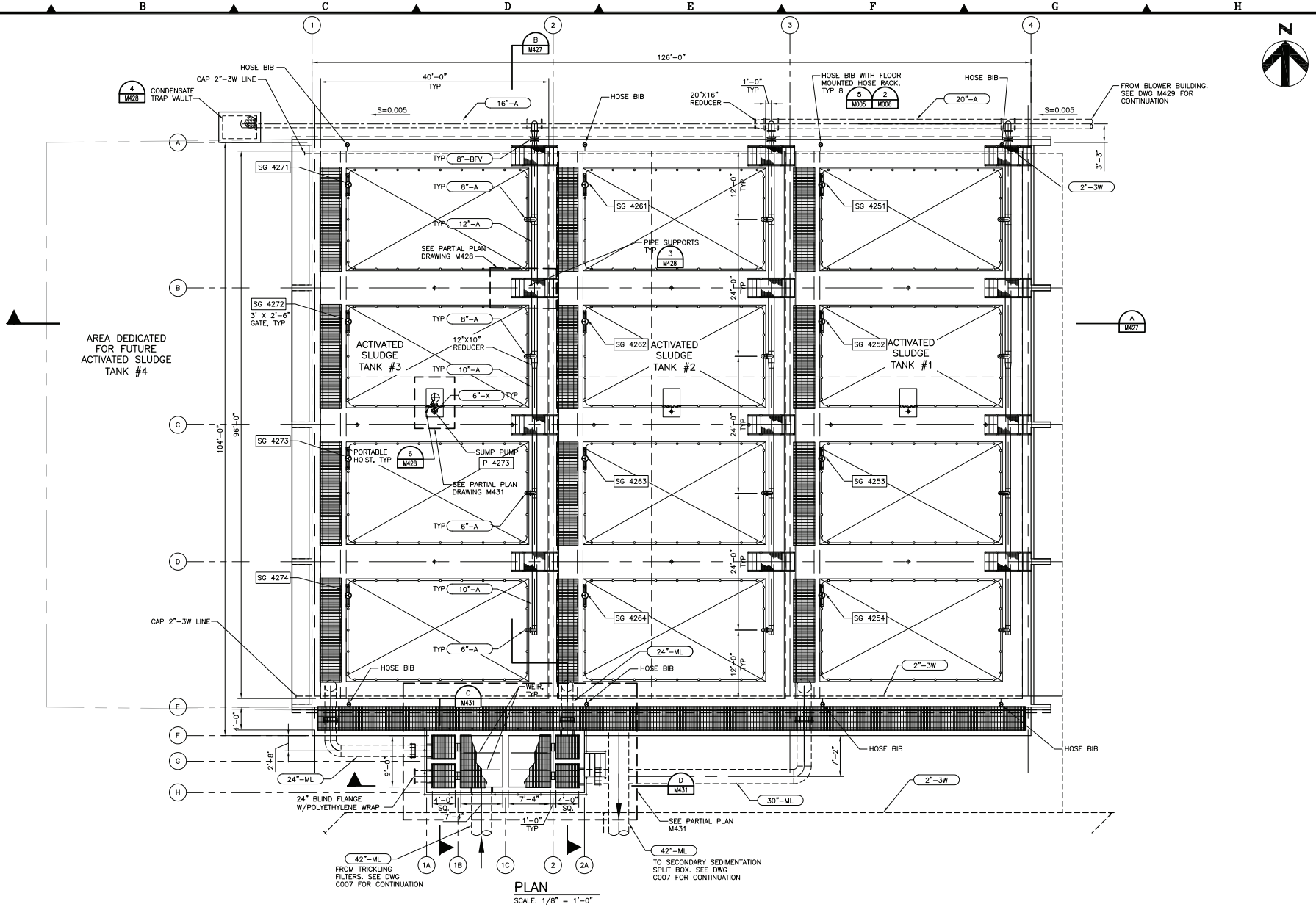

PLAN

SCALE: 1/8" = 1'-0"

HDR Engineering, Inc. 3230 El Camino Real Suite 200 Irvine, Ca. 92602-1377	DESIGNED AD DRAWN NK CHECKED GG	SUBMITTED ____ DATE ____ APPROVED ____ DATE ____	FILE – DATE –	GOLETA SANITARY DISTRICT APPROVED ____ DATE ____ GENERAL MANAGER / DISTRICT ENGINEER RCE No. 18109	VERIFY SCALE BAR IS ONE INCH ON ORIGINAL DRAWING. IF NOT ONE INCH ON THIS SHEET, ADJUST SCALE ACCORDINGLY.	WASTEWATER TREATMENT PLANT UPGRADING	ACTIVATED SLUDGE BASIN TOP PLAN	DRAWING NUMBER M425 SHEET 170 OF 343

C:\PwWorking\SAC\dms946611\ 420M-005.dwg 11/17/10 18:10

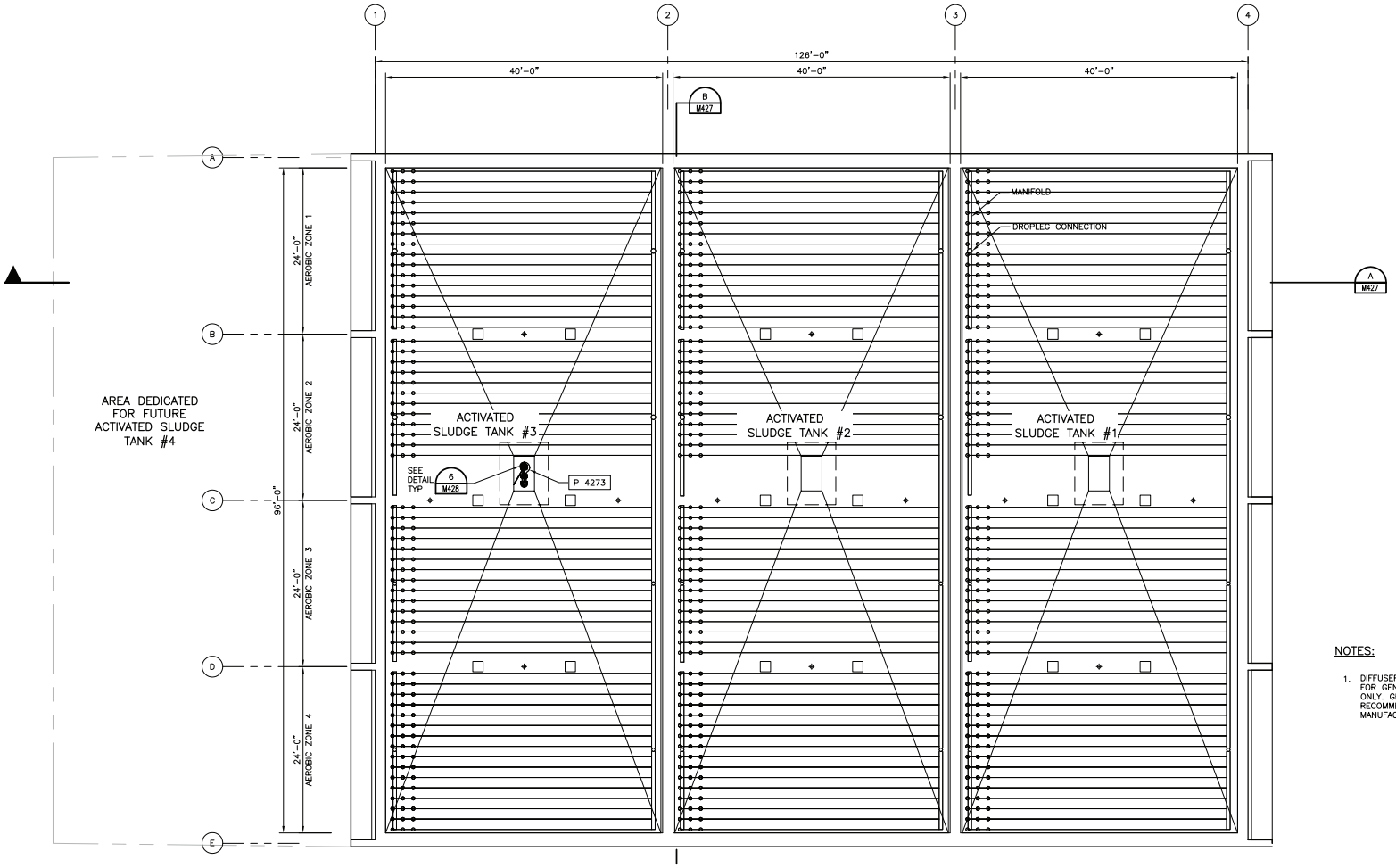

NOTES:

1. DIFFUSER GRID LAYOUT IS SHOWN FOR GENERAL ARRANGEMENT ONLY. GRID LAYOUT TO BE RECOMMENDED BY DIFFUSER MANUFACTURER.

BOTTOM PLAN
SCALE: 1/8" = 1'-0"

HDR Engineering, Inc. 3230 El Camino Real Suite 200 Irvine, Ca. 92602-1377	DESIGNED AD DRAWN NK CHECKED GG	SUBMITTED ____ DATE ____ APPROVED ____ DATE ____	FILE – DATE –	GOLETA SANITARY DISTRICT APPROVED ____ DATE ____ GENERAL MANAGER / DISTRICT ENGINEER RCE No. 18109	VERIFY SCALE BAR IS ONE INCH ON ORIGINAL DRAWING. IF NOT ONE INCH ON THIS SHEET, ADJUST SCALE ACCORDINGLY.	WASTEWATER TREATMENT PLANT UPGRADING	ACTIVATED SLUDGE BASIN BOTTOM PLAN	DRAWING NUMBER M426 SHEET 171 OF 343

C:\PwWorking\SAC\dms94661\ 420M-006.dwg 11/17/10_18:10

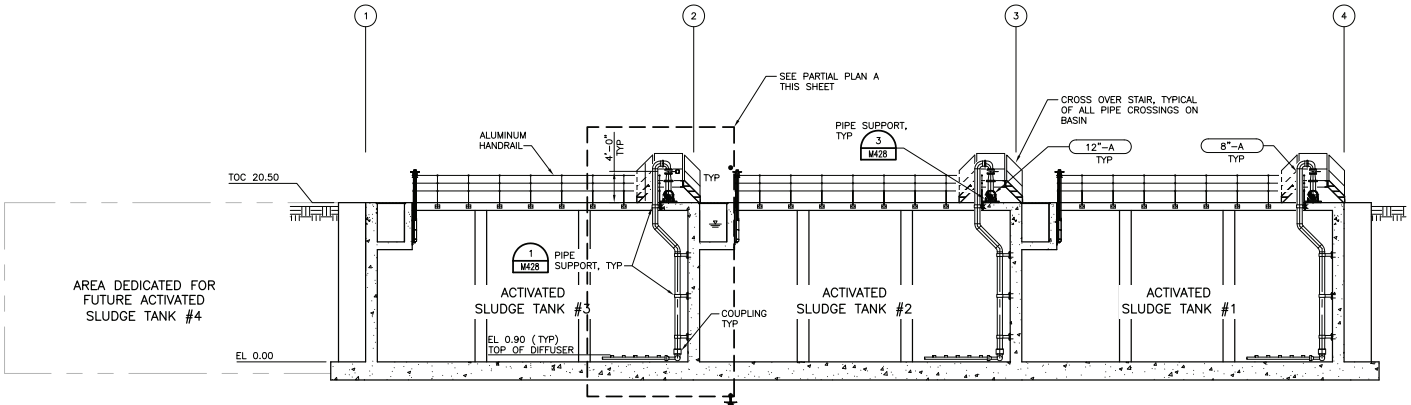

SECTION A M425 M426
SCALE: 1/8" = 1'-0"

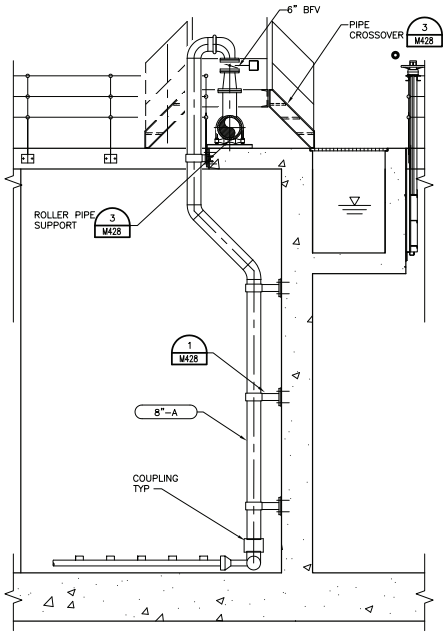

PARTIAL PLAN A –
SCALE: 1/4" = 1'-0"

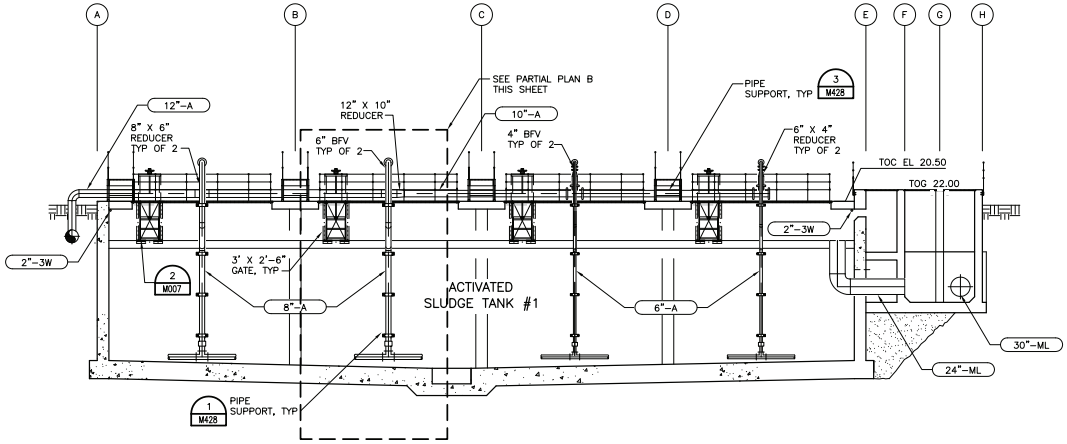

SECTION B M425
SCALE: 1/8" = 1'-0"

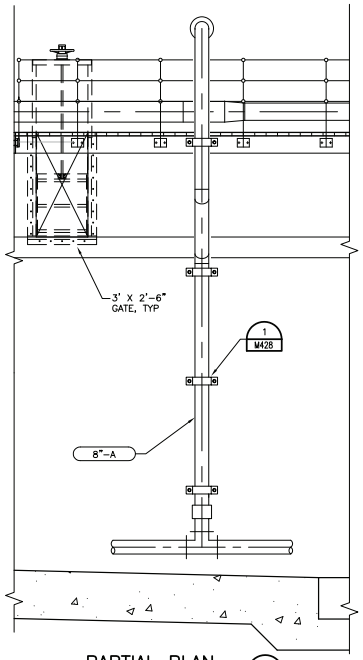

PARTIAL PLAN B –
SCALE: 1/4" = 1'-0"

HDR Engineering, Inc. 3230 El Camino Real Suite 200 Irvine, Ca. 92602-1377	DESIGNED AD DRAWN NK CHECKED GG	SUBMITTED ____ DATE ____ APPROVED ____ DATE ____	FILE – DATE –	GOLETA SANITARY DISTRICT APPROVED ____ DATE ____ GENERAL MANAGER / DISTRICT ENGINEER RCE No. 18109	VERIFY SCALE BAR IS ONE INCH ON ORIGINAL DRAWING. IF NOT ONE INCH ON THIS SHEET, ADJUST SCALE ACCORDINGLY.	WASTEWATER TREATMENT PLANT UPGRADING	ACTIVATED SLUDGE BASIN SECTIONS	DRAWING NUMBER M427 SHEET 172 OF 343

C:\PwWorking\SAC\dms946611\ 420M-007.dwg 11/17/10 18:10

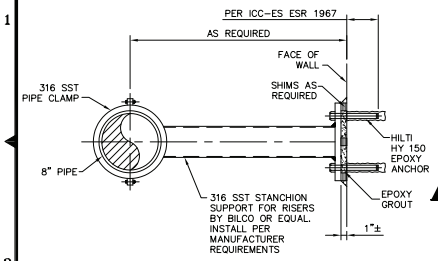

AERATION PIPE STANCHION (1)
NTS

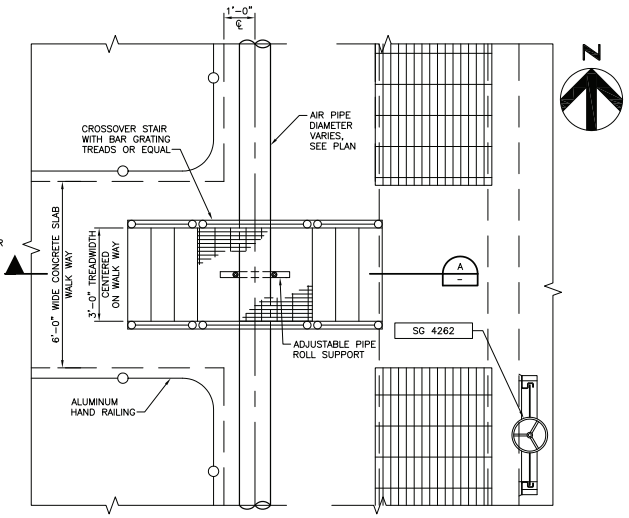

PLAN

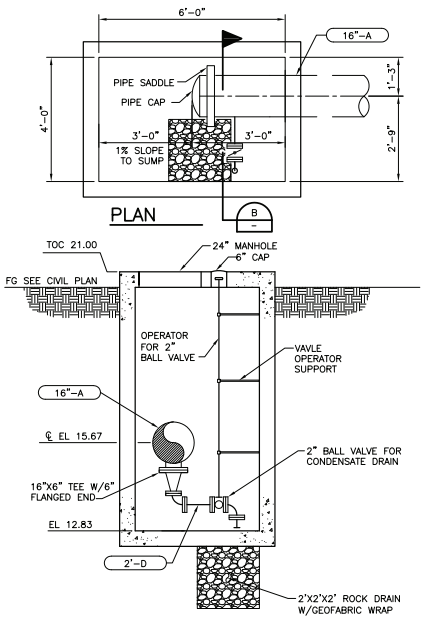

PLAN

SECTION (B)

CONDENSATE TRAP VAULT (4)
1/2" = 1'-0"

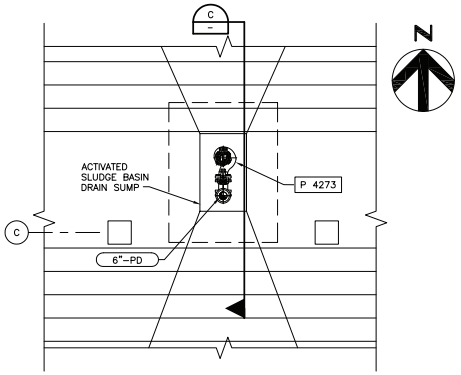

PLAN

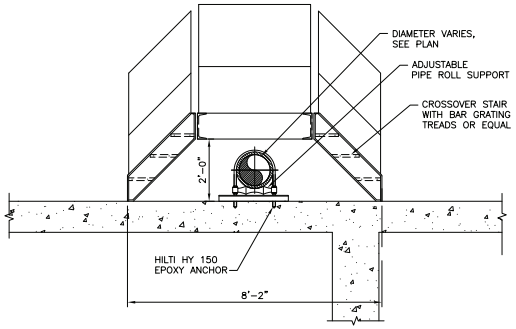

SECTION (A)

PIPE CROSSOVER (3)
1/2" = 1'-0"

NOTE:

1. PORTABLE HOIST SHALL BE HALLIDAY PRODUCTS MODEL D2B36D OR APPROVED EQUAL.
2. HOIST SOCKET SHALL BE HALLIDAY PRODUCTS MODEL D2S WITH POLYMER LINING OR APPROVED EQUAL.
3. PORTABLE HOIST AND SOCKET SHALL BE SS 304.

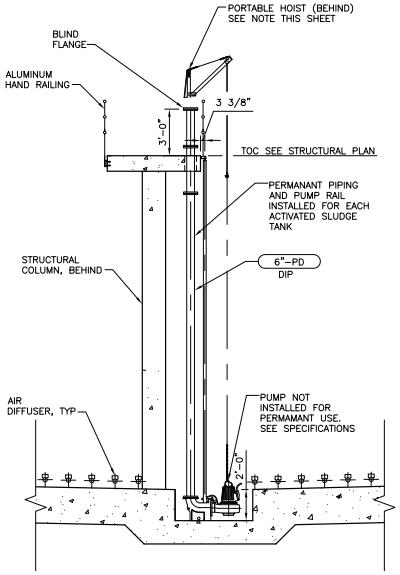

SECTION (C)

SUMP PUMP (6)
1/4" = 1'-0"

HDR Engineering, Inc. 3230 El Camino Real Suite 200 Irvine, Ca. 92602-1377	DESIGNED AD DRAWN NK CHECKED GG	SUBMITTED ____ DATE ____ APPROVED ____ DATE ____	FILE – DATE –	GOLETA SANITARY DISTRICT APPROVED ____ DATE ____ GENERAL MANAGER / DISTRICT ENGINEER RCE No. 18109	VERIFY SCALE BAR IS ONE INCH ON ORIGINAL DRAWING. IF NOT ONE INCH ON THIS SHEET, ADJUST SCALE ACCORDINGLY.	WASTEWATER TREATMENT PLANT UPGRADING	ACTIVATED SLUDGE BASIN DETAILS	DRAWING NUMBER M428 SHEET 173 OF 343

C:\PwWorking\SAC\dms94661\ 420M-008.dwg 11/17/10 18:10

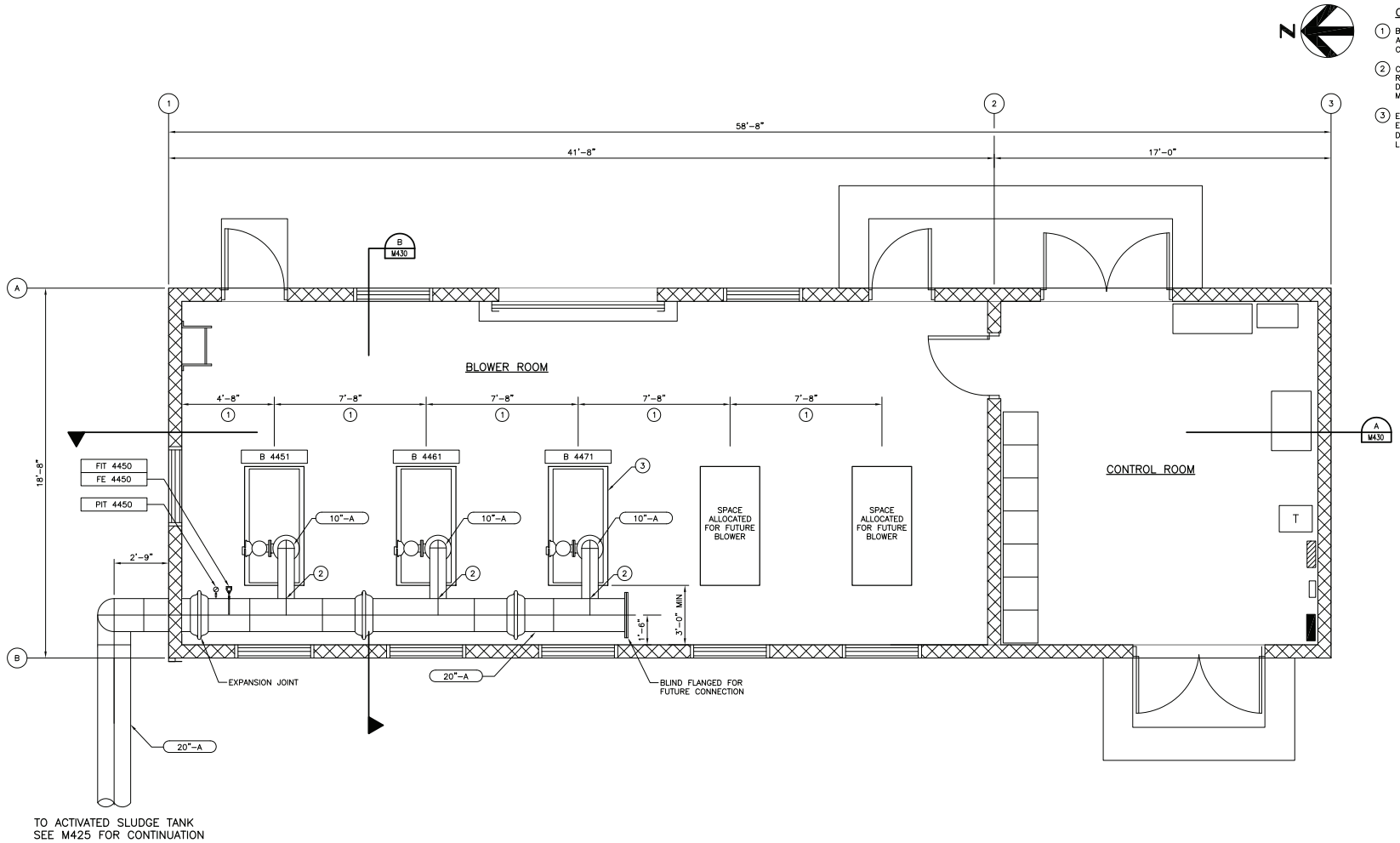

CONSTRUCTION NOTES:

1. BLOWER HOUSINGS VARY IN WIDTH BETWEEN ACCEPTABLE MANUFACTURERS. ALLOW MINIMUM 3' CLEARANCE ON ALL SIDES OF BLOWERS.
2. CONNECT BLOWER DISCHARGE AIR HEADER. PIPING AS REQUIRED BY BLOWER MANUFACTURER. BLOWER DISCHARGE LOCATION AND HEIGHT MAY VARY BY MANUFACTURER.
3. EACH BLOWER WILL BE MOUNTED ON A CONCRETE EQUIPMENT PAD. THE PAD WILL BE 6" THICK WITH DIMENSIONS AT LEAST 3" GREATER THAN THE BLOWER LENGTH AND WIDTH.

PLAN

SCALE: 3/8" = 1'-0"

HDR Engineering, Inc. 3230 El Camino Real Suite 200 Irvine, Ca. 92602-1377	DESIGNED AD DRAWN SL CHECKED GG	SUBMITTED ____ DATE ____ APPROVED ____ DATE ____	FILE – DATE –	GOLETA SANITARY DISTRICT APPROVED ____ DATE ____ GENERAL MANAGER / DISTRICT ENGINEER RCE No. 18109	VERIFY SCALE BAR IS ONE INCH ON ORIGINAL DRAWING. IF NOT ONE INCH ON THIS SHEET, ADJUST SCALE ACCORDINGLY.	WASTEWATER TREATMENT PLANT UPGRADING	BLOWER BUILDING PLAN	DRAWING NUMBER M429 SHEET 174 OF 343

C:\PwWorking\SAC\dms946611\ 420M-009.dwg 11/17/10 18:10

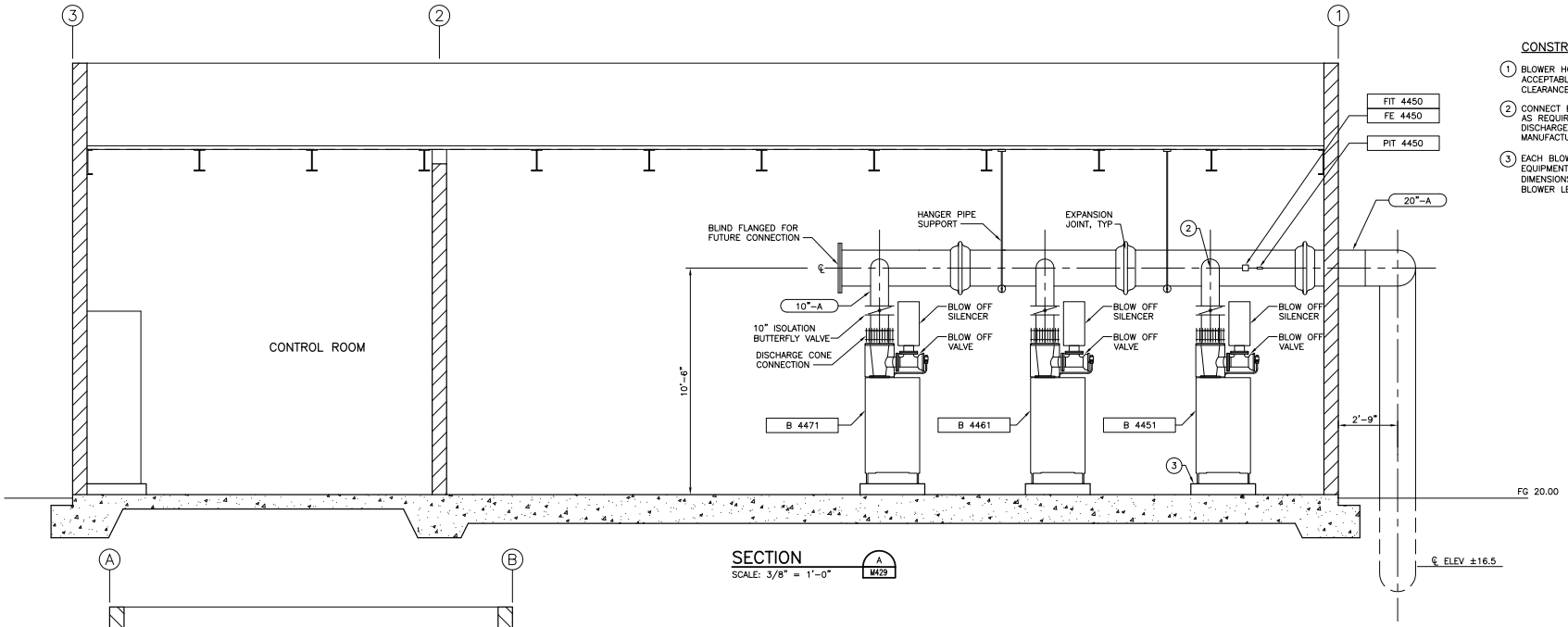

SECTION
SCALE: 3/8" = 1'–0"

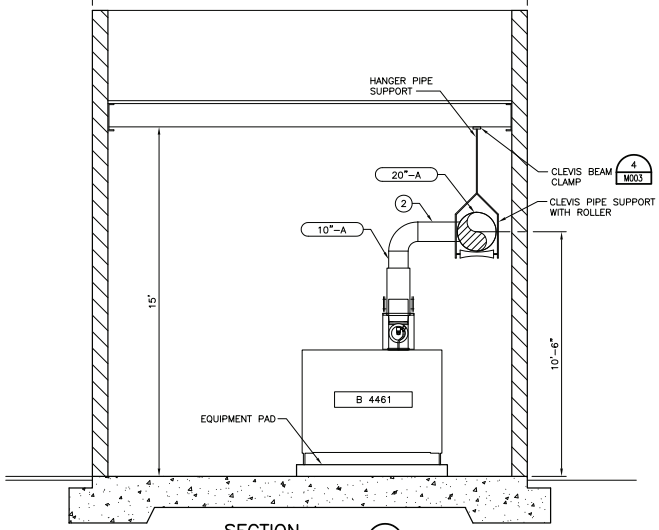

SECTION
SCALE: 3/8" = 1'–0"

CONSTRUCTION NOTES:

1. BLOWER HOUSINGS VARY IN WIDTH BETWEEN ACCEPTABLE MANUFACTURERS. ALLOW MINIMUM 3' CLEARANCE ON ALL SIDES OF BLOWERS.
2. CONNECT BLOWER DISCHARGE AIR HEADER. PIPING AS REQUIRED BY BLOWER MANUFACTURER. BLOWER DISCHARGE LOCATION AND HEIGHT MAY VARY BY MANUFACTURER.
3. EACH BLOWER WILL BE MOUNTED ON A CONCRETE EQUIPMENT PAD. THE PAD WILL BE 6" THICK WITH DIMENSIONS AT LEAST 3" GREATER THAN THE BLOWER LENGTH AND WIDTH.

HDR Engineering, Inc.
3230 El Camino Real
Suite 200
Irvine, Ca. 92602-1377

DESIGNED AD
DRAWN SL
CHECKED GG

SUBMITTED ____ DATE ____
APPROVED ____ DATE ____

FILE –
DATE –

GOLETA SANITARY DISTRICT
APPROVED ____ DATE ____
GENERAL MANAGER / DISTRICT ENGINEER RCE No. 18109

VERIFY SCALE
BAR IS ONE INCH ON ORIGINAL DRAWING.
IF NOT ONE INCH ON THIS SHEET, ADJUST SCALE ACCORDINGLY.

WASTEWATER TREATMENT PLANT UPGRADING

BLOWER BUILDING
SECTIONS

DRAWING NUMBER M430
SHEET 175 OF 343

C:\PwWorking\SAC\dms946611\ 420M-010.dwg 11/17/10_18:10

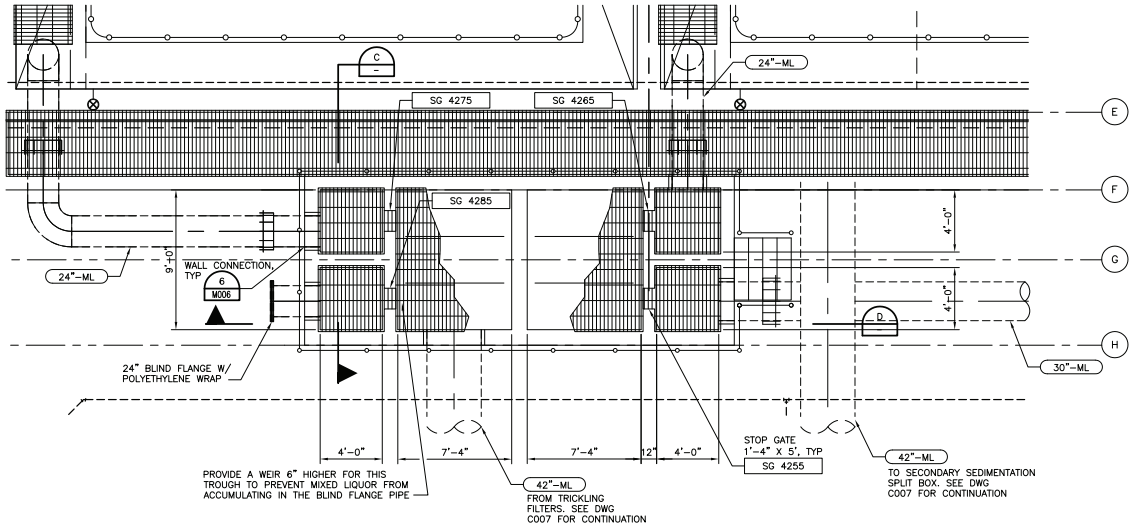

PARTIAL PLAN
SCALE: 1/4" = 1'–0"

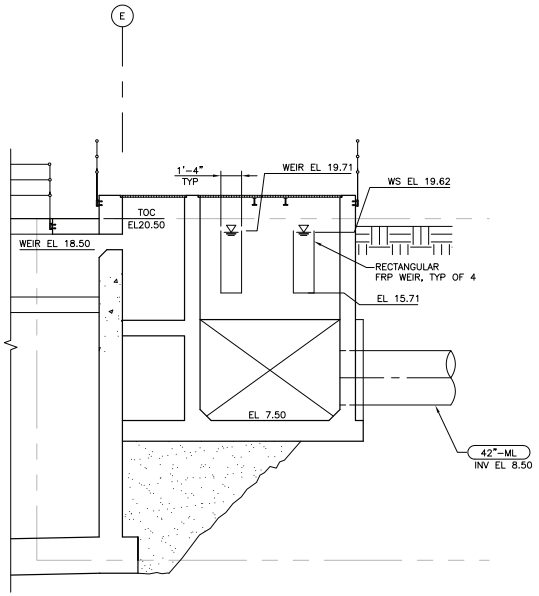

SECTION C
SCALE: 1/4" = 1'–0"

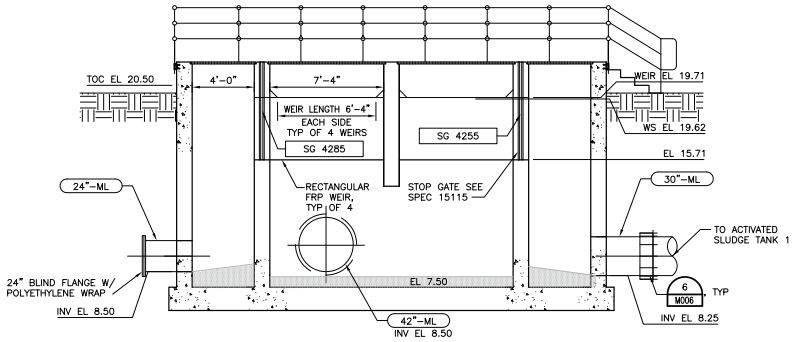

SECTION D
SCALE: 1/4" = 1'–0"

HDR Engineering, Inc. 3230 El Camino Real Suite 200 Irvine, Ca. 92602-1377	DESIGNED AD DRAWN NK CHECKED GG	SUBMITTED ____ DATE ____ APPROVED ____ DATE ____	FILE – DATE –	GOLETA SANITARY DISTRICT APPROVED ____ DATE ____ GENERAL MANAGER / DISTRICT ENGINEER RCE No. 18109	VERIFY SCALE BAR IS ONE INCH ON ORIGINAL DRAWING. IF NOT ONE INCH ON THIS SHEET, ADJUST SCALE ACCORDINGLY.	WASTEWATER TREATMENT PLANT UPGRADING	ACTIVATED SLUDGE BASIN SECTIONS	DRAWING NUMBER M431 SHEET 176 OF 343

C:\PwWorking\SAC\dms94661\ 420M-011.dwg 11/17/10 18:10

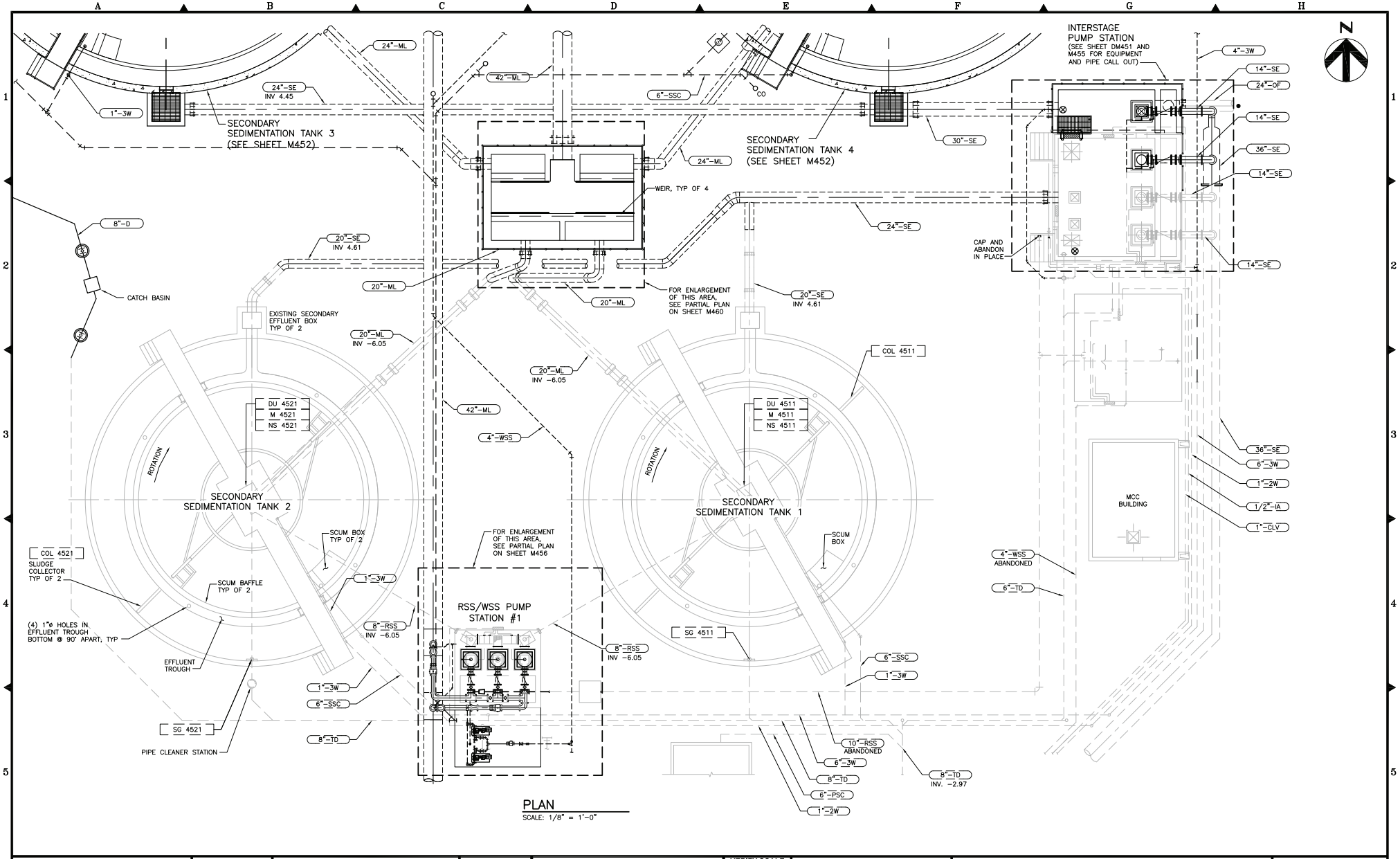

PLAN
SCALE: 1/8" = 1'-0"

HDR Engineering, Inc. 3230 El Camino Real Suite 200 Irvine, Ca. 92602-1377	DESIGNED AO DRAWN NK/SL CHECKED GG	SUBMITTED ____ DATE ____ APPROVED ____ DATE ____	FILE – DATE –	GOLETA SANITARY DISTRICT APPROVED ____ DATE ____ GENERAL MANAGER / DISTRICT ENGINEER RCE No. 18109	VERIFY SCALE BAR IS ONE INCH ON ORIGINAL DRAWING. IF NOT ONE INCH ON THIS SHEET, ADJUST SCALE ACCORDINGLY.	WASTEWATER TREATMENT PLANT UPGRADING	SECONDARY SEDIMENTATION TANKS 1 AND 2 PLAN	DRAWING NUMBER M451 SHEET 177 OF 343

C:\PwWorking\SAC\dms946611\ 450M-001.dwg 11/17/10_18:10

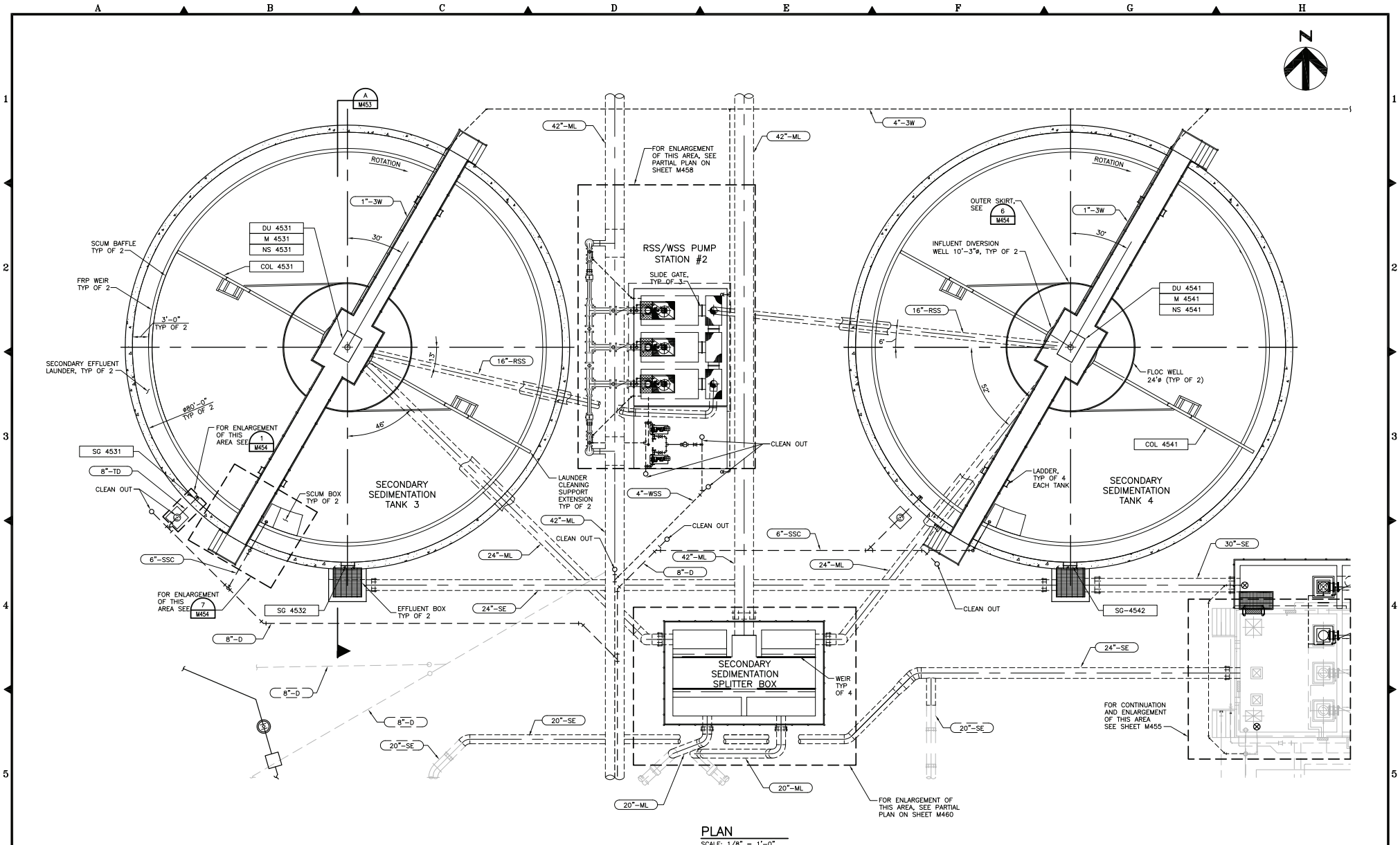

PLAN

SCALE: 1/8" = 1'-0"

HDR Engineering, Inc. 3230 El Camino Real Suite 200 Irvine, Ca. 92602-1377	DESIGNED AO DRAWN SL CHECKED GG	SUBMITTED _____ DATE _____ APPROVED _____ DATE _____	FILE – DATE –	GOLETA SANITARY DISTRICT APPROVED _____ DATE _____ GENERAL MANAGER / DISTRICT ENGINEER RCE No. 18109	VERIFY SCALE BAR IS ONE INCH ON ORIGINAL DRAWING. 0 1 IF NOT ONE INCH ON THIS SHEET, ADJUST SCALE ACCORDINGLY.	WASTEWATER TREATMENT PLANT UPGRADING	SECONDARY SEDIMENTATION TANKS 3 AND 4 PLAN AND EQUIPMENT LIST DRAWING NUMBER M452 SHEET 178 OF 343

C:\PwWorking\SAC\dms946611\ 450M-002.dwg 11/17/10 18:10

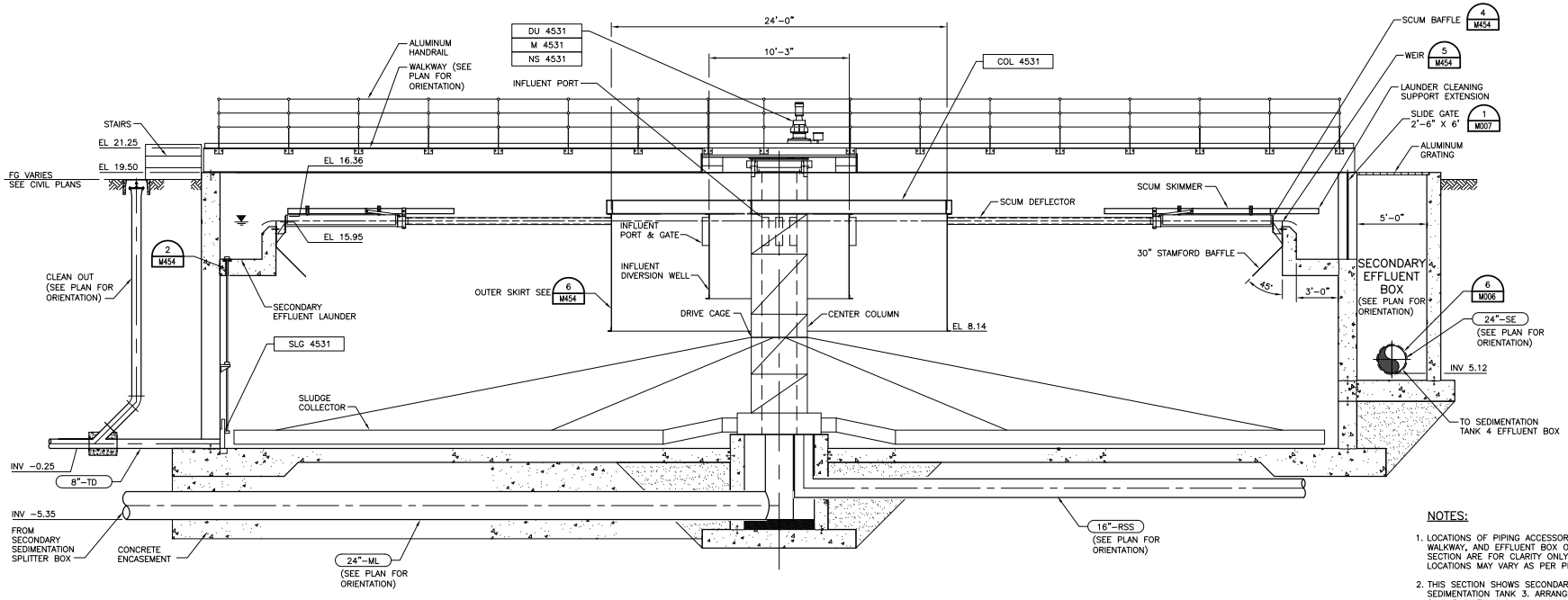

NOTES:

1. LOCATIONS OF PIPING ACCESSORIES, WALKWAY, AND EFFLUENT BOX ON THIS SECTION ARE FOR CLARITY ONLY. ACTUAL LOCATIONS MAY VARY AS PER PLAN.
2. THIS SECTION SHOWS SECONDARY SEDIMENTATION TANK 3. ARRANGEMENT IS SIMILAR IN TANK 4.

SECTION A M451
SCALE: 1/4" = 1'-0"

HDR Engineering, Inc. 3230 El Camino Real Suite 200 Irvine, Ca. 92602-1377	DESIGNED AO DRAWN SL CHECKED GG	SUBMITTED DATE APPROVED DATE	FILE – DATE –	GOLETA SANITARY DISTRICT APPROVED DATE GENERAL MANAGER / DISTRICT ENGINEER RCE No. 18109	VERIFY SCALE BAR IS ONE INCH ON ORIGINAL DRAWING. IF NOT ONE INCH ON THIS SHEET, ADJUST SCALE ACCORDINGLY.	WASTEWATER TREATMENT PLANT UPGRADING	SECONDARY SEDIMENTATION TANK 3 SECTION	DRAWING NUMBER M453 SHEET 179 OF 343

C:\PwWorking\SAC\dms946611\ 450M-003.dwg 11/17/10 18:10

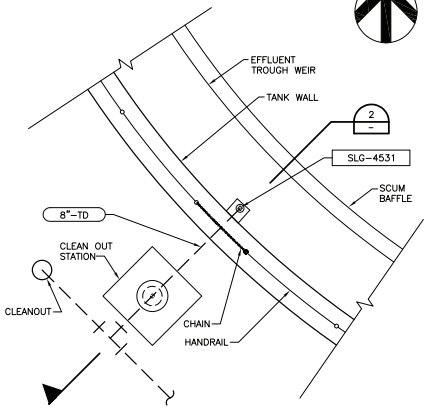

PARTIAL PLAN
3/8" = 1'-0"
1 M452

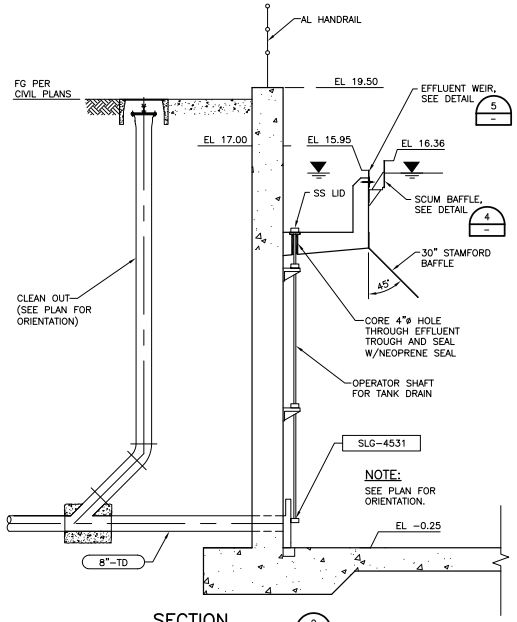

SECTION
3/8" = 1'-0"
2

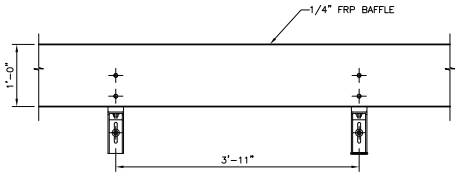

SCUM BAFFLE DETAIL
1" = 1'-0"
4

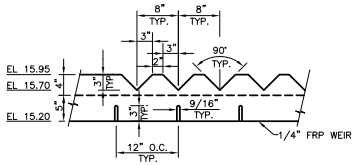

WEIR PLATE DETAIL
1" = 1'-0"
5

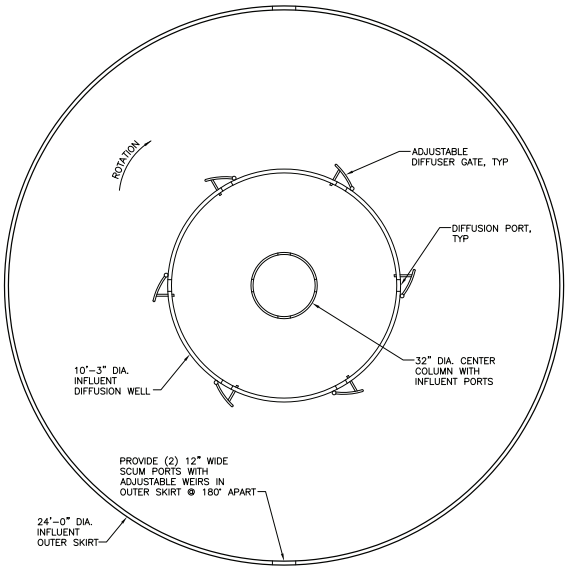

DETAIL
3/8" = 1'-0"
6 M452 M453

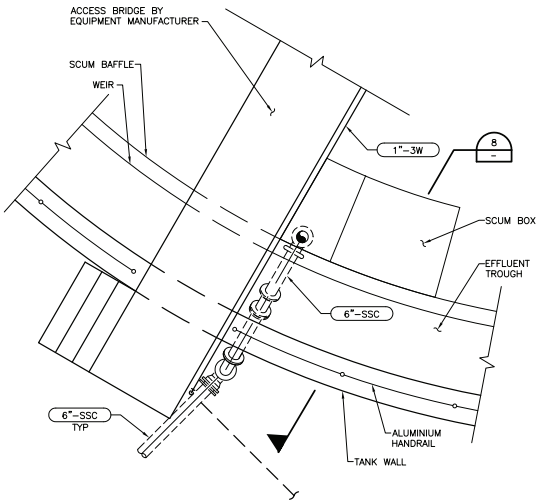

PARTIAL PLAN
3/8" = 1'-0"
7 M452

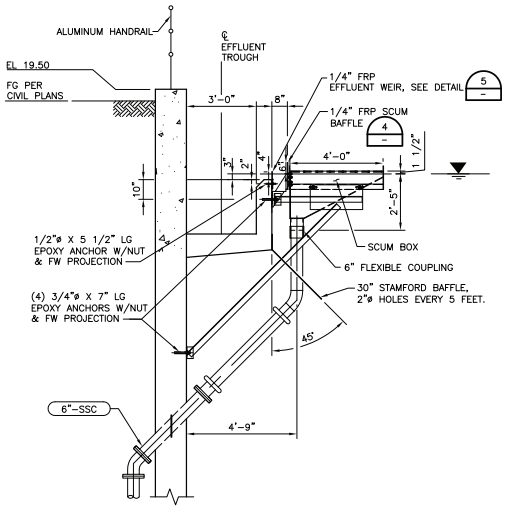

SECTION
3/8" = 1'-0"
8

HDR Engineering, Inc. 3230 El Camino Real Suite 200 Irvine, Ca. 92602-1377	DESIGNED AO DRAWN SL CHECKED GG	SUBMITTED ____ DATE ____ APPROVED ____ DATE ____	FILE – DATE –	GOLETA SANITARY DISTRICT APPROVED ____ DATE ____ GENERAL MANAGER / DISTRICT ENGINEER RCE No. 18109	VERIFY SCALE BAR IS ONE INCH ON ORIGINAL DRAWING. IF NOT ONE INCH ON THIS SHEET, ADJUST SCALE ACCORDINGLY.	WASTEWATER TREATMENT PLANT UPGRADING	SECONDARY SEDIMENTATION TANKS 3 AND 4 PARTIAL PLANS, SECTIONS, AND DETAILS	DRAWING NUMBER M454 SHEET 180 OF 343

C:\PwWorking\SAC\dms94661\ 450M-004.dwg 11/17/10 18:10

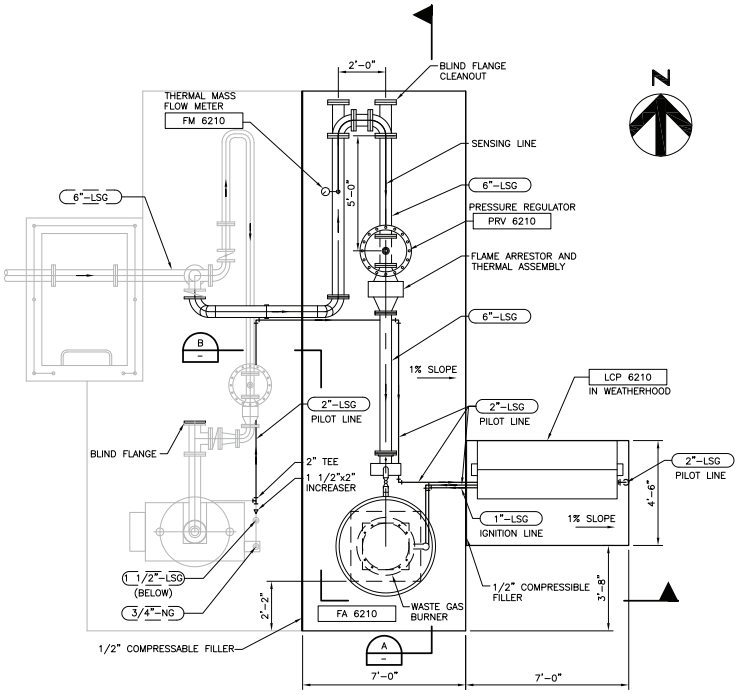

PLAN

SCALE: 3/8" = 1'-0"

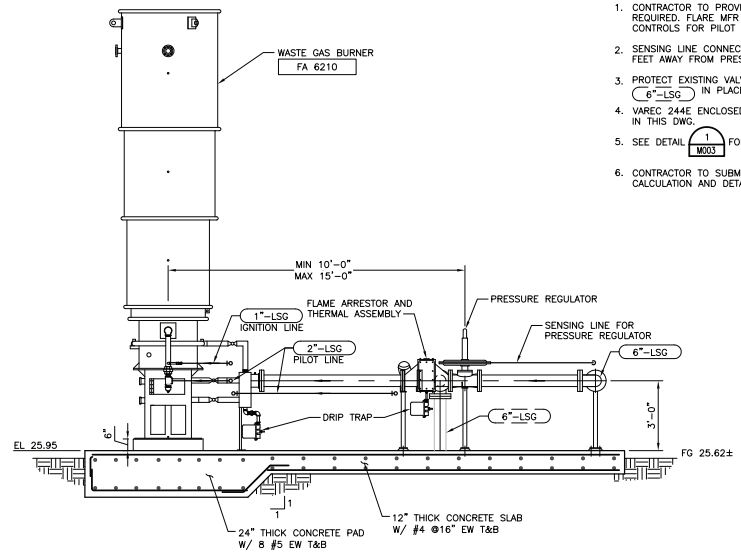

SECTION

SCALE: 3/8" = 1'-0"

CONSTRUCTION NOTES:

1. CONTRACTOR TO PROVIDE PIPING FOR LSG PILOT AS REQUIRED. FLARE MFR TO PROVIDE REQUIRED VALVING AND CONTROLS FOR PILOT LINES.
2. SENSING LINE CONNECTION TO 6"-LSG SHALL BE 10 FEET AWAY FROM PRESSURE REGULATOR IN UPSTREAM.
3. PROTECT EXISTING VALVES, FITTINGS AND EQUIPMENTS ON 6"-LSG IN PLACE.
4. VAREC 244E ENCLOSED FLARE CONFIGURATION IS SHOWN IN THIS DWG.
5. SEE DETAIL 1/M003 FOR FLOOR PIPE SUPPORT.
6. CONTRACTOR TO SUBMIT EQUIPMENT ANCHOR BOLT CALCULATION AND DETAILS FOR APPROVAL.

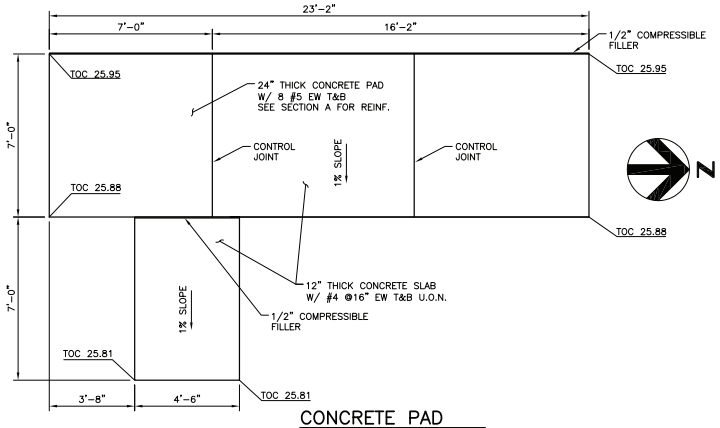

CONCRETE PAD

SCALE: 3/8" = 1'-0"

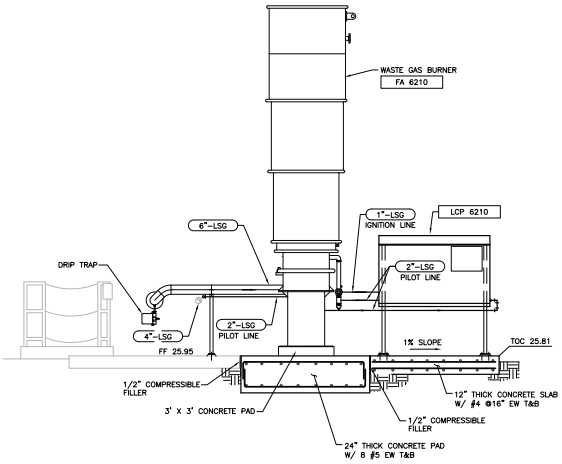

SECTION

SCALE: 3/8" = 1'-0"

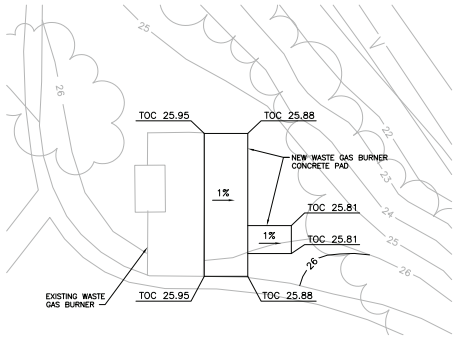

NOTES:

1. ALL ELEVATIONS AND DIMENSIONS ON THIS DRAWING FOR EXISTING STRUCTURES, PIPING, AND EQUIPMENT ARE FROM PLANT RECORD DRAWINGS, CONSTRUCTION SHALL FIELD VERIFY FOR EXACT EXISTING CONDITIONS.
2. FINAL FINISHED GRADE IN THE NEW PAD AREA SHALL BE ADJUSTED TO ALLOW FOR PROPER DRAINAGE.

GRADING PLAN

NTS

HDR Engineering, Inc.
3230 El Camino Real
Suite 200
Irvine, Ca. 92602-1377

DESIGNED SGS
DRAWN SL
CHECKED GG

SUBMITTED _____ DATE _____
APPROVED _____ DATE _____

FILE –
DATE –

GOLETA SANITARY DISTRICT
APPROVED _____ DATE _____
GENERAL MANAGER / DISTRICT ENGINEER RCE No. 18109

VERIFY SCALE
BAR IS ONE INCH ON ORIGINAL DRAWING.
IF NOT ONE INCH ON THIS SHEET, ADJUST SCALE ACCORDINGLY.

WASTEWATER TREATMENT PLANT UPGRADING

WASTE GAS BURNER
PLAN & SECTIONS

DRAWING NUMBER M603
SHEET 195 OF 343

C:\PwWorking\SAC\dms946611\ 600M-004.dwg 11/17/10 18:10

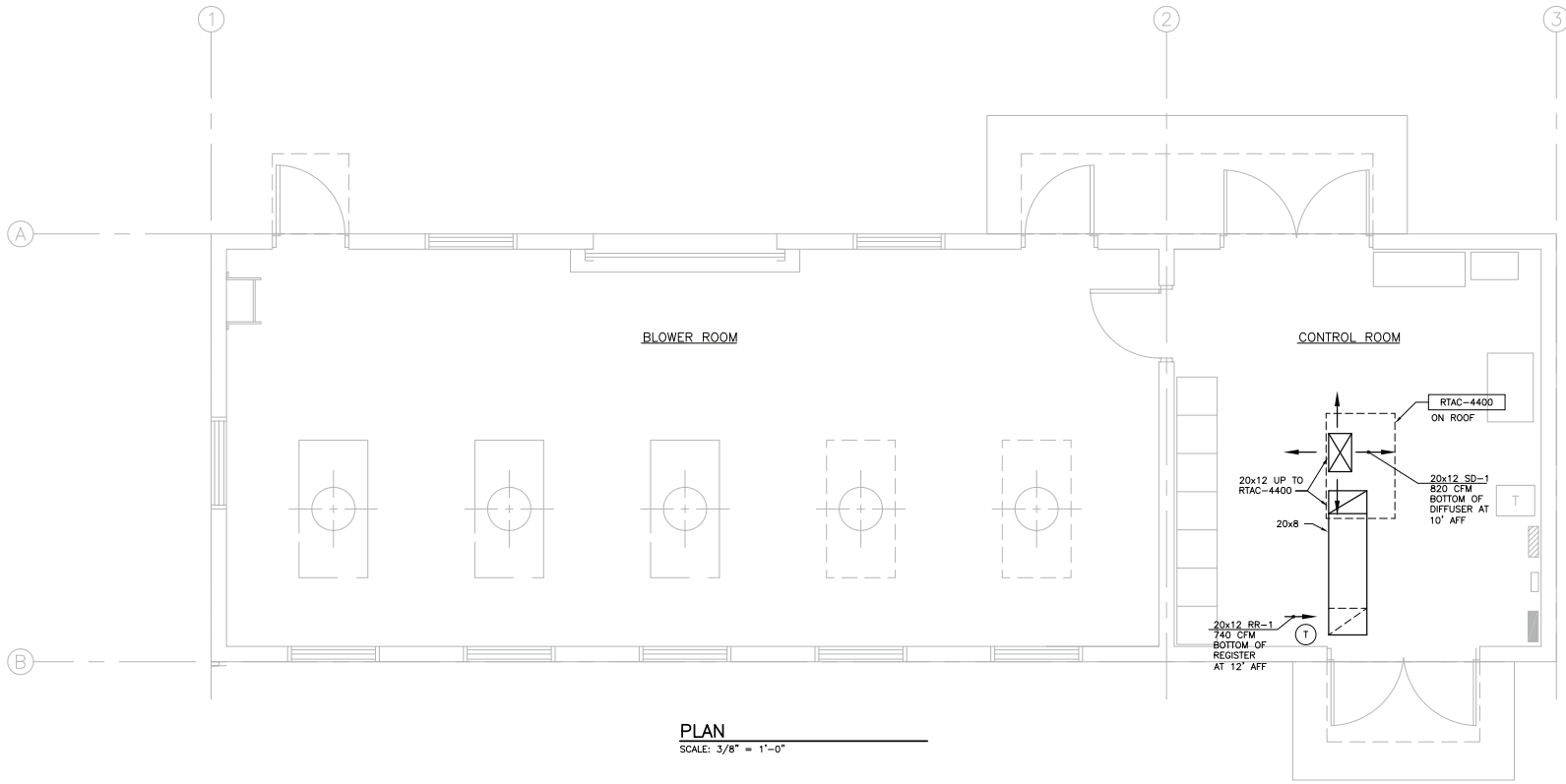

PLAN

SCALE: 3/8" = 1'-0"

REGISTERED PROFESSIONAL ENGINEER
THEODORE H. KONTOPLIAS
NO. M29378
EXP. 6-30-11
MECHANICAL
STATE OF CALIFORNIA

HDR Engineering, Inc. 3230 El Camino Real Suite 200 Irvine, Ca. 92602-1377	DESIGNED TK DRAWN SL CHECKED GG	SUBMITTED ____ DATE ____ APPROVED ____ DATE ____	FILE – DATE –	GOLETA SANITARY DISTRICT APPROVED ____ DATE ____ GENERAL MANAGER / DISTRICT ENGINEER RCE No. 18109	VERIFY SCALE BAR IS ONE INCH ON ORIGINAL DRAWING. IF NOT ONE INCH ON THIS SHEET, ADJUST SCALE ACCORDINGLY.	WASTEWATER TREATMENT PLANT UPGRADING	BLOWER BUILDING CONTROL ROOM HVAC PLAN

DRAWING NUMBER H431

SHEET 210 OF 343

C:\PwWorking\SAC\d0146947_430H-001.dwg 11/17/10_18:12

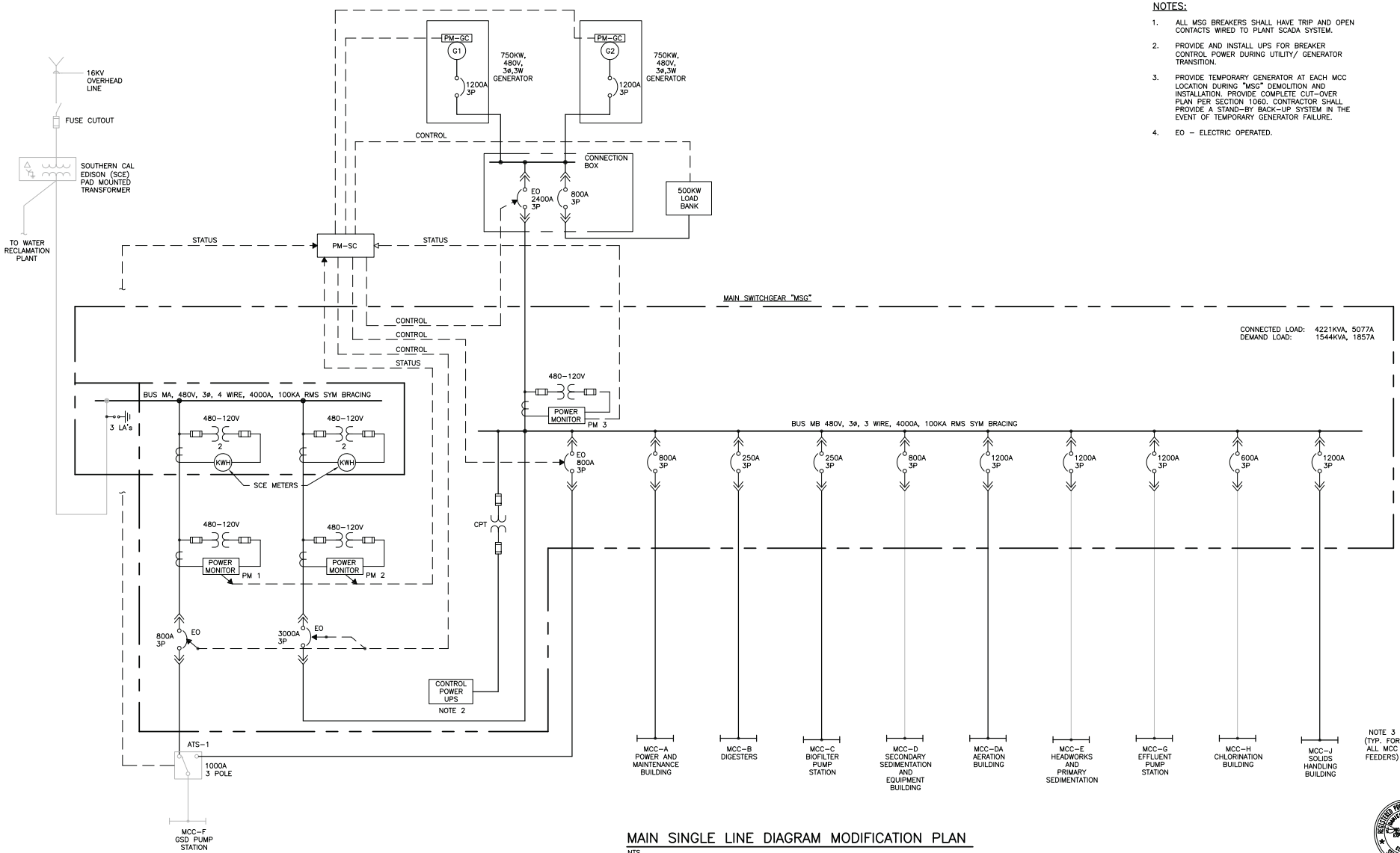

NOTES:

1. ALL MSG BREAKERS SHALL HAVE TRIP AND OPEN CONTACTS WIRED TO PLANT SCADA SYSTEM.
2. PROVIDE AND INSTALL UPS FOR BREAKER CONTROL POWER DURING UTILITY/ GENERATOR TRANSITION.
3. PROVIDE TEMPORARY GENERATOR AT EACH MCC LOCATION DURING "MSG" DEMOLITION AND INSTALLATION. PROVIDE COMPLETE CUT-OVER PLAN PER SECTION 1060. CONTRACTOR SHALL PROVIDE A STAND-BY BACK-UP SYSTEM IN THE EVENT OF TEMPORARY GENERATOR FAILURE.
4. EO – ELECTRIC OPERATED.

MAIN SINGLE LINE DIAGRAM MODIFICATION PLAN

NTS

HDR Engineering, Inc. 3230 El Camino Real Suite 200 Irvine, Ca. 92602-1377	DESIGNED NK DRAWN EGS CHECKED	SUBMITTED DATE APPROVED DATE	FILE 00E-002.dwg DATE –	GOLETA SANITARY DISTRICT APPROVED DATE GENERAL MANAGER / DISTRICT ENGINEER RCE No. 18109	VERIFY SCALE BAR IS ONE INCH ON ORIGINAL DRAWING. IF NOT ONE INCH ON THIS SHEET, ADJUST SCALE ACCORDINGLY.	WASTEWATER TREATMENT PLANT UPGRADING	ELECTRICAL MAIN SINGLE LINE DIAGRAM MODIFICATION PLAN

DRAWING NUMBER E002

SHEET 216 OF 343

C:\PwWorking\SAC\dms98091\ 00E-002.dwg 11/17/10 18:12

NOTE:

1. MANHOLE MH-34, MH-39, MH-40, AND MH-50 ARE NEW. PROVIDE 4'L X 4'W X 4'H JENSEN PRECAST, OR EQUAL.
2. HANDHOLE HH-50 IS NEW. PROVIDE 3'L X 2'W X 3'H JENSEN PRECAST, OR EQUAL.
3. CUT AND PATCH AC PAVEMENT IN ALL DUCTBANK LOCATIONS THROUGH EXISTING DRIVEWAY.
4. ALL DUCTBANKS SHALL BE ENCASED IN RED SLURRY CONCRETE. DUCTBANKS SHALL BE REINFORCED WHERE INDICATED.

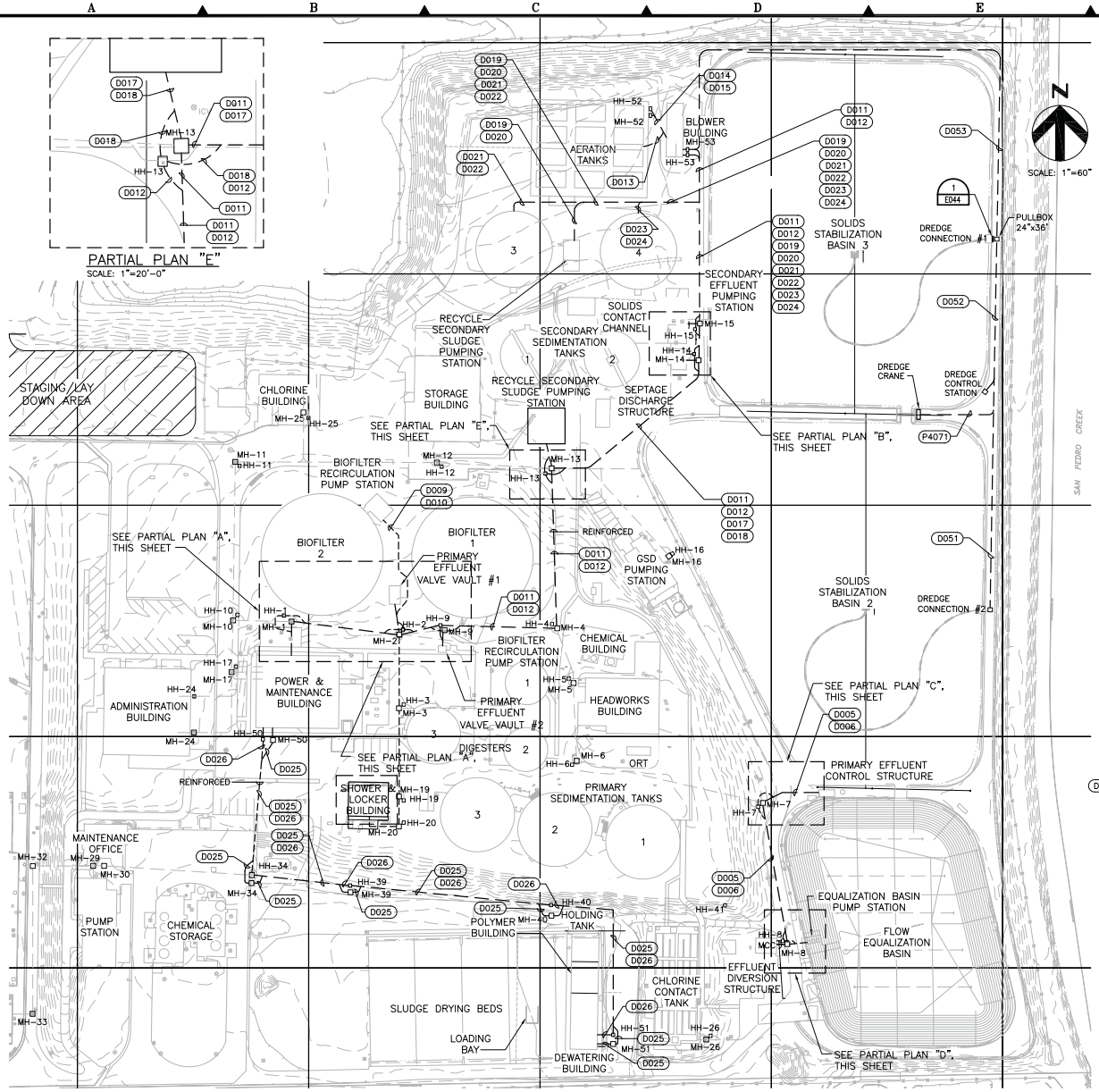

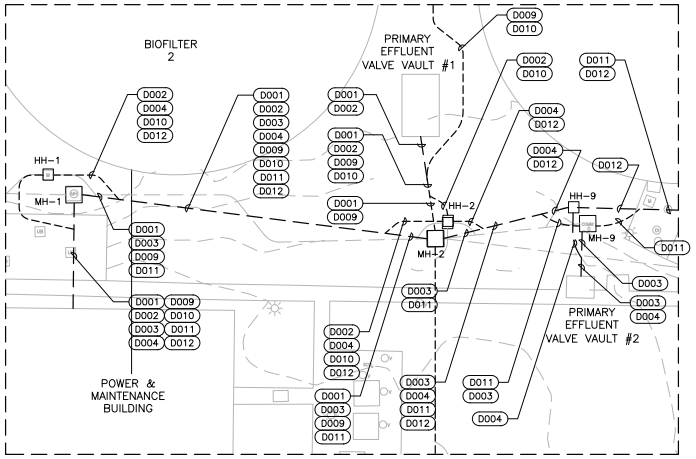

PARTIAL PLAN "A"
SCALE: 1"=20'-0"

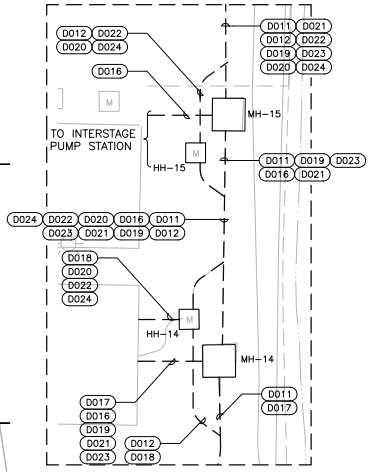

PARTIAL PLAN "B"
SCALE: 1"=10'-0"

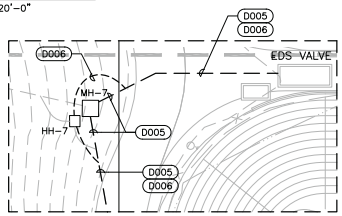

PARTIAL PLAN "C"
SCALE: 1"=20'-0"

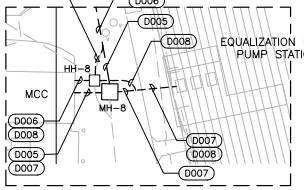

PARTIAL PLAN "D"
SCALE: 1"=20'-0"

DIGALERT
800-227-2600
Call 2 Full Working Days In Advance

REGISTERED PROFESSIONAL ENGINEER
ELECTRICAL
STATE OF CALIFORNIA

HDR Engineering, Inc. 3230 El Camino Real Suite 200 Irvine, Ca. 92602-1377	DESIGNED NK DRAWN EGS CHECKED –	SUBMITTED ____ DATE ____ APPROVED ____ DATE ____	FILE 00E-004.dwg DATE –	GOLETA SANITARY DISTRICT APPROVED ____ DATE ____ GENERAL MANAGER / DISTRICT ENGINEER RCE No. 18109	VERIFY SCALE BAR IS ONE INCH ON ORIGINAL DRAWING. IF NOT ONE INCH ON THIS SHEET, ADJUST SCALE ACCORDINGLY.	WASTEWATER TREATMENT PLANT UPGRADING	ELECTRICAL SITE PLAN DRAWING NUMBER E004 SHEET 218 OF 343

C:\PwWorking\SAC\dms98091\ 00E-004.dwg 11/17/10 18:12

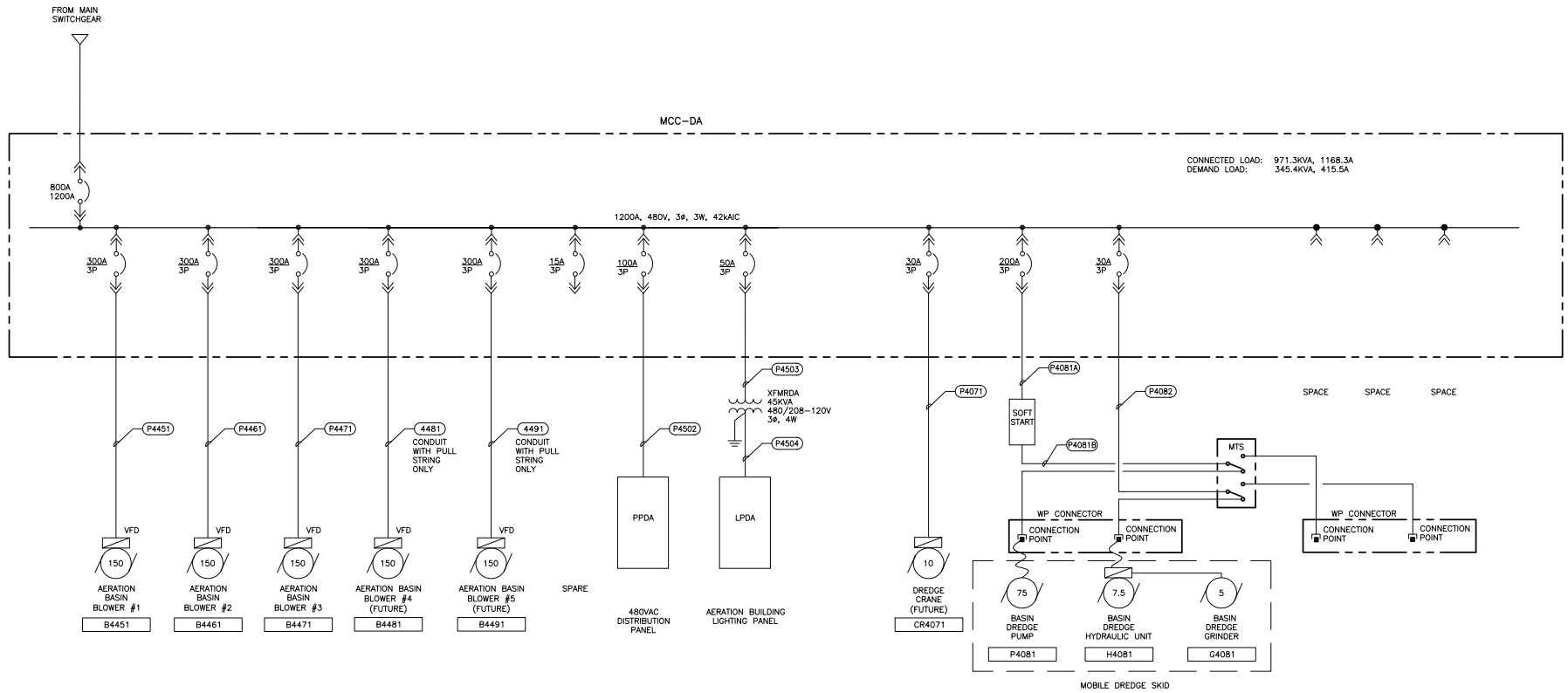

HDR Engineering, Inc. 3230 El Camino Real Suite 200 Irvine, Ca. 92602-1377	DESIGNED DG DRAWN EGS CHECKED DG	SUBMITTED _____ DATE _____ APPROVED _____ DATE _____	FILE 420E-005.dwg DATE _____	GOLETA SANITARY DISTRICT APPROVED _____ DATE _____ GENERAL MANAGER / DISTRICT ENGINEER RCE No. 18109	VERIFY SCALE BAR IS ONE INCH ON ORIGINAL DRAWING. IF NOT ONE INCH ON THIS SHEET, ADJUST SCALE ACCORDINGLY.	WASTEWATER TREATMENT PLANT UPGRADING	AERATION BUILDING MCC-DA SINGLE LINE DIAGRAM

DRAWING NUMBER **E425**

SHEET 258 OF 343

C:\PwWorking\SAC\dms98091\ 420E-005.dwg 11/17/10 18:13

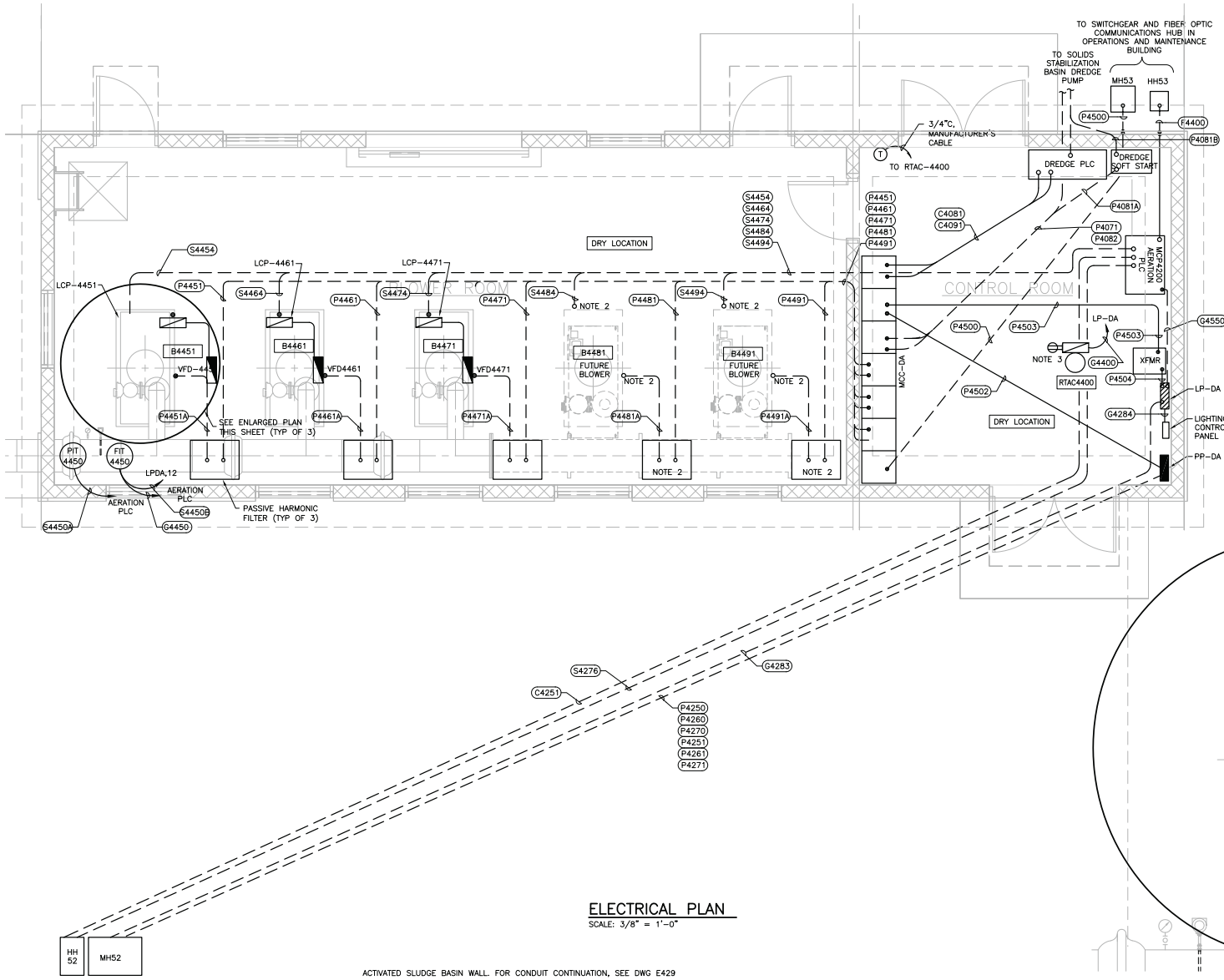

ELECTRICAL PLAN
SCALE: 3/8" = 1'-0"

ENLARGED PLAN
SCALE: 1" =1'-0"

NOTES:

1. BLOWER UNITS ARE A PACKAGE UNIT. COORDINATE WITH THE MANUFACTURER FOR ALL CONTRACTOR INSTALLED WIRING ON THE PACKAGE REQUIRED TO PROVIDE A COMPLETE AND FUNCTIONAL SYSTEM.
2. STUB-UP AND CAP CONDUITS FOR FUTURE USE.
3. PROVIDE AND INSTALL DUPLEX RECEPTACLE AT AC CONTROL PANEL.

REGISTERED PROFESSIONAL ENGINEER — ELECTRICAL — STATE OF CALIFORNIA

HDR Engineering, Inc. 3230 El Camino Real Suite 200 Irvine, Ca. 92602-1377	DESIGNED NK DRAWN EGS CHECKED	SUBMITTED DATE APPROVED DATE	FILE 420E-007.dwg DATE –	GOLETA SANITARY DISTRICT APPROVED DATE GENERAL MANAGER / DISTRICT ENGINEER RCE No. 18109	VERIFY SCALE BAR IS ONE INCH ON ORIGINAL DRAWING. IF NOT ONE INCH ON THIS SHEET, ADJUST SCALE ACCORDINGLY.	WASTEWATER TREATMENT PLANT UPGRADING	BLOWER BUILDING ELECTRICAL PLAN

DRAWING NUMBER E427
SHEET 260 OF 343

C:\PwWorking\SAC\dms98091\ 420E-007.dwg 11/17/10 18:13

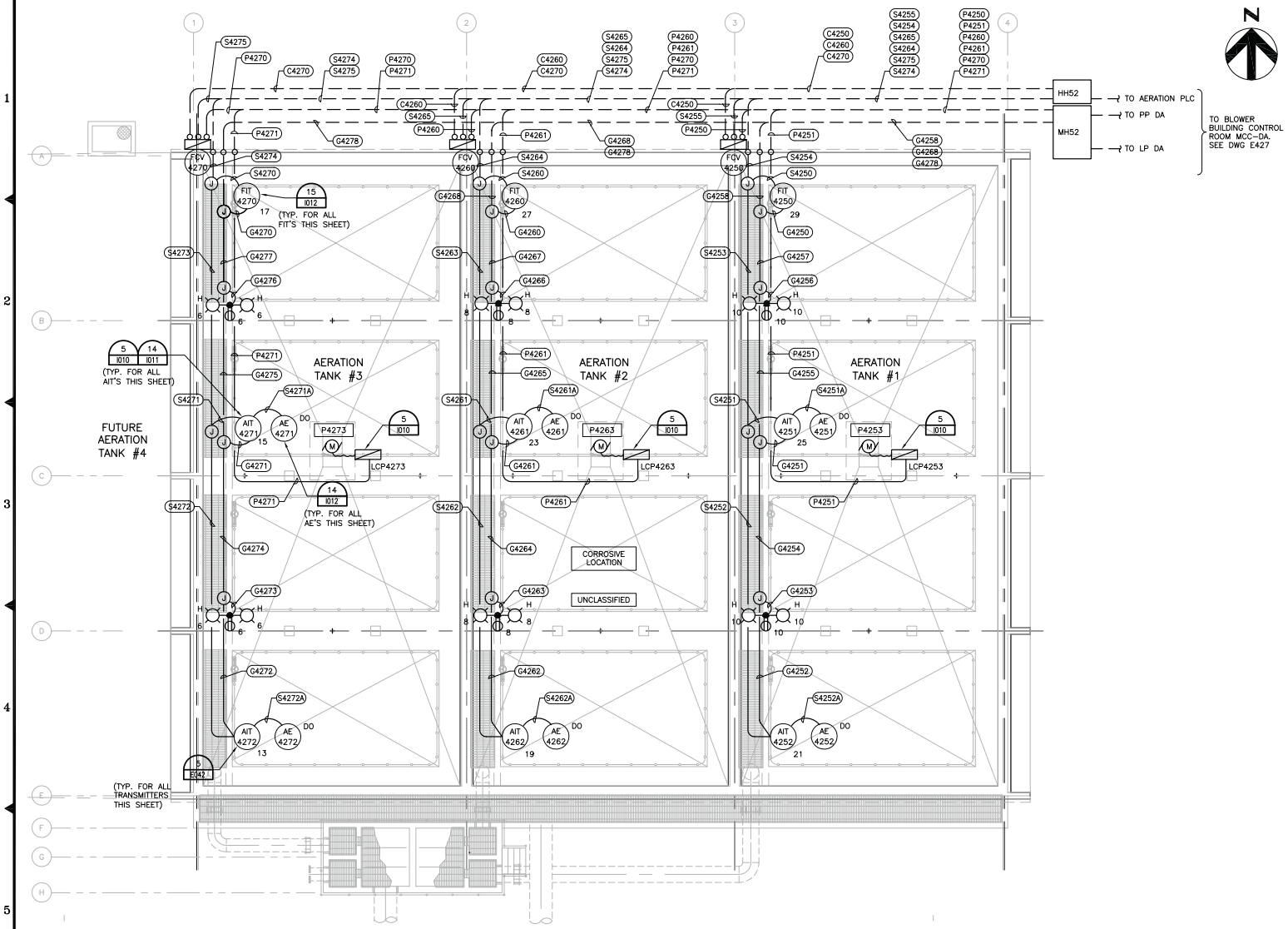

NOTES:

1. ROUTE ABOVE GROUND CONDUITS ALONG THE HANDRAIL.
2. REFER TO DRAWING E040 FOR PANEL SCHEDULE.

ELECTRICAL PLAN

SCALE: 1/8" = 1'-0"

HDR Engineering, Inc. 3230 El Camino Real Suite 200 Irvine, Ca. 92602-1377	DESIGNED NK DRAWN EGS CHECKED –	SUBMITTED ____ DATE ____ APPROVED ____ DATE ____	FILE 420E-009.dwg DATE –	GOLETA SANITARY DISTRICT APPROVED ____ DATE ____ GENERAL MANAGER / DISTRICT ENGINEER RCE No. 18109	VERIFY SCALE BAR IS ONE INCH ON ORIGINAL DRAWING. IF NOT ONE INCH ON THIS SHEET, ADJUST SCALE ACCORDINGLY.	WASTEWATER TREATMENT PLANT UPGRADING	ACTIVATED SLUDGE BASIN ELECTRICAL PLAN	DRAWING NUMBER E429 SHEET 262 OF 343

C:\PwWorking\SAC\dms98091\ 420E-009.dwg 11/17/10 18:13

NOTES:

1. CONTRACTOR SHALL MEGGER TEST EXISTING CONDUCTORS AND REPORT ANY PROBLEMS TO DISTRICT. DISTRICT WILL PROVIDE DIRECTION FOR REPLACEMENT IF REQUIRED.
2. ALL EXTERNAL CONTROL CONDUCTORS SHALL BE RECONNECTED VIA CONTROL TERMINATION CABINET AT END OF MCC LINE-UP.

* DENOTES CRITICAL LOAD; MAINTAIN CONTINUOUS POWER DURING REPLACEMENT.

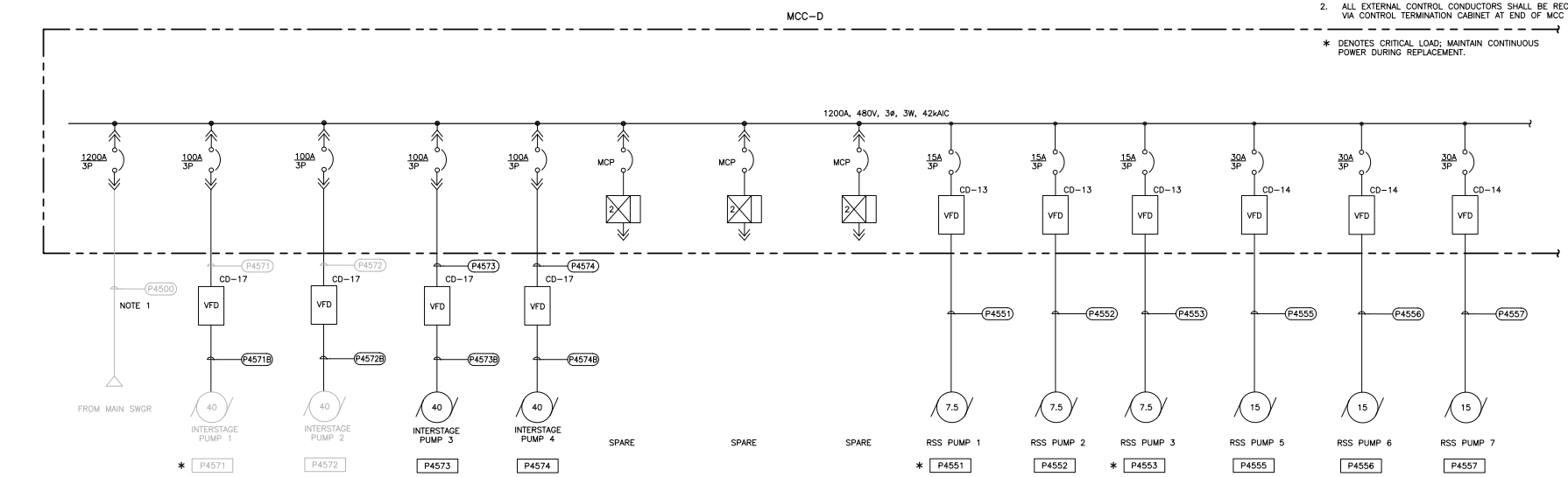

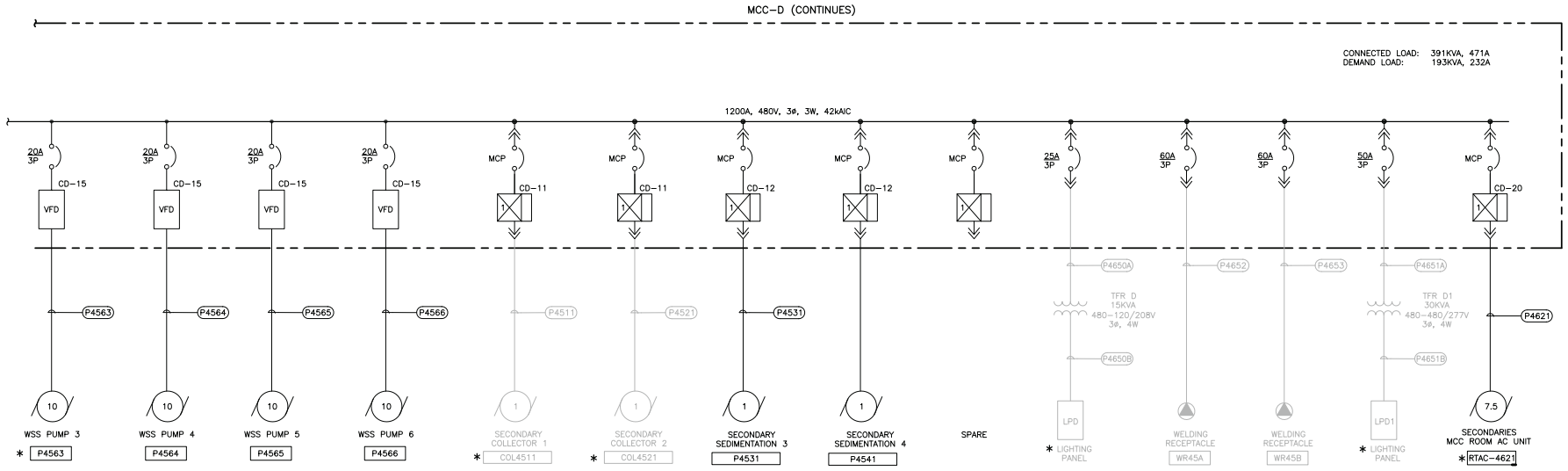

HDR Engineering, Inc.
3230 El Camino Real
Suite 200
Irvine, Ca. 92602-1377

DESIGNED NK
DRAWN EGS
CHECKED DG

SUBMITTED _____ DATE _____
APPROVED _____ DATE _____

FILE 450E-002.dwg
DATE _____

GOLETA SANITARY DISTRICT
APPROVED _____ DATE _____
GENERAL MANAGER / DISTRICT ENGINEER RCE No. 18109

VERIFY SCALE
BAR IS ONE INCH ON ORIGINAL DRAWING.
IF NOT ONE INCH ON THIS SHEET, ADJUST SCALE ACCORDINGLY.

WASTEWATER TREATMENT PLANT UPGRADING

SECONDARY SEDIMENTATION MCC ROOM
MCC-D SINGLE LINE DIAGRAM

DRAWING NUMBER E452
SHEET 264 OF 343

C:\PwWorking\SAC\dms98091\ 450E-002.dwg 11/17/10 18:13

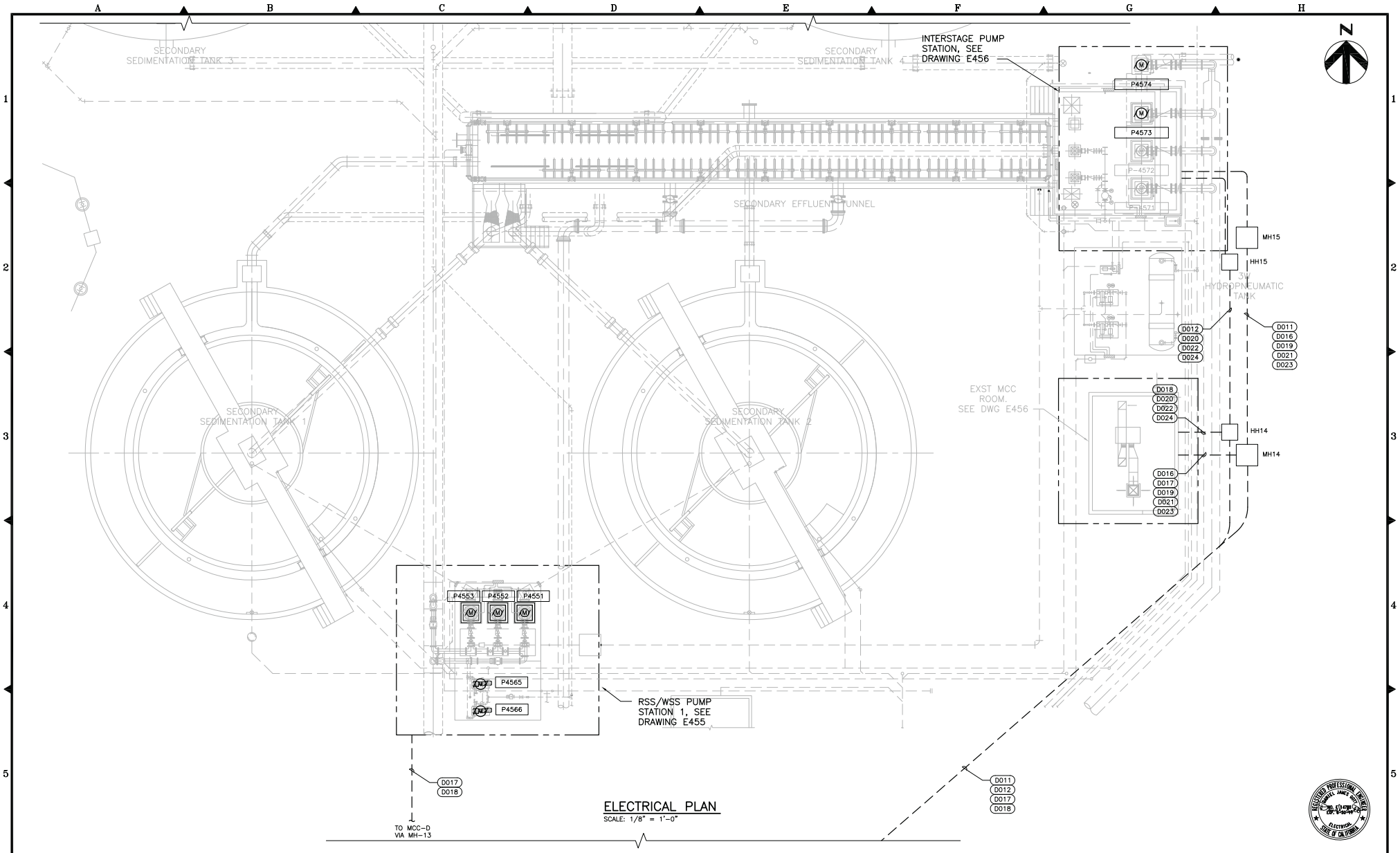

ELECTRICAL PLAN

SCALE: 1/8" = 1'-0"

HDR Engineering, Inc. 3230 El Camino Real Suite 200 Irvine, Ca. 92602-1377	DESIGNED DG DRAWN EGS CHECKED –	SUBMITTED ____ DATE ____ APPROVED ____ DATE ____	FILE 450E-004.dwg DATE –	GOLETA SANITARY DISTRICT APPROVED ____ DATE ____ GENERAL MANAGER / DISTRICT ENGINEER RCE No. 18109	VERIFY SCALE BAR IS ONE INCH ON ORIGINAL DRAWING. IF NOT ONE INCH ON THIS SHEET, ADJUST SCALE ACCORDINGLY.	WASTEWATER TREATMENT PLANT UPGRADING	SECONDARY SEDIMENTATION TANKS 1 AND 2 ELECTRICAL PLAN	DRAWING NUMBER E454 SHEET 266 OF 343

C:\PwWorking\SAC\dms98091\ 450E-004.dwg 11/17/10 18:13

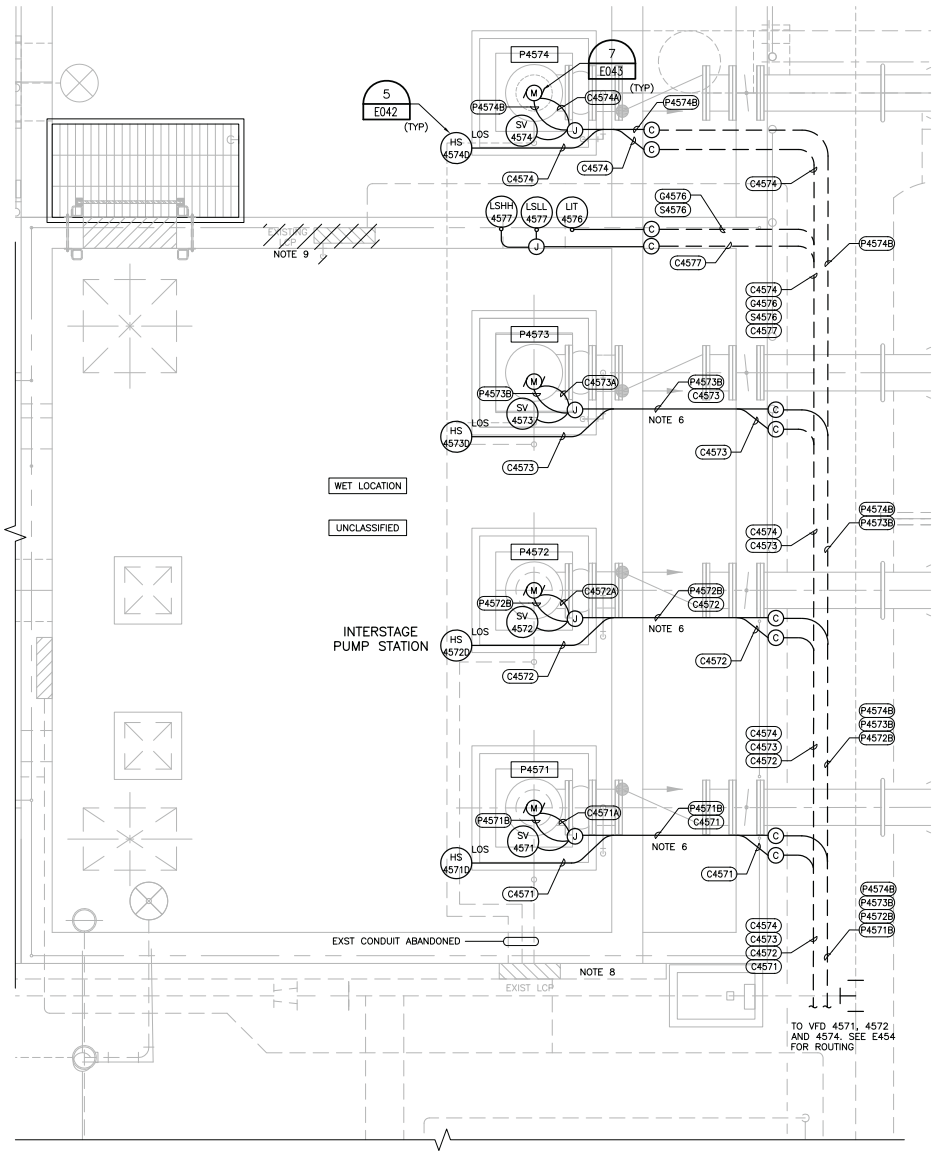

INTERSTAGE PUMP STATION
ELECTRICAL PLAN
SCALE: 1/2" = 1'-0"

N

NOTES:

1. NOT USED.
2. EXISTING CONDUIT CONTINUES TO MH-15. SEE ELECTRICAL SITE PLAN DRAWING E004.
3. EXISTING CONDUIT CONTINUES TO MH-14. SEE ELECTRICAL SITE PLAN DRAWING E004.
4. USE EXISTING CONDUIT AND WIRE BETWEEN MCC-D AND VFD-4572/VFD-4571.
5. USE EXISTING CONDUIT AND WIRE BETWEEN S-PLC AND VFD-4572/VFD-4571.
6. REPLACE EXISTING CONDUIT BACK TO FIRST IN GROUND MANHOLE. ROUTE NEW SURFACE CONDUIT BENEATH PIPE TO PUMP FROM EDGE OF PAD. PROVIDE AND INSTALL ALL NEW POWER AND CONTROL WIRES BACK TO MCC-D AND SECONDARIES PLC.
7. ROUTE ALL NEW LP-D CIRCUITS INTO ELECTRICAL BLDG OVERHEAD TO LP-D.
8. CUT AND CAP EXPOSED CONDUIT. ABANDON CONCEALED CONDUIT IN PLACE.
9. DEMOLISHED EXPOSED BUBBLER CONDUIT. REMOVE WIRE BACK TO SOURCE.

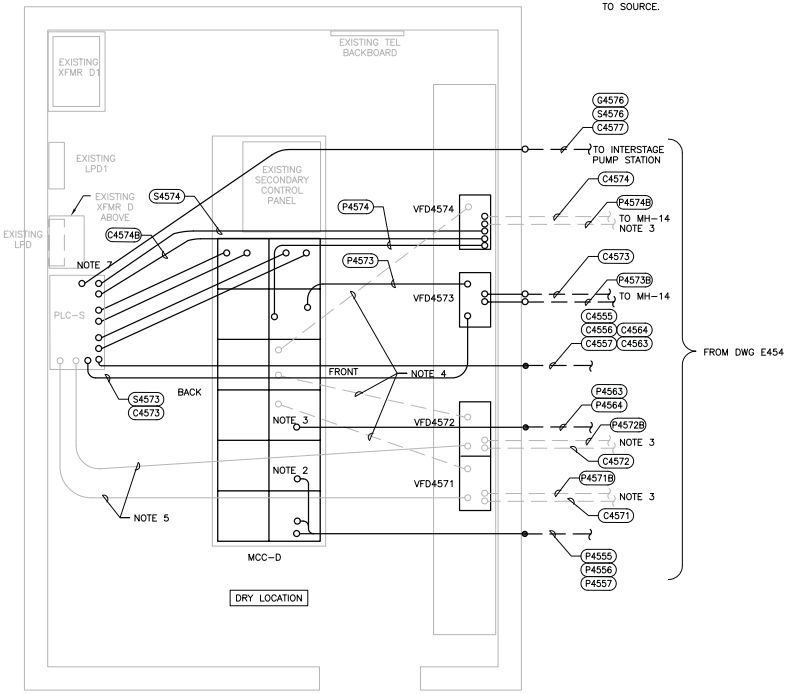

EXST SECONDARY SEDIMENTATION MCC ROOM
ELECTRICAL PLAN
SCALE: 1/2" = 1'-0"

REGISTERED PROFESSIONAL ENGINEER
DANIEL JAMES WITT
C-38 ELECTRICAL
ELECTRICAL
STATE OF CALIFORNIA

HDR Engineering, Inc. 3230 El Camino Real Suite 200 Irvine, Ca. 92602-1377	DESIGNED NK DRAWN EGS CHECKED –	SUBMITTED ____ DATE ____ APPROVED ____ DATE ____	FILE 450E-006.dwg DATE –	GOLETA SANITARY DISTRICT APPROVED ____ DATE ____ GENERAL MANAGER / DISTRICT ENGINEER RCE No. 18109	VERIFY SCALE BAR IS ONE INCH ON ORIGINAL DRAWING. IF NOT ONE INCH ON THIS SHEET, ADJUST SCALE ACCORDINGLY.	WASTEWATER TREATMENT PLANT UPGRADING	INTERSTAGE PUMP STATION AND SECONDARY SEDIMENTATION MCC ROOM ELECTRICAL PLAN	DRAWING NUMBER E456 SHEET 268 OF 343

C:\PwWorking\SAC\dms98091\ 450E-006.dwg 11/17/10 18:13

NOTES:

1. REFER TO DRAWING E004 FOR DUCTBANK ROUTING.
2. REFER TO DRAWING E458 FOR CONDUIT CALL-OUTS.

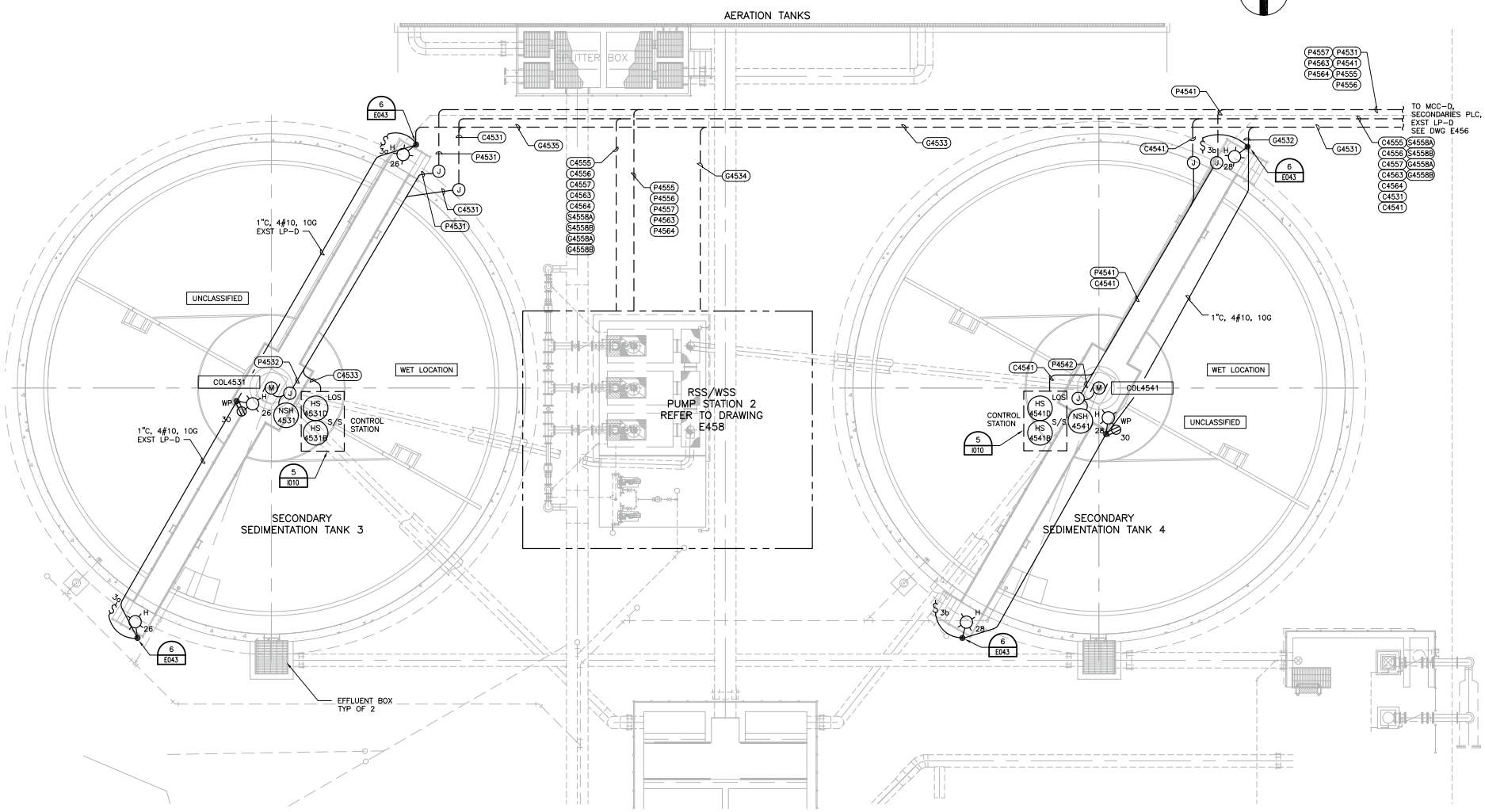

ELECTRICAL PLAN

SCALE: 1/8" = 1'-0"

HDR Engineering, Inc. 3230 El Camino Real Suite 200 Irvine, Ca. 92602-1377	DESIGNED NK DRAWN EGS CHECKED –	SUBMITTED ____ DATE ____ APPROVED ____ DATE ____	FILE 450E-007.dwg DATE –	GOLETA SANITARY DISTRICT APPROVED ____ DATE ____ GENERAL MANAGER / DISTRICT ENGINEER RCE No. 18109	VERIFY SCALE BAR IS ONE INCH ON ORIGINAL DRAWING. IF NOT ONE INCH ON THIS SHEET, ADJUST SCALE ACCORDINGLY.	WASTEWATER TREATMENT PLANT UPGRADING	SECONDARY SEDIMENTATION TANKS 3 AND 4 ELECTRICAL PLAN	DRAWING NUMBER E457 SHEET 269 OF 343

C:\PwWorking\SAC\dms98091\ 450E-007.dwg 11/17/10 18:13

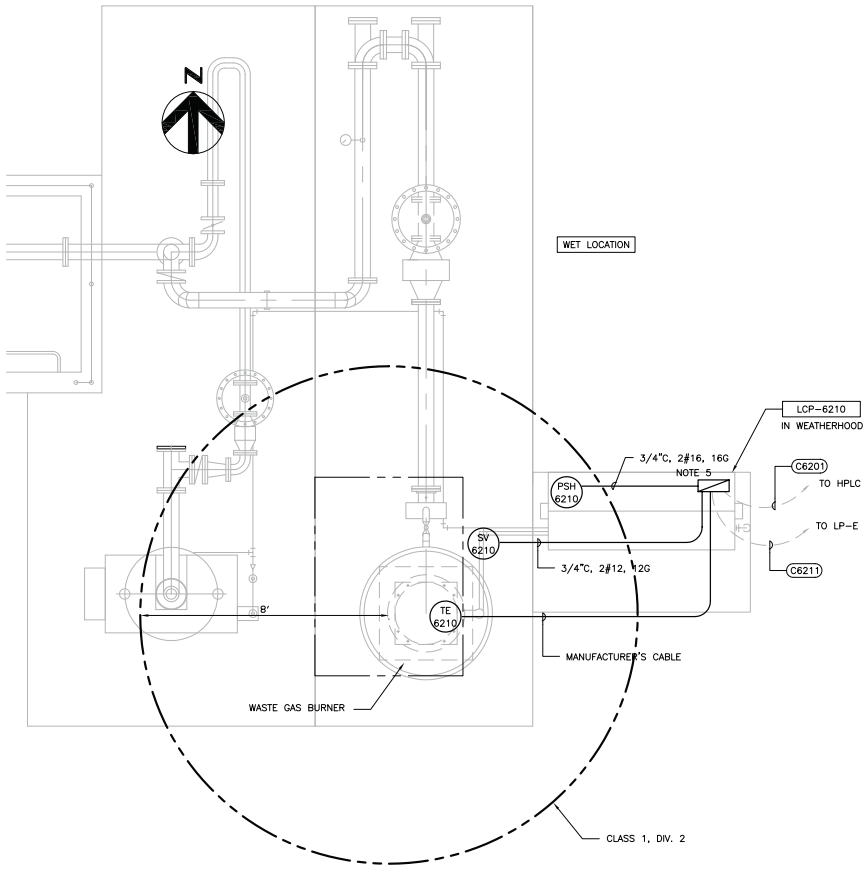

ELECTRICAL PLAN

SCALE: 1/2" = 1'-0"

NOTES:

1. REUSE EXISTING CONDUIT C5001 AND C5001A. RENAME CONDUITS C6201 AND C6211. EXTEND CONDUIT AS NECESSARY TO ACCOMODATE NEW WASTE GAS BURNER.
2. REFER TO DRAWING E034, E035, E036 AND E037 FOR CONDUIT SCHEDULE.
3. REUSE EXISTING CIRCUIT BREAKER AT PANEL LP-E.
4. PROVIDE CONDUIT SEALS FOR ALL CONDUITS INTO PANEL RETURNING FROM CLASSIFIED AREA.
5. MOUNT NEW LCP-6210 ON EXISTING BACK PANEL BENEATH WEATHER HOOD.

HDR Engineering, Inc. 3230 El Camino Real Suite 200 Irvine, Ca. 92602-1377	DESIGNED NK DRAWN EGS CHECKED	SUBMITTED DATE APPROVED DATE	FILE 500E-001.dwg DATE –	GOLETA SANITARY DISTRICT APPROVED DATE GENERAL MANAGER / DISTRICT ENGINEER RCE No. 18109	VERIFY SCALE BAR IS ONE INCH ON ORIGINAL DRAWING. IF NOT ONE INCH ON THIS SHEET, ADJUST SCALE ACCORDINGLY.	WASTEWATER TREATMENT PLANT UPGRADING	WASTE GAS BURNER ELECTRICAL PLAN	DRAWING NUMBER E501 SHEET – OF 343

C:\PwWorking\SAC\dms98091\ 500E-001.dwg 11/17/10 18:13

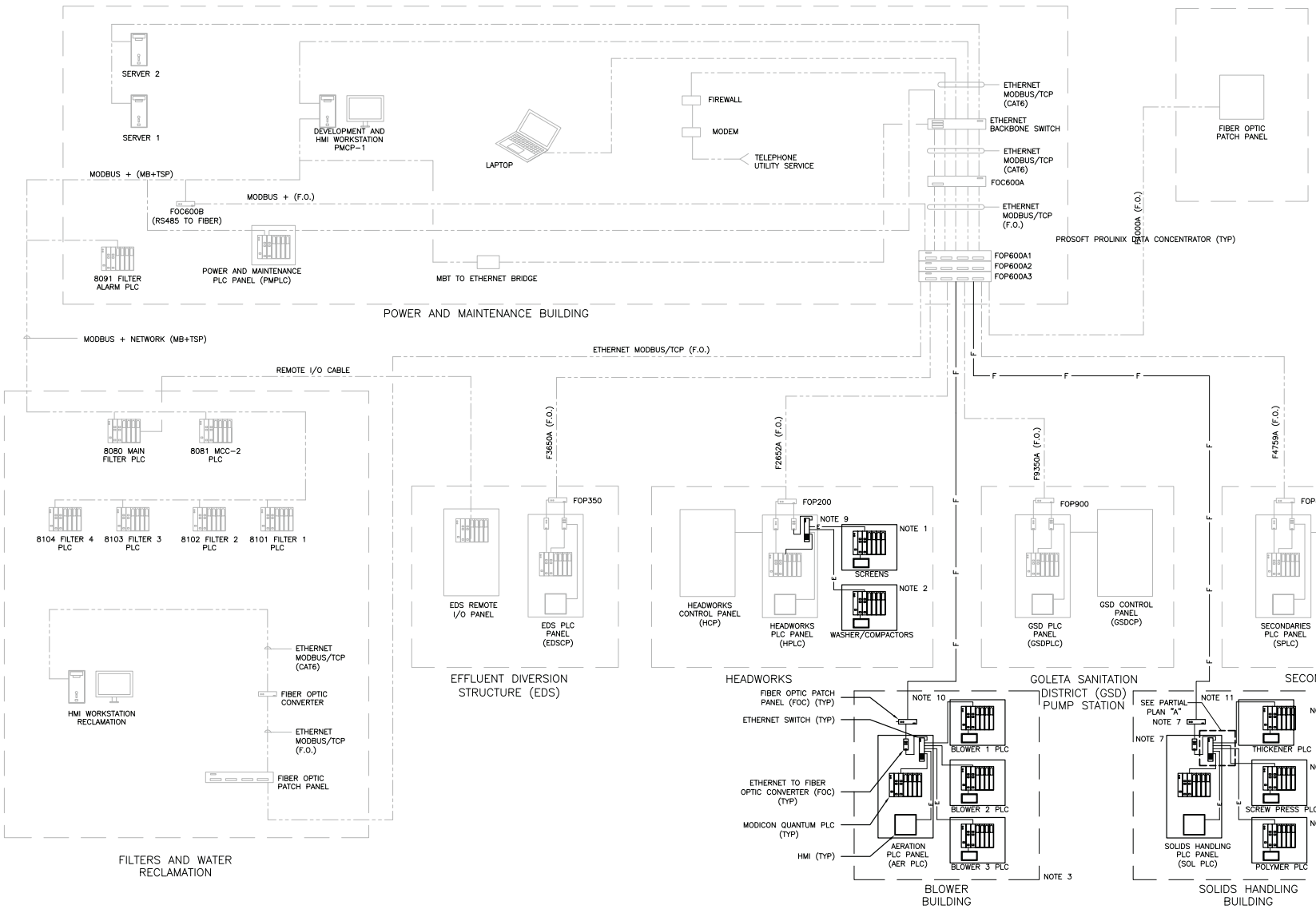

NOTE:

1. TO BE PROVIDED BY HEADWORKS SCREENS SUPPLIER
2. TO BE PROVIDED BY WASHER/COMPACTOR SUPPLIER
3. TO BE PROVIDED BY AERATION BLOWER SYSTEM SUPPLIER
4. TO BE PROVIDED BY THICKENER SUPPLIER
5. TO BE PROVIDED BY SCREW PRESS SUPPLIER
6. TO BE PROVIDED BY POLYMER FEED SYSTEM EQUIPMENT SUPPLIER.
7. TO BE PROVIDED BY CONTRACTOR
8. EXISTING PLC'S AND HMI'S RECEIVING NEW SIGNALS SHALL BE REPROGRAMMED.
9. COMMUNICATION PROTOCOL TO SCREENS AND WASHER/COMPACTOR PLC'S (VENDER SUPPLIED SHALL BE MODBUS/TCP
10. COMMUNICATION PROTOCOL TO BLOWER PLC'S MODBUS/TCP
11. COMMUNICATION PROTOCOL TO THICKENER/ SCREW PRESS AND POLYMER PLC SHALL BE MODBUS/TCP
12. PROSOFT PROLINIX DATA CONCENTRATOR (TYP) SHALL BE USED IF ALLEN BRADLEY SLC500 PLCS ARE BEING PROVIDED.

ABBREVIATIONS:

CAT6	EIA/TIA 586B CATEGORY 6 CABLE
F.O.	FIBER OPTIC CABLE
HMI	HUMAN-MACHINE INTERFACE
MB+TSP	MODBUS PLUS TWISTED SHIELDED PAIR
TEL	TELEPHONE CABLE
FOC	FIBER OPTIC CONVERTER
FOP	FIBER OPTIC TERMINATION PANEL

HDR Engineering, Inc.
3230 El Camino Real
Suite 200
Irvine, Ca. 92602-1377

DESIGNED RG
DRAWN EGS
CHECKED RG

SUBMITTED _____ DATE _____
APPROVED _____ DATE _____

FILE 001-003.dwg
DATE _____

GOLETA SANITARY DISTRICT
APPROVED _____ DATE _____
GENERAL MANAGER / DISTRICT ENGINEER RCE No. 18109

VERIFY SCALE
BAR IS ONE INCH ON ORIGINAL DRAWING.
0 1
IF NOT ONE INCH ON THIS SHEET, ADJUST SCALE ACCORDINGLY.

WASTEWATER TREATMENT PLANT UPGRADING

SCADA BLOCK DIAGRAM

DRAWING NUMBER I003
SHEET 292 OF 343

C:\PwWorking\SAC\dms95123\ 001-003.dwg 11/17/10 18:13

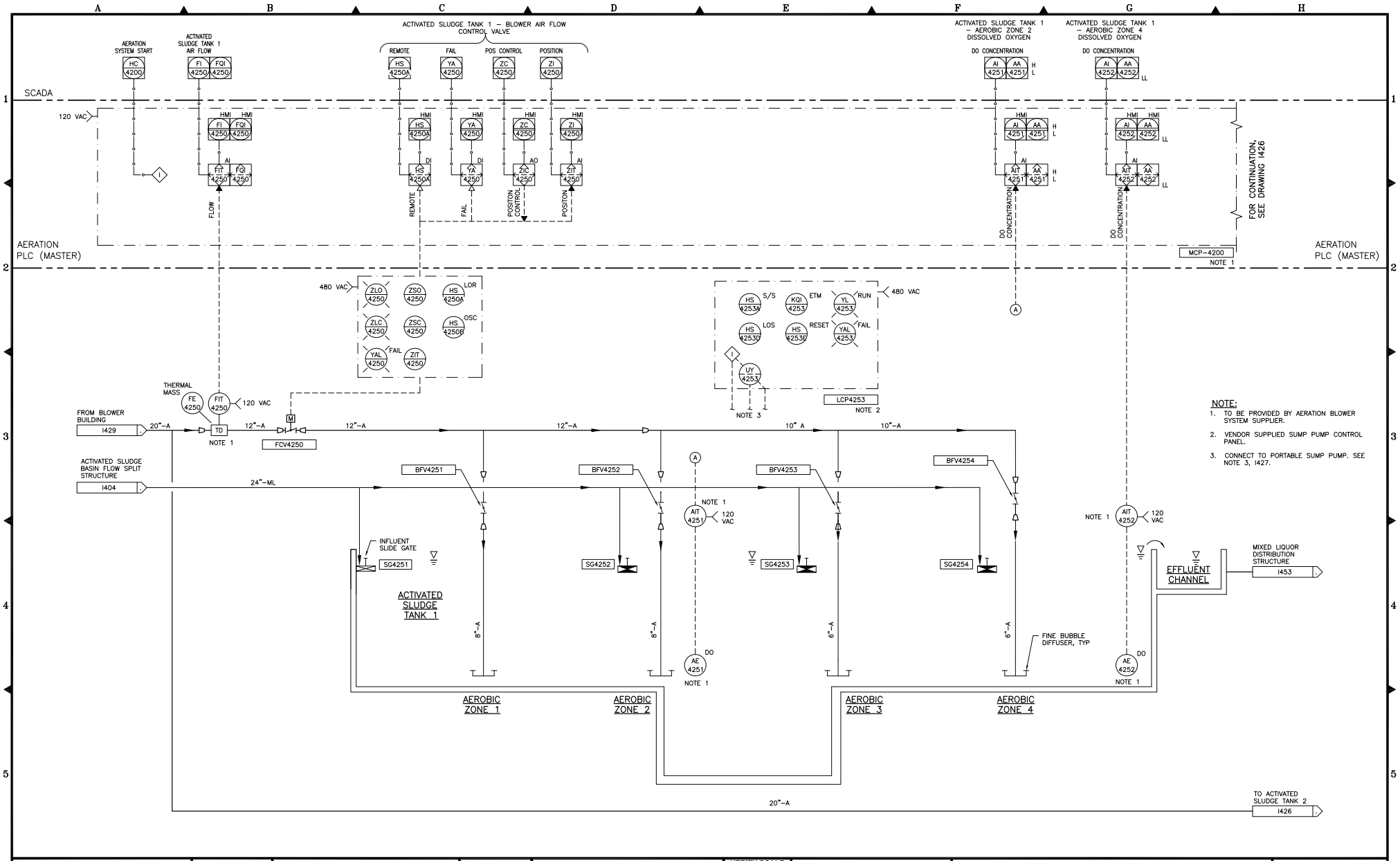

HDR Engineering, Inc. 3230 El Camino Real Suite 200 Irvine, Ca. 92602-1377	DESIGNED RG DRAWN RJG CHECKED RG	SUBMITTED ____ DATE ____ APPROVED ____ DATE ____	FILE 001-425.dwg DATE –	GOLETA SANITARY DISTRICT APPROVED ____ DATE ____ GENERAL MANAGER / DISTRICT ENGINEER RCE No. 18109	VERIFY SCALE BAR IS ONE INCH ON ORIGINAL DRAWING. IF NOT ONE INCH ON THIS SHEET, ADJUST SCALE ACCORDINGLY.	WASTEWATER TREATMENT PLANT UPGRADING	ACTIVATED SLUDGE TANK 1	DRAWING NUMBER I425 SHEET 311 OF 343

C:\PwWorking\SAC\dms95123\ 001-425.dwg 11/17/10 18:14

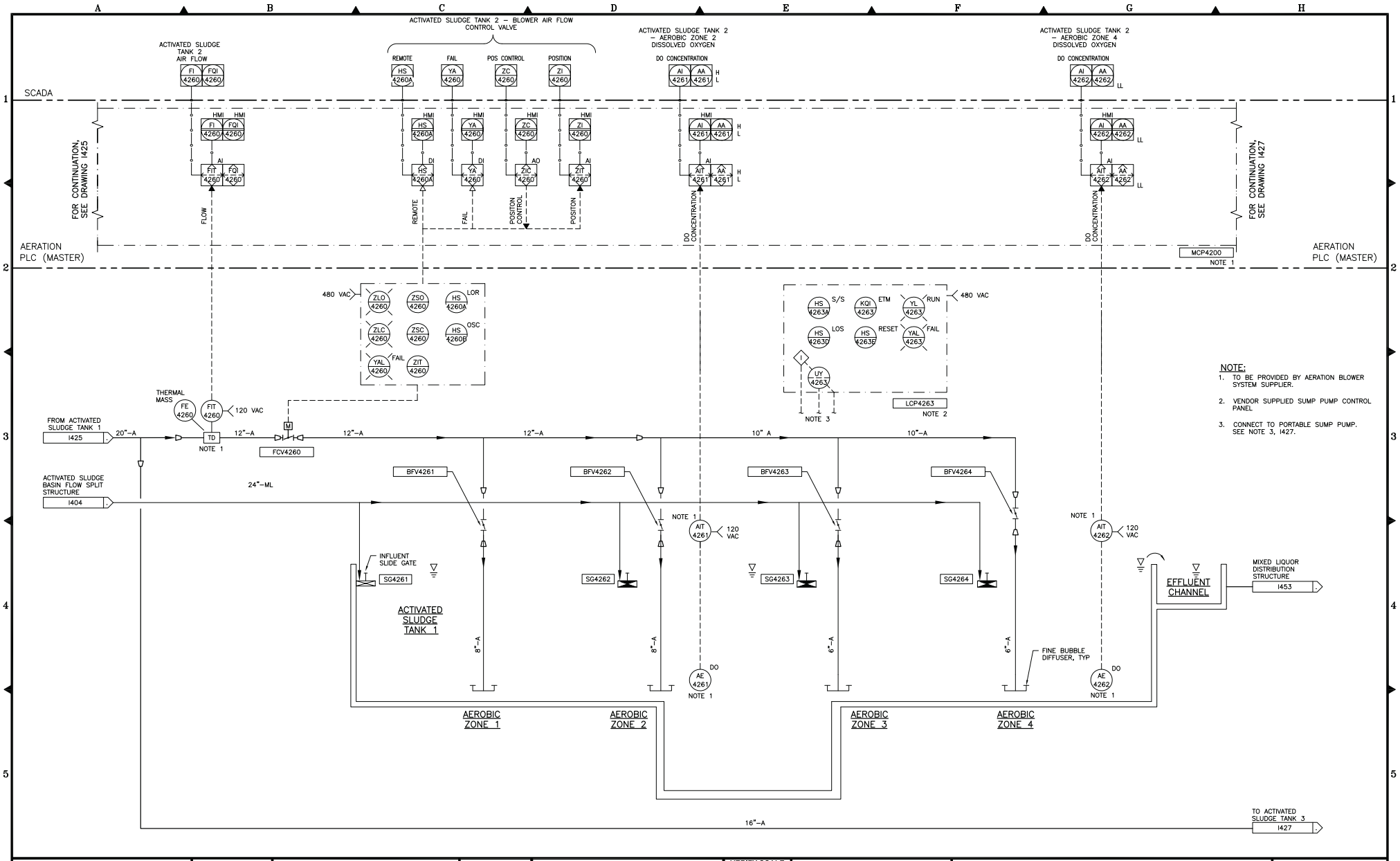

HDR Engineering, Inc. 3230 El Camino Real Suite 200 Irvine, Ca. 92602-1377	DESIGNED RG DRAWN RJG CHECKED RG	SUBMITTED ____ DATE ____ APPROVED ____ DATE ____	FILE 001–426.dwg DATE –	GOLETA SANITARY DISTRICT APPROVED ____ DATE ____ GENERAL MANAGER / DISTRICT ENGINEER RCE No. 18109	VERIFY SCALE BAR IS ONE INCH ON ORIGINAL DRAWING. IF NOT ONE INCH ON THIS SHEET, ADJUST SCALE ACCORDINGLY.	WASTEWATER TREATMENT PLANT UPGRADING	ACTIVATED SLUDGE TANK 2	DRAWING NUMBER I426 SHEET 312 OF 343

C:\PwWorking\SAC\dms95123_001–426.dwg 11/17/10_18:14

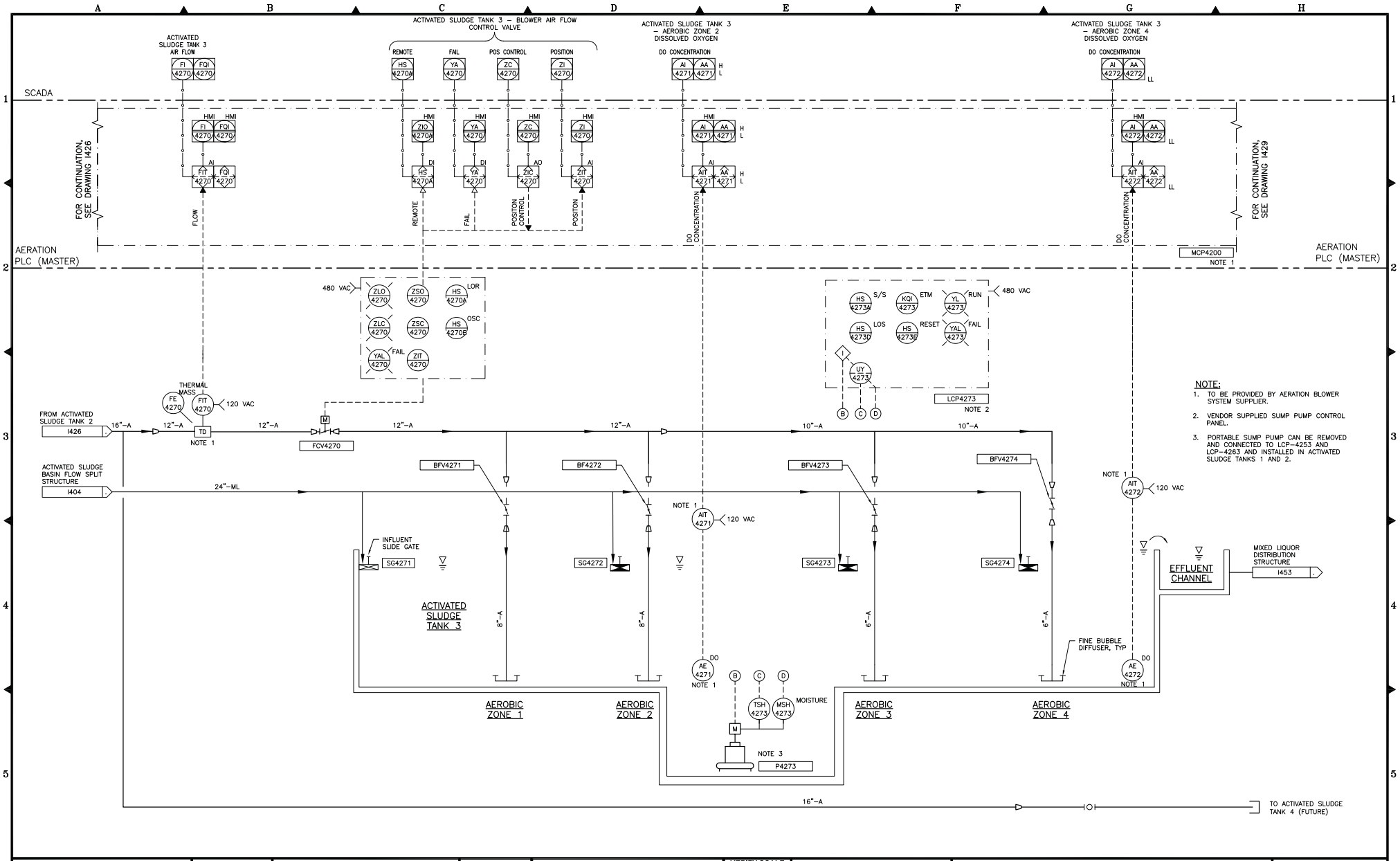

HDR Engineering, Inc.
3230 El Camino Real
Suite 200
Irvine, Ca. 92602-1377

DESIGNED RG
DRAWN RJG
CHECKED RG

SUBMITTED _____ DATE _____
APPROVED _____ DATE _____

FILE 001–427.dwg
DATE –

GOLETA SANITARY DISTRICT
APPROVED _____ DATE _____
GENERAL MANAGER / DISTRICT ENGINEER RCE No. 18109

VERIFY SCALE
BAR IS ONE INCH ON ORIGINAL DRAWING.
IF NOT ONE INCH ON THIS SHEET, ADJUST SCALE ACCORDINGLY.

WASTEWATER TREATMENT PLANT UPGRADING

ACTIVATED SLUDGE TANK 3

DRAWING NUMBER I427
SHEET 313 OF 343

C:\PwWorking\SAC\dms95123\ 001–427.dwg 11/17/10 18:14

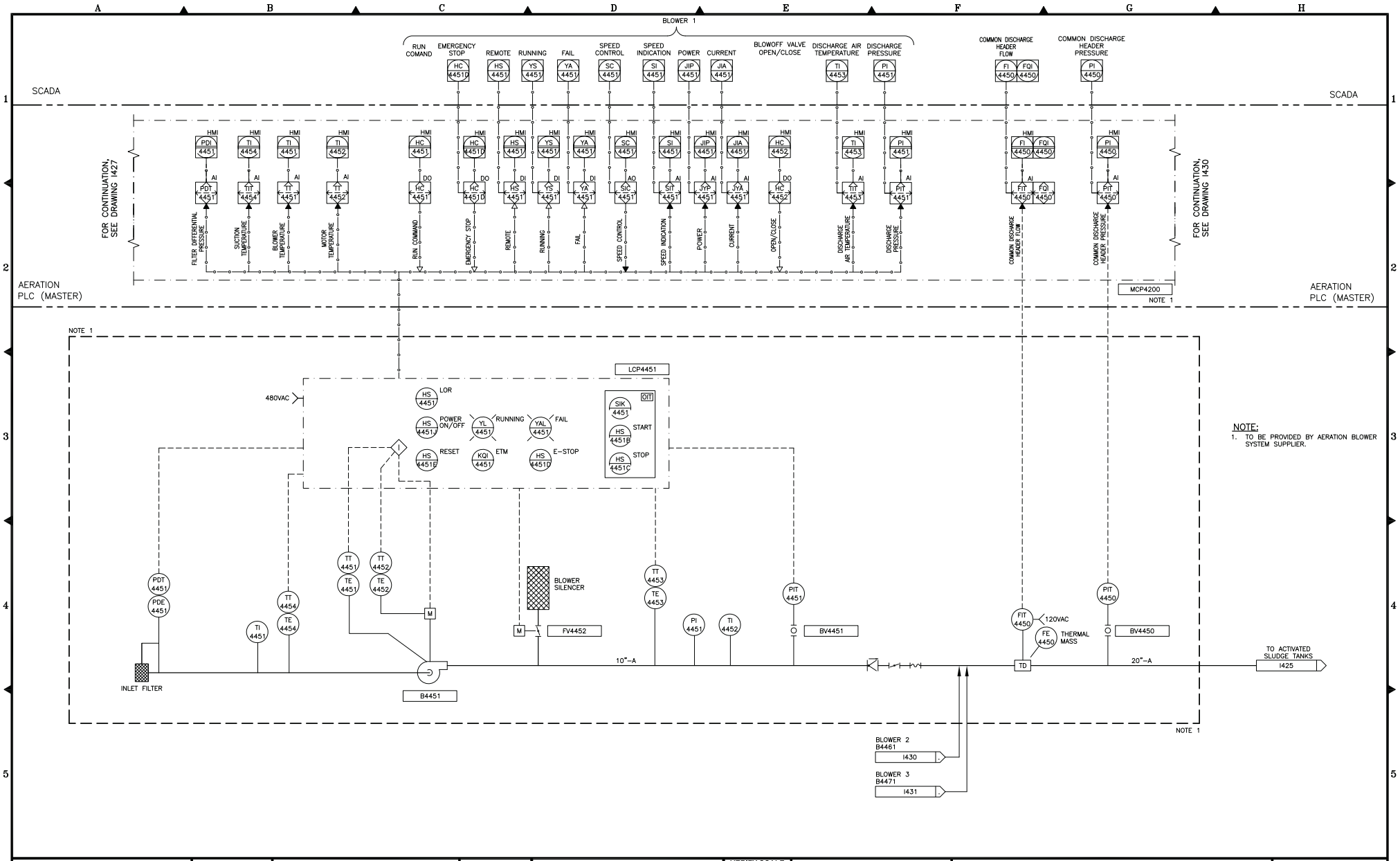

HDR Engineering, Inc. 3230 El Camino Real Suite 200 Irvine, Ca. 92602-1377	DESIGNED RG DRAWN EGS CHECKED RG	SUBMITTED ____ DATE ____ APPROVED ____ DATE ____	FILE 001-429.dwg DATE –	GOLETA SANITARY DISTRICT APPROVED ____ DATE ____ GENERAL MANAGER / DISTRICT ENGINEER RCE No. 18109	VERIFY SCALE BAR IS ONE INCH ON ORIGINAL DRAWING. IF NOT ONE INCH ON THIS SHEET, ADJUST SCALE ACCORDINGLY.	WASTEWATER TREATMENT PLANT UPGRADING	ACTIVATED SLUDGE TANK BLOWER 1	DRAWING NUMBER I429 SHEET 314 OF 343

C:\PwWorking\SAC\dms95123_001-429.dwg 11/17/10 18:14

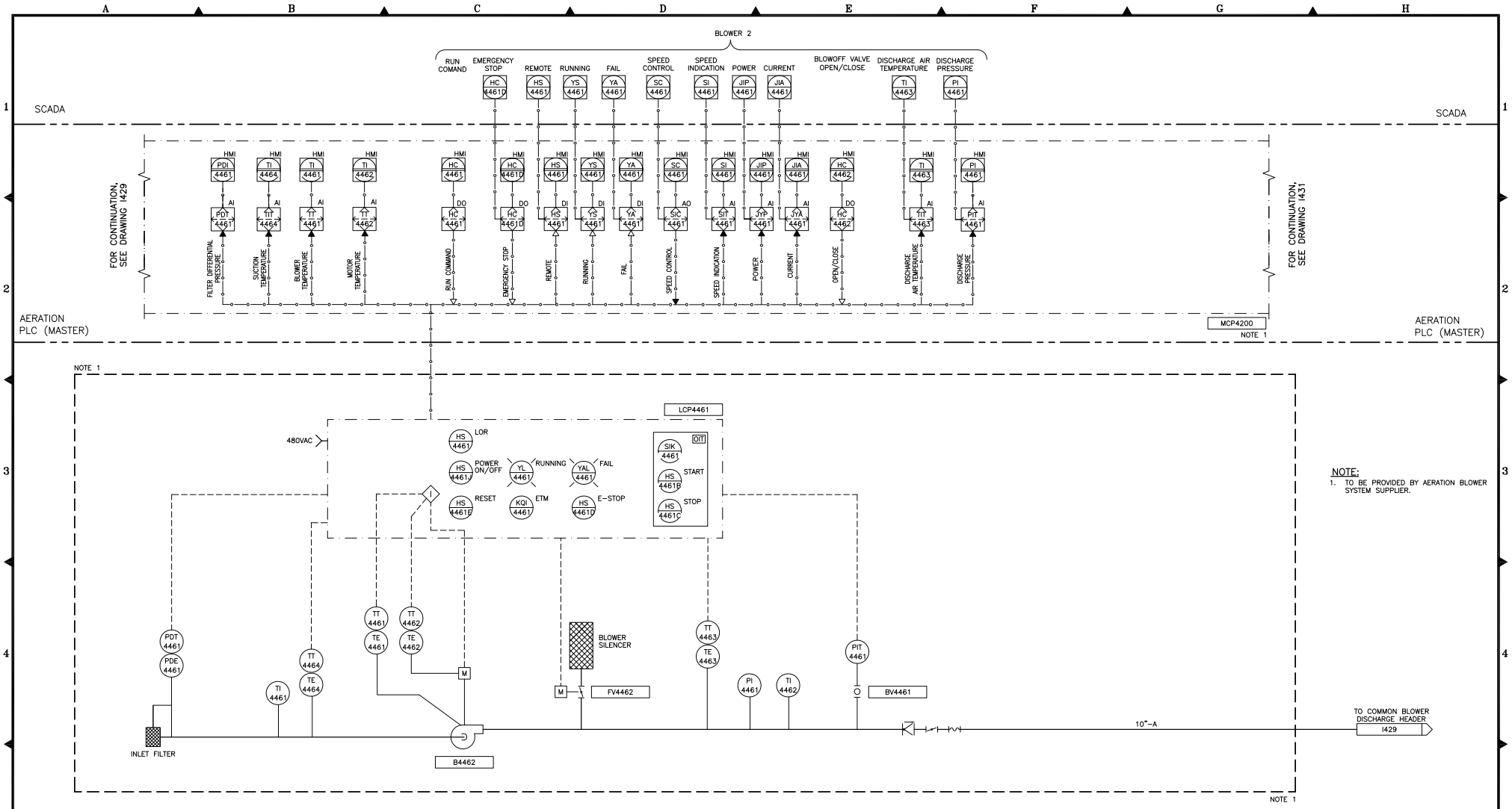

HDR Engineering, Inc. 3230 El Camino Real Suite 200 Irvine, Ca. 92602-1377	DESIGNED RG DRAWN EGS CHECKED RG	SUBMITTED ____ DATE ____ APPROVED ____ DATE ____	FILE 001-430.dwg DATE –	GOLETA SANITARY DISTRICT APPROVED ____ DATE ____ GENERAL MANAGER / DISTRICT ENGINEER RCE No. 18109	VERIFY SCALE BAR IS ONE INCH ON ORIGINAL DRAWING. IF NOT ONE INCH ON THIS SHEET, ADJUST SCALE ACCORDINGLY.	WASTEWATER TREATMENT PLANT UPGRADING	ACTIVATED SLUDGE TANK BLOWER 2	DRAWING NUMBER I430 SHEET 315 OF 343

C:\PwWorking\SAC\dms95123_001-430.dwg 11/17/10 18:14

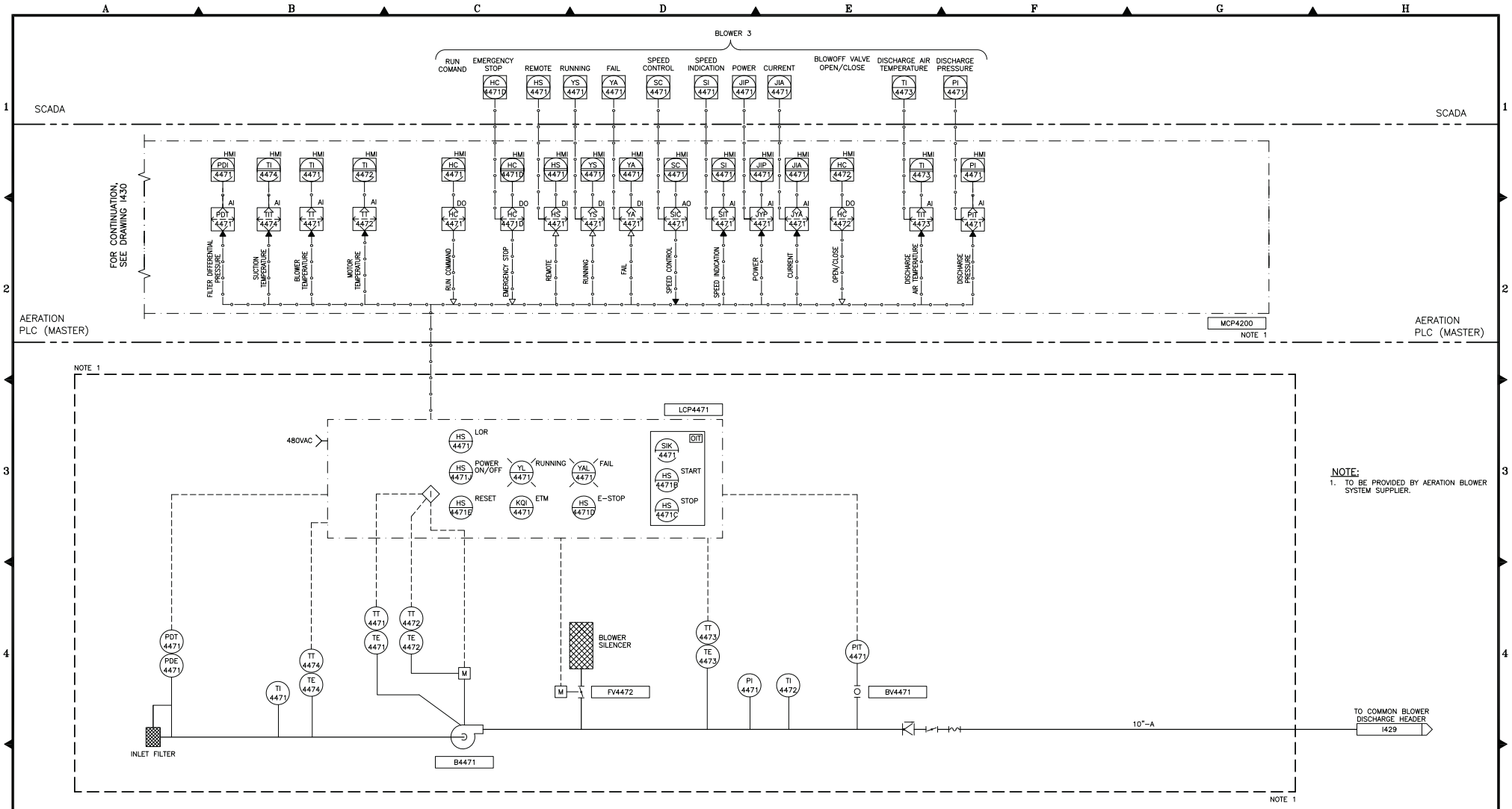

NOTE:
1. TO BE PROVIDED BY AERATION BLOWER SYSTEM SUPPLIER.

HDR Engineering, Inc. 3230 El Camino Real Suite 200 Irvine, Ca. 92602-1377	DESIGNED RG DRAWN EGS CHECKED RG	SUBMITTED DATE APPROVED DATE	FILE 001-431.dwg DATE –	GOLETA SANITARY DISTRICT APPROVED DATE GENERAL MANAGER / DISTRICT ENGINEER RCE No. 18109	VERIFY SCALE BAR IS ONE INCH ON ORIGINAL DRAWING. IF NOT ONE INCH ON THIS SHEET, ADJUST SCALE ACCORDINGLY.	WASTEWATER TREATMENT PLANT UPGRADING	ACTIVATED SLUDGE TANK BLOWER 3

DRAWING NUMBER I431
SHEET 316 OF 343

C:\PwWorking\SAC\dms95123\ 001-431.dwg 11/17/10 18:14

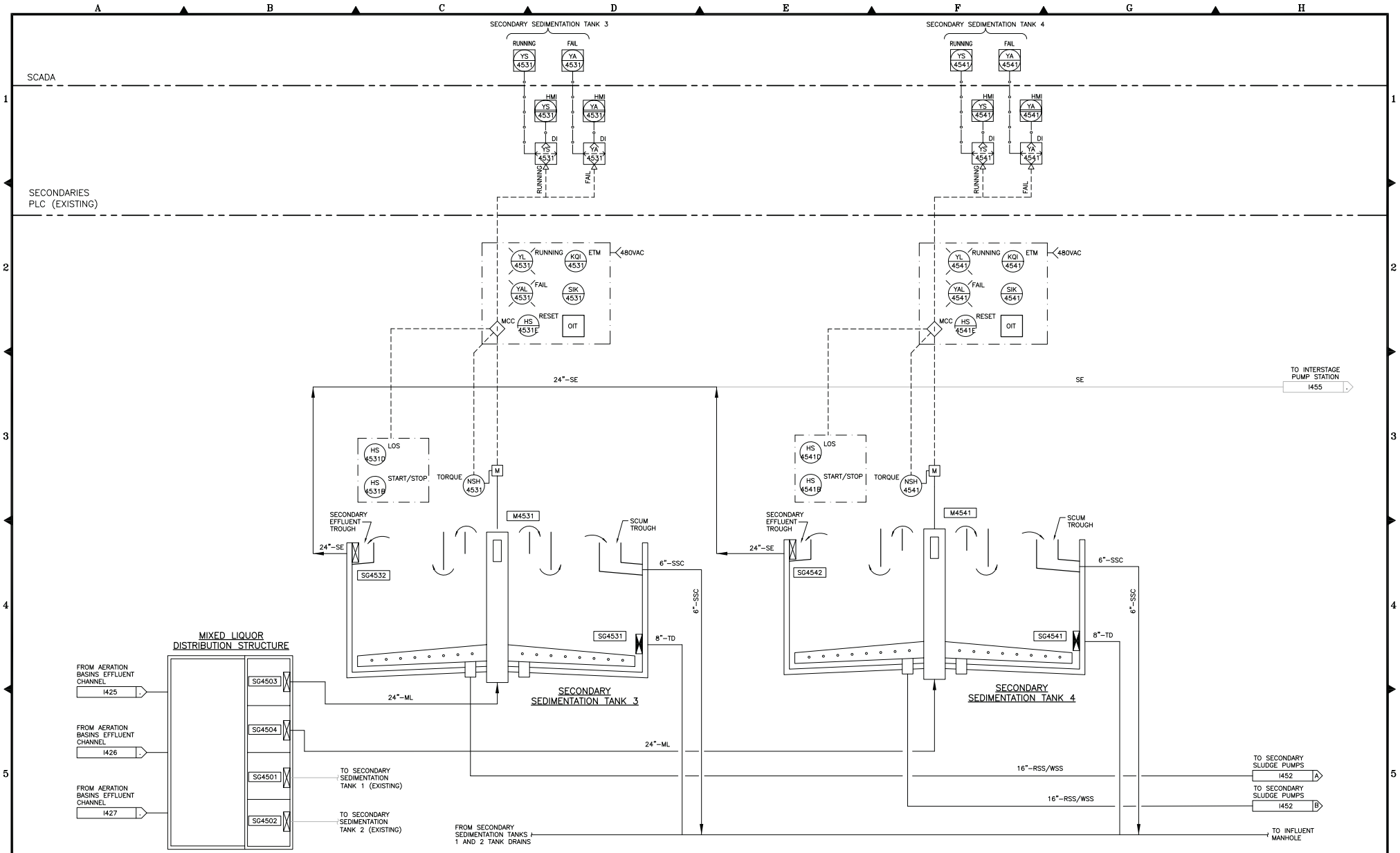

HDR Engineering, Inc.
3230 El Camino Real
Suite 200
Irvine, Ca. 92602-1377

DESIGNED RG
DRAWN RJG
CHECKED RG

SUBMITTED _____ DATE _____
APPROVED _____ DATE _____

FILE 001-453.dwg
DATE –

GOLETA SANITARY DISTRICT
APPROVED _____ DATE _____
GENERAL MANAGER / DISTRICT ENGINEER RCE No. 18109

VERIFY SCALE
BAR IS ONE INCH ON ORIGINAL DRAWING.
IF NOT ONE INCH ON THIS SHEET, ADJUST SCALE ACCORDINGLY.

WASTEWATER TREATMENT PLANT UPGRADING

SECONDARY SEDIMENTATION TANKS 3 & 4

DRAWING NUMBER **I453**
SHEET 319 OF 343

C:\PwWorking\SAC\dms95123\ 001-453.dwg 11/17/10 18:14

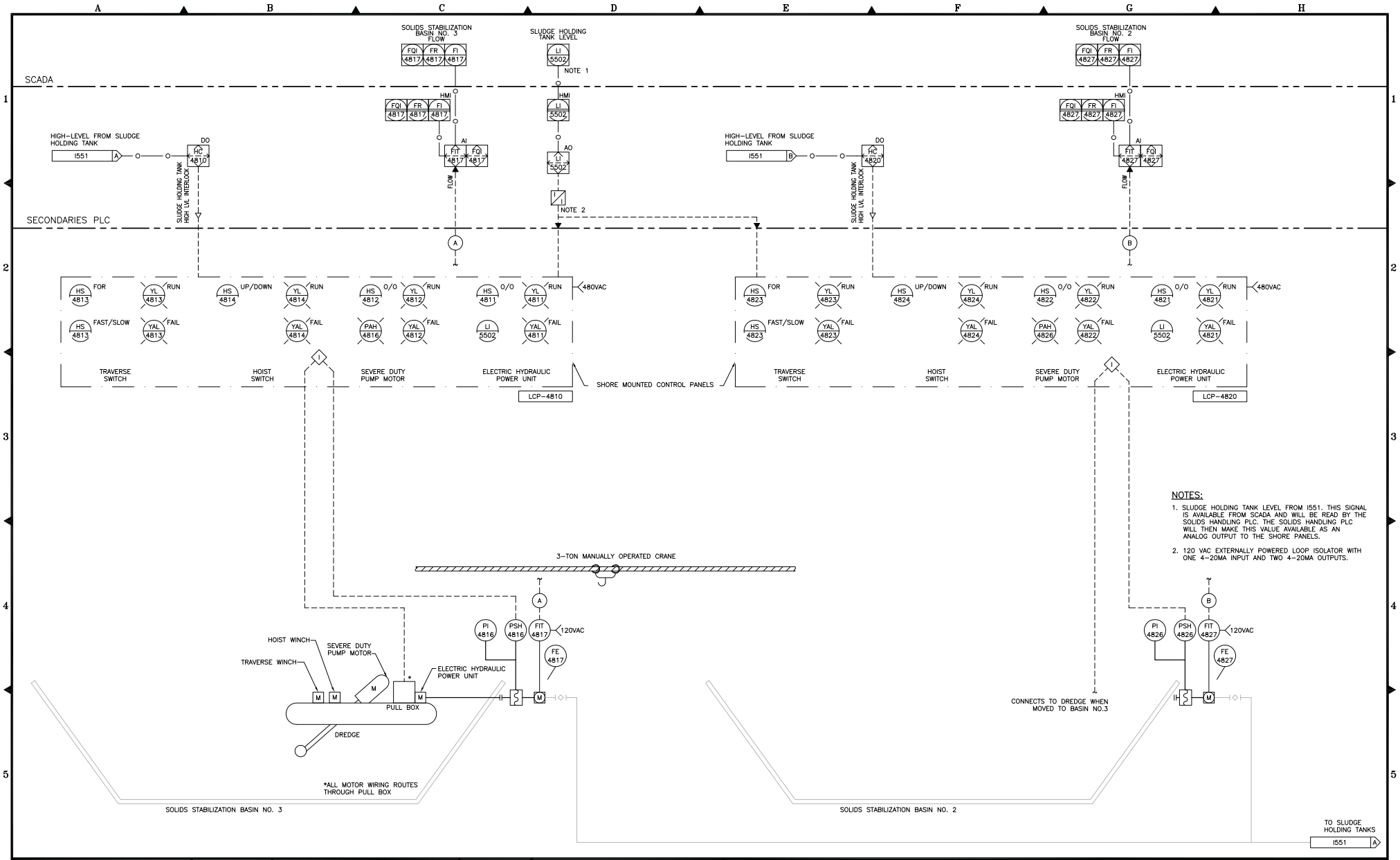

NOTES:

1. SLUDGE HOLDING TANK LEVEL FROM I551. THIS SIGNAL IS AVAILABLE FROM SCADA AND WILL BE READ BY THE SOLIDS HANDLING PLC. THE SOLIDS HANDLING PLC WILL THEN MAKE THIS VALUE AVAILABLE AS AN ANALOG OUTPUT TO THE SHORE PANELS.
2. 120 VAC EXTERNALLY POWERED LOOP ISOLATOR WITH ONE 4-20MA INPUT AND TWO 4-20MA OUTPUTS.

HDR Engineering, Inc. 3230 El Camino Real Suite 200 Irvine, Ca. 92602-1377	DESIGNED RG DRAWN EGS CHECKED RG	SUBMITTED ____ DATE ____ APPROVED ____ DATE ____	FILE 001-480.dwg DATE –	GOLETA SANITARY DISTRICT APPROVED ____ DATE ____ GENERAL MANAGER / DISTRICT ENGINEER RCE No. 18109	VERIFY SCALE BAR IS ONE INCH ON ORIGINAL DRAWING. IF NOT ONE INCH ON THIS SHEET, ADJUST SCALE ACCORDINGLY.	WASTEWATER TREATMENT PLANT UPGRADING	DREDGE	DRAWING NUMBER I480 SHEET 323 OF 343

C:\PwWorking\SAC\dms95123_001-480.dwg 11/17/10 18:14

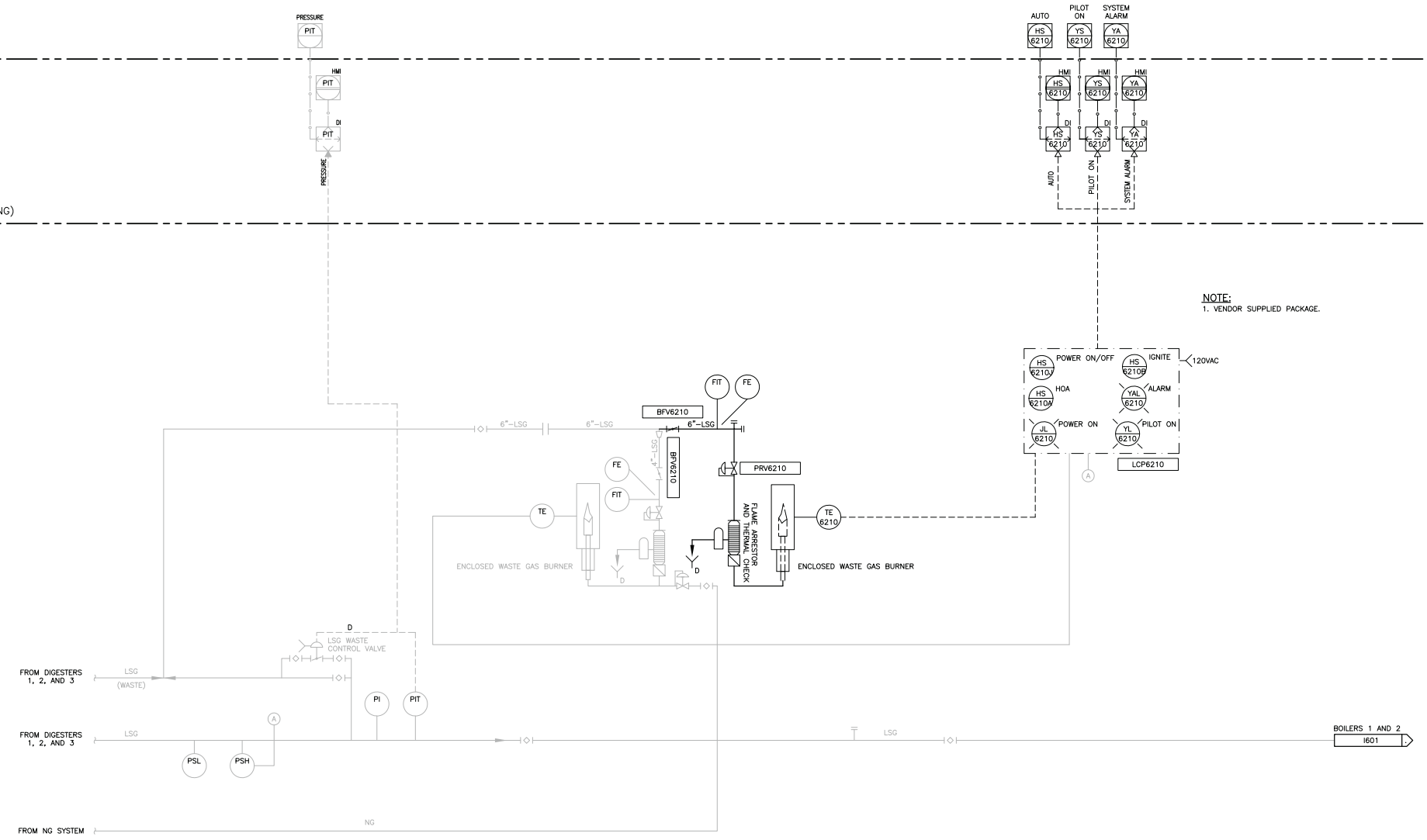

HDR Engineering, Inc. 3230 El Camino Real Suite 200 Irvine, Ca. 92602-1377	DESIGNED RG DRAWN EGS CHECKED RG	SUBMITTED _____ DATE _____ APPROVED _____ DATE _____	FILE 001-601.dwg DATE –	GOLETA SANITARY DISTRICT APPROVED _____ DATE _____ GENERAL MANAGER / DISTRICT ENGINEER RCE No. 18109	VERIFY SCALE BAR IS ONE INCH ON ORIGINAL DRAWING. IF NOT ONE INCH ON THIS SHEET, ADJUST SCALE ACCORDINGLY.	WASTEWATER TREATMENT PLANT UPGRADING	WASTE GAS BURNER	DRAWING NUMBER I602 SHEET 330 OF 343

C:\PwWorking\SAC\dms95123_001-602.dwg 11/17/10 18:14

Santa Barbara County
Air Pollution Control District

Authority to Construct 13378

EQUIPMENT OWNER:

Goleta Sanitary District 340500

EQUIPMENT OPERATOR:

Goleta Sanitary District

EQUIPMENT LOCATION:

One William Moffett Place, Goleta

STATIONARY SOURCE/FACILITY:

Goleta Sanitary District WWTP SSID: 01528 FID: 01528

AUTHORIZED MODIFICATION:

This project consists of upgrading an existing wastewater treatment plant. The plant currently subjects all incoming wastewater to primary treatment and about 40 percent of the flow to secondary treatment. The remaining 60 percent of the flow from primary treatment is then re-mixed with the secondary treatment flow and all of the treated flow is discharged to the ocean. This project will upgrade the plant so that all flow entering the plant is subjected to secondary treatment. The total capacity of the plant will remain unchanged at 9 million gallons per day (MGD) dry weather flow.

The majority of changes to the facility are modifications to aerobic wastewater treatment equipment, which is exempt from permit per Rule 202.L.11. The permitted equipment that will be affected by this project is as follows:

- The two existing emergency standby diesel-fired IC engines will be removed and replaced with new Tier 2 emergency standby DICEs.
- A new low NO_x flare with a destruction removal efficiency of at least 99% will be installed.
- The existing flare will be retained as a backup to the new flare.
- The existing dredge powered by a DICE will be removed and replaced with an electrically powered dredge.

- The existing headworks carbon adsorption odor control system will be removed and replaced with a two stage odor control system consisting of a biofilter first stage and pelletized carbon second stage.

The existing anaerobic digesters and digester gas-fired boilers will not be affected by this project.

EQUIPMENT DESCRIPTION:

The equipment subject to this permit is listed in the table at the end of this permit.

PROJECT/PROCESS DESCRIPTION:

See the permit file and the description of the authorized modification for a complete description of the process at this facility.

CONDITIONS:

1. **Emission Limitations.**
   a. The mass emissions from the equipment permitted herein shall not exceed the values listed in Table 1-3. Compliance shall be based on the operational, monitoring, recordkeeping and reporting conditions of this permit.

   b. Emissions from the new flare (device ID 113016) shall not exceed any of the following:

NO_x	CO	
0.06	0.30	lb/MMBtu
0.29	1.43	lb/hr

   Compliance with this limit shall be based on the source testing provisions of this permit.

2. **Operational Restrictions.** The equipment permitted herein is subject to the following operational restrictions:

   a. The new digester gas flare (Device ID 113016) is subject to the operational restrictions listed below.

      i. The volume of digester gas burned in the flare (total monthly amount ÷ number of days per month of gas usage) shall not exceed 187,200 scf/day.

      ii. The flare shall reduce the total hydrocarbon content of the digester gas by at least 99 percent by weight.

      iii. The concentration of sulfur compounds (calculated as H_2S at standard conditions, 60° F & 14.7 psia) in the gaseous fuel burned in the flare (Device ID # 113016) shall not exceed 15.0 grains per 100 cubic feet (239 ppmvd).

iv. Only gaseous fuel shall be burned in the flare.

v. The flare shall not operate for a period or periods aggregating more than three minutes in any one hour with visible emissions of an opacity level as dark or darker in shade than No. 1 on the Ringelmann Chart published by the U.S. Bureau of Mines.

vi. The flare shall operate with an automatic ignition system.

vii. The presence of the flame in the pilot shall be continuously monitored using a thermocouple.

viii. A flame shall be present at all times combustible gases are vented through the flare.

b. The existing flare (Device ID 006239) is subject to the operational restrictions listed below.

i. The volume of digester gas burned in the flare shall not exceed 187,200 scf/day (calculated as total monthly amount ÷ number of days per month of gas usage) and 1,560,000 scf/year.

ii. The existing flare (Device ID 006239) shall only be operated when the new flare (Device ID 113016) is not operating due to maintenance or breakdown conditions.

iii. The concentration of sulfur compounds (calculated as H_2S at standard conditions, 60° F & 14.7 psia) in the gaseous fuel burned in the flare shall not exceed 15.0 grains per 100 cubic feet (239 ppmvd).

iv. Only gaseous fuel shall be burned in the flare.

v. The flare shall not operate for a period or periods aggregating more than three minutes in any one hour with visible emissions of an opacity level as dark or darker in shade than No. 1 on the Ringelmann Chart published by the U.S. Bureau of Mines.

vi. The flare shall operate with an automatic ignition system.

vii. A flame shall be present at all times combustible gases are vented through the flare

c. Incineration of sludge is prohibited.

d. Except for breakdown conditions defined in APCD Rule 505, venting of digester gas is prohibited.

e. Each flare and each boiler shall be equipped with a properly functioning digester gas flow meter, installed upstream of all combustion units.

f. The odor control systems (Device IDs # 104281 and 113019) shall be operated in accordance with manufacturer's recommendations.

g. Diesel-Fired Emergency/Standby Generator Operational Restrictions: The diesel E/S generators at this facility (Device IDs# 113017 & 113018) are subject to the operational restrictions listed below. Emergency use operations, as defined in the ATCM[1], have no operational hours limitations.

i. Maintenance & Testing Use Limit: The stationary emergency standby diesel-fueled compression ignition (CI) engines subject to this permit, except for in-use firewater pump engines, shall limit maintenance and testing[2] operations to no more than the hours listed in the attached permit equipment list.

ii. Impending Rotating Outage Use: The stationary emergency standby diesel-fueled CI engines subject to this permit may be operated in response to the notification of an impending rotating outage if all the conditions cited in the ATCM are met, as applicable.

iii. Fuel and Fuel Additive Requirements: The permittee may only add fuel and/or fuel additives that comply with the ATCM to the engine, or to any fuel tank directly attached to the engine, as applicable.

iv. Initial Startup Hours: Initial startup hours shall not exceed 5 hours.

3. **Monitoring.** The equipment permitted herein is subject to the following monitoring requirements:

a. Measurements of the sulfur concentration (as H_2S) in the gaseous fuel burned in the boilers (Device IDs # 006237 & 006238) and flares (Device IDs # 113016 & 006239) of this permit shall be made daily in accordance with current ASTM-D1072 or an APCD-approved equivalent method.

b. Monthly volume of digester gas combusted in the flares and boilers shall be monitored. Each flowmeter for quantifying the total volume (scf) of produced digester gas shall be checked weekly and maintained to ensure proper operation.

c. On an annual basis, the heating value (Btu/scf) of the digester gas fuel shall be measured by ASTM D-3588 method, or by an APCD-approved equivalent method.

---

[1] As used in the permit, "ATCM" means Section 93115, Title 17, California Code of Regulations. Airborne Toxic Control Measure for Stationary Compression Ignition (CI) Engines

[2] "maintenance and testing" is defined in of the ATCM and may also be found on the APCD webpage at http://www.sbcapcd.org/eng/atcm/dice/ES_MT_DICE_Definitions.pdf

d. The permittee shall review carbon canister usage monthly.

e. Non-Resettable Hour Meter: Each stationary emergency standby diesel-fueled CI engine subject to this permit shall have installed a non-resettable hour meter with a minimum display capability of 9,999 hours, unless the APCD has determined (in writing) that a non-resettable hour meter with a different minimum display capability is appropriate in consideration of the historical use of the engine and the owner or operator's compliance history.

4. **Recordkeeping.** The permittee shall record and maintain the following information. This data shall be maintained for a minimum of three (3) years from the date of each entry and made available to the APCD upon request:

a. Daily volumes (scf/day) of digester gas combusted in the flares and boilers for each month. The daily volumes shall be calculated by dividing the total monthly volumes (scf) for each device by the number of days per month it was used.

b. Average daily concentration of sulfur compounds (ppmv), in the digester gas for each month, measured as H_2S at standard conditions. This value shall be calculated by averaging the measured H_2S concentrations, taken in accordance with Condition 3.a of this permit, over a monthly period.

c. Number of days of each boiler operation (Device IDs # 006237 & 006238).

d. Number of days of each flare operation (Device IDs # 113016 & 006239).

e. For each day the backup flare (Device ID # 006239) is operated, the dates and times the primary flare (Device ID # 113016) was shut down and re-started, the dates and times the backup flare (Device ID # 006239) was started up and shut down, and a description and records of the maintenance conducted on the primary flare (Device ID # 113016).

f. Measurements of the total sulfur content (ppmv) in gaseous fuel.

g. The heating value of the digester gas fuel as measured in accordance with Condition 3.c.

h. Diesel-Fired E/S Generators: The permittee shall record and maintain the information listed below. Log entries shall be retained for a minimum of 36 months from the date of entry. Log entries made within 24 months of the most recent entry shall be retained on-site, either at a central location or at the engine's location, and made immediately available to the APCD staff upon request. Log entries made from 25 to 36 months from most recent entry shall be made available to APCD staff within five working days from request. APCD Form ENF-92 (*Diesel-Fired Emergency Standby Engine Recordkeeping Form*) can be used for this requirement.

i emergency use hours of operation.

ii. maintenance and testing hours of operation.

iii. initial start-up hours {if specifically allowed for under this permit}.

iv. hours of operation for all uses other than those specified in items (a) – (d) above along with a description of what those hours were for.

v. The owner or operator shall document fuel use through the retention of fuel purchase records that demonstrate that the only fuel purchased and added to an emergency standby engine, or to any fuel tank directly attached to an emergency standby engine, meets the requirements of the ATCM.

5. **Reporting.** By March 1st of each year, a written report documenting compliance with the terms and conditions of this permit for the previous calendar year shall be provided by the permittee to the APCD (Attn: *Annual Report Coordinator*). The report shall contain information necessary to verify compliance with the emission limits and other requirements of this permit. The report shall be in a format approved by the APCD. Compliance with all limitations and restrictions shall be documented in the submittals. All logs and other basic source data not included in the report shall be made available to the APCD upon request. The report shall include all data required by the Recordkeeping condition of this permit summarized on a monthly and yearly basis.

6. **Best Available Control Technology (BACT).** The permittee shall apply emission control technology and plant design measures that represent Best Available Control Technology (BACT) to the operation of the equipment/facilities as described in this permit and the APCD's Permit Evaluation for this permit. Table 2 and the Emissions, Operational, Monitoring, Recordkeeping and Reporting Conditions of this permit define the specific control technology and performance standard emission limits for BACT. The BACT shall be in place, and shall be operational at all times, for the life of the project. BACT related monitoring, recordkeeping and reporting requirements are defined in those specific permit conditions and Table 2.

7. **Health Risk Assessment.** Within 60 days of the date stamped on this permit, the permittee shall submit a plan for APCD approval to quantify actual and potential formaldehyde and other toxic emissions from the primary sedimentation tanks and the primary flow equalization basin. Within 120 days of the date stamped on this permit, the permittee shall implement the APCD-approved plan and submit the results of the analysis (including all laboratory data) to the APCD for review. If the APCD determines, based on the results of this analysis, that the health risk from the facility exceeds APCD significance levels, the permittee shall submit an ATC application to limit or modify operations to mitigate the risk.

8. **Source Testing.** The following source testing provisions shall apply:

   a. An initial source test of the new flare (Device ID 113016) shall be required for ROC mass emissions, THC destruction efficiency, and NO_x and CO mass emission rates and emission

factors per the methods in Table 3 attached and as specified in the SCDP Permit Condition below. Alternate test methods may be used if approved by the APCD. The permittee shall conduct source testing of NO_x and CO mass emissions and emission factors on an annual schedule using the initial source test date as the anniversary date. More frequent source testing may be required if the equipment does not comply with permitted limitations or if other compliance problems, as determined by the APCD, occur.

b. The permittee shall submit a written source test plan to the APCD for approval at least thirty (30) days prior to initiation of each source test. The source test plan shall be prepared consistent with the APCD's *Source Test Procedures Manual* (revised May 1990 and any subsequent revisions). The permittee shall obtain written APCD approval of the source test plan prior to commencement of source testing. The APCD shall be notified at least ten (10) calendar days prior to the start of source testing activity to arrange for a mutually agreeable source test date when APCD personnel may observe the test.

c. Source test results shall be submitted to the APCD within forty-five (45) calendar days following the date of source test completion and shall be consistent with the requirements approved within the source test plan. Source test results shall document the permittee's compliance status with BACT requirements, mass emission rates, applicable permit conditions, and district rules. All APCD costs associated with the review and approval of all plans and reports and the witnessing of tests shall be paid by the permittee as provided for by APCD Rule 210.

d. A source test for an item of equipment shall be performed on the scheduled day of testing (the test day mutually agreed to) unless circumstances beyond the control of the operator prevent completion of the test on the scheduled day. Such circumstances include mechanical malfunction of the equipment to be tested, malfunction of the source test equipment, delays in source test contractor arrival and/or set-up, or unsafe conditions on site. Except in cases of an emergency, the operator shall seek and obtain APCD approval before deferring or discontinuing a scheduled test, or performing maintenance on the equipment item on the scheduled test day. If the test cannot be completed on the scheduled day, then the test shall be rescheduled for another time with prior authorization by the APCD. Once the sample probe has been inserted into the exhaust stream of the equipment unit to be tested (or extraction of the sample has begun), the test shall proceed in accordance with the approved source test plan. In no case shall a test run be aborted except in the case of an emergency or unless approval is first obtained from the APCD. Failing to perform the source test of an equipment item on the scheduled test day without a valid reason and without APCD's authorization shall constitute a violation of this permit. If a test is postponed due to an emergency, written documentation of the emergency event shall be submitted to the APCD by the close of the business day following the scheduled test day.

The timelines in (a), (b), and (c) may be extended for good cause provided a written request is submitted to the APCD at least three (3) days in advance of the deadline, and approval for the extension is granted by the APCD.

9. **Source Compliance Demonstration Period (SCDP).** The equipment covered by this permit shall be allowed to temporarily operate during a 150 calendar-day time period (subject to the requirements of this condition). This time period is termed the "Source Compliance Demonstration Period" (SCDP). The first introduction of fuel to the new flare defines the start of the SCDP. During the SCDP, the permit holder is not considered in violation of this permit if the emission limits stated in this permit are exceeded due to testing requirements and/or process debugging operations. However, enforcement action may be taken against operations that result in a violation of any emission limit stipulated by a prohibitory rule in the APCD's Rules and Regulations.

Prior to the start of the SCDP, the permittee shall submit a source test plan for APCD review and approval to address the testing requirements specified in permit condition 8 above.

In addition, the permittee shall take the following actions during the SCDP.

a. Provide written notification to the APCD of the date fuel is introduced to the new flare. (Attn: *Compliance Supervisor - South County*)

b. Contact the APCD within fourteen (14) calendar days of the initiation of the SCDP to arrange for an inspection, by APCD personnel, of the equipment authorized for installation under this permit. This inspection shall be conducted to verify that the equipment and its operation are in compliance with APCD rules and permit conditions.

c. Initiate all required monitoring and recordkeeping under this permit.

d. Complete an initial source test of THC destruction efficiency and NO_x, CO, and ROC mass emissions within sixty (60) days of SCDP initiation. The source test must be in accordance with APCD's *Source Test Procedures Manual* (revised May 1990 and any subsequent revisions) and the APCD-approved *Source Test Plan*.

e. Submit the Source Test Report to the APCD within one hundred five (105) days of SCDP initiation.

f. Submit a Permit to Operate (PTO) application and the appropriate filing fee not more than 120 calendar days after the SCDP begins pursuant to APCD Rule 201.E.2. Upon the APCD's determination that the permit application is "complete", the permittee may continue temporary operations under the SCDP until such time the PTO is issued final or one year from the date of PTO application completeness, whichever occurs earlier.

If items (a) through (f) of this condition are not satisfied within one hundred fifty (150) calendar days of the initiation of the SCDP, the SCDP shall terminate and the operation of any equipment covered by this permit will be considered a violation of APCD rules and regulations. If the APCD has determined that the application for the Permit to Operate is complete, the SCDP shall remain valid until the APCD issues (or denies) the Permit to Operate. The SCDP may be extended at either the APCD's discretion or at the request of the permittee provided

such a request is submitted, in writing (Attn: *ECD Manager*) to the APCD two weeks prior to the end of the SCDP and sufficient justification is provided.

10. **Temporary Emergency/Standby Engine Replacements - DICE ATCM.** Any reciprocating internal combustion emergency standby engine subject to this permit and the stationary diesel ATCM may be replaced temporarily only if the requirements (a – f) listed herein are satisfied.

    a. The permitted engine is in need of routine repair or maintenance.

    b. The permitted engine that is undergoing routine repair or maintenance is returned to its original service within 180 days of installation of the temporary engine.

    c. The temporary replacement engine has the same or lower manufacturer rated horsepower and same or lower potential to emit of each pollutant as the permitted engine that is being temporarily replaced. At the written request of the permittee, the APCD may approve a replacement engine with a larger rated horsepower than the permitted engine if the proposed temporary engine has manufacturer guaranteed emissions (for a brand new engine) or source test data (for a previously used engine) less than or equal to the permitted engine.

    d. The temporary replacement engine shall comply with all rules and permit requirements that apply to the permitted engine that is undergoing routine repair or maintenance.

    e. For each permitted engine to be temporarily replaced, the permittee shall submit a completed *Temporary IC Engine Replacement Notification* form (Form ENF-94) within 14 days of the temporary engine being installed. This form shall be sent electronically to: *temp-engine@sbcapcd.org*.

    f. Within 14 days upon return of the original permitted engine to service, the permittee shall submit a completed *Temporary IC Engine Replacement Report* form (Form ENF-95). This form shall be sent electronically to: *temp-engine@sbcapcd.org*.

    Any engine in temporary replacement service shall be immediately shut down if the APCD determines that the requirements of this condition have not been met. This condition does not apply to engines that have experienced a cracked block (unless under manufacturer's warranty), to engines for which replacement parts are no longer available, or new engine replacements {including "reconstructed" engines as defined in Section (d)(44) of the ATCM}. Such engines are subject to the provisions of New Source Review and the new engine requirements of the ATCM.

11. **Permanent Emergency/Standby Engine Replacements.** The permittee may install a new engine in place of a permitted E/S engine, fire water pump engine or engine used for an essential public service that breaks down and can not be repaired, without first obtaining an ATC permit only if the requirements (a – e) listed herein are satisfied.

a. The permitted stationary diesel IC engine is an E/S engine, a fire water pump engine or an engine used for an essential public service (as defined by the APCD).

b. The engine breaks down, cannot be repaired and needs to be replaced by a new engine.

c. The facility provides "good cause" (in writing) for the immediate need to install a permanent replacement engine prior to the time period before an ATC permit can be obtained for a new engine. The new engine must comply with the requirements of the ATCM for new engines. If a new engine is not immediately available, a temporary engine may be used while the new replacement engine is being procured. During this time period, the temporary replacement engine must meet the same guidelines and procedures as defined in the permit condition above (*Temporary Engine Replacements - DICE ATCM*).

d. An Authority to Construct application for the new permanent engine is submitted to the APCD within 15 days of the existing engine being replaced and the APCD permit for the new engine is obtained no later than 180 days from the date of engine replacement (these timelines include the use of a temporary engine).

e. For each permitted engine to be permanently replaced pursuant to the condition, the permittee shall submit a completed *Permanent IC Engine Replacement Notification* form (Form ENF-96) within 14 days of either the permanent or temporary engine being installed. This form shall be sent electronically to: *temp-engine@sbcapcd.org*.

Any engine installed (either temporally or permanently) pursuant to this permit condition shall be immediately shut down if the APCD determines that the requirements of this condition have not been met.

12. **Notification of Non-Compliance.** Owners or operators who have determined that they are operating their stationary diesel-fueled engines in violation of the requirements specified in the ATCM shall notify the APCD immediately upon detection of the violation and shall be subject to APCD enforcement action.

13. **Notification of Loss of Exemption.** Owners or operators of in-use stationary diesel-fueled CI engines, who are subject to an exemption specified in the ATCM from all or part of the requirements of the ATCM, shall notify the APCD immediately after they become aware that the exemption no longer applies and shall demonstrate compliance within 180 days after notifying the APCD.

14. **Enrollment in a DRP/ISC.** Any stationary diesel CI engine rated over 50 bhp that enrolls for the first time in a Demand Response Program/Interruptible Service Contract (as defined in the ATCM) shall first obtain an APCD Authority to Construct permit to ensure compliance with the emission control requirements and hour limitations governing ISC engines.

15. **Consistency with Analysis.** Operation under this permit shall be conducted consistent with all data, specifications and assumptions included with the application and supplements thereof (as

documented in the APCD's project file) and the APCD's analyses under which this permit is issued.

16. **Equipment Maintenance.** All equipment permitted herein shall be properly maintained and kept in good working condition in accordance with the equipment manufacturer specifications at all times.

17. **Compliance**. Nothing contained within this permit shall be construed as allowing the violation of any local, state or federal rules, regulations, air quality standards or increments.

18. **Severability**. In the event that any condition herein is determined to be invalid, all other conditions shall remain in force.

19. **Conflict Between Permits.** The requirements or limits that are more protective of air quality shall apply if any conflict arises between the requirements and limits of this permit and any other individual permit(s) issued by the APCD.

20. **Equipment Identification.** Identifying tag(s) or name plate(s) shall be displayed on the ICEs to show manufacturer, model number, and serial number. The tag(s) or plate(s) shall be affixed to the equipment in a permanent and conspicuous position.

21. **Emission Factor Revisions.** The APCD may update the emission factors for any calculation based on USEPA AP-42 or APCD emission factors at the next permit modification or permit reevaluation to account for USEPA and/or APCD revisions to the underlying emission factors.

22. **Nuisance**. Except as otherwise provided in Section 41705 of the California H&SC, no person shall discharge from any source whatsoever such quantities of air contaminants or other material which cause injury, detriment, nuisance, or annoyance to any considerable number of persons or to the public, or which endanger the comfort, repose, health, or safety of any such persons or the public, or which cause, or have a natural tendency to cause, injury or damage to business or property.

23. **Complaint Response**. The permittee shall provide to the APCD the name(s), address(es), and telephone number(s) of current representative(s) of the Goleta Sanitary District, who shall be available to respond to public complaints concerning nuisances, including odors, allegedly resulting from the operation of the equipment listed on this permit. The representative(s) shall assist APCD staff, at the APCD’s discretion, in the investigation of any complaints received by the APCD allegedly resulting from situations created by the permittee. Upon request of the APCD, the permittee shall take any reasonable corrective action necessary to remedy the situation believed by the APCD to be responsible for the creation of the nuisance situation.

24. **Condition Acceptance.** Acceptance of this operating permit by the permittee shall be considered as acceptance of all terms, conditions, and limits of this permit.

25. **Grounds for Revocation.** Failure to abide by and faithfully comply with this permit shall constitute grounds for revocation pursuant to California Health & Safety Code Section 42307 *et seq*.

26. **Access to Records and Facilities.** As to any condition that requires for its effective enforcement the inspection of records or facilities by the APCD or its agents, the permittees shall make such records available or provide access to such facilities upon notice from the APCD. Access shall be allowed between 7:30 am - 4:00 pm on regular business days and at other times upon 24 hours notice from the APCD consistent with California Health and Safety Code Section 41510 and Clean Air Act Section 114A.

_____

AIR POLLUTION CONTROL OFFICER

_____

DATE

Attachments:

- Table 1 – Permitted Emission Limits
- Table 2 – Source Test Requirements
- Table 3 – Best Available Control Technology Requirements
- Table 4 – Offsets and Emission Reduction Credit Requirements
- Permit Equipment List(s)
- Permit Evaluation for Authority to Construct 13378

Notes:

- This permit is valid for one year from the date stamped above if unused.

Table 1-1
COMBUSTION EQUIPMENT

No.	Make/Model	APCD Device No.	Device Type	Flare Specifications: Fuel	Rating (MMBtu/hr)	Fuel Flow Rate(scf/hr)	Operating Limitations: On-Line (hr/day)	On-Line (hr/year)	Use (MMBtu) (per day)	Use (MMBtu) (per year)	Fuel Properties: HHV[a] (Btu/scf)	Total Sulfur (ppmv)
1	Varec/ 244E	113016	Flare	Digester Gas	4.758	7,800	24	8,760	114.19	41,680	610	239
2	Varec/ 239-A	6239	Flare	Digester Gas	4.758	7,800	24	200	114.19	952	610	239
3	Cleaver-Brooks	6237	Boiler	Digester Gas	2.09	3,426	24	8,760	50.16	18,308	610	239
4	Cleaver-Brooks	6238	Boiler	Digester Gas	2.09	3,426	24	8,760	50.16	18,308	610	239

	Make/Model	APCD Device No.	Engine Use	hp rating	Use (hr/day)	Use (hr/year)
5		113017	Emergency Backup	1,000	2	50
6		113018	Emergency Backup	1,000	2	50

Table 1-2
EMISSION FACTORS

No.	NOx (lb/MMBtu)	ROC (lb/MMBtu)	CO (lb/MMBtu)	SOx (lb/MMBtu)	PM (lb/MMBtu)	PM10 (lb/MMBtu)
1	0.0600	0.0860	0.3000	0.0662	0.020	0.020
2	0.0680	0.0864	0.3700	0.0662	0.020	0.020
3	0.0980	0.0054	0.0820	0.0662	0.008	0.008
4	0.0980	0.0054	0.0820	0.0662	0.008	0.008
	NOx (g/bhp-hr)	**ROC (g/bhp-hr)**	**CO (g/bhp-hr)**	**SOx (g/bhp-hr)**	**PM (g/bhp-hr)**	**PM10 (g/bhp-hr)**
5	4.5000	0.3000	2.6000	0.0060	0.150	0.150
6	4.5000	0.3000	2.6000	0.0060	0.150	0.150

Table 1-3
EXHAUST GAS EMISSION LIMITS

No.	NOx lb/day	NOx ton/year	ROC lb/day	ROC ton/year	CO lb/day	CO ton/year	SOx lb/day	SOx ton/year	PM lb/day	PM ton/year	PM10 lb/day	PM10 ton/year
1	6.85	1.25	9.82	1.79	34.26	6.25	7.56	1.38	2.28	0.42	2.28	0.42
2	7.77	0.03	9.87	0.04	42.25	0.18	7.56	0.03	2.28	0.01	2.28	0.01
3	4.92	0.90	0.27	0.05	4.11	0.75	3.32	0.61	0.38	0.07	0.38	0.07
4	4.92	0.90	0.27	0.05	4.11	0.75	3.32	0.61	0.38	0.07	0.38	0.07
5	19.84	0.25	1.32	0.02	11.46	0.14	0.03	0.00	0.66	0.01	0.66	0.01
6	19.84	0.25	1.32	0.02	11.46	0.14	0.03	0.00	0.66	0.01	0.66	0.01

Notes:

(a) 610 Btu/scf is a representative heating value, the actual heat value of the gas varies throughout the year.

TABLE 2 – BACT STANDARD AND MONITORING REQUIREMENTS: FLARE AND ENGINES

Digester gas flare with NO_x emissions no more than 0.06 lb/MMBtu and CO emissions no more than 0.30 lb/MMBtu.

Equipment / Parameter	Monitored Units/ Monitoring Methods	Recording Methods
Flare / Pilot Flame detection	Degrees F / Thermocouple	Electronically, continuous

TABLE 3 - SOURCE TEST REQUIREMENTS: FLARE

Emission Points	Pollutants/ Parameters	Test Requirements/Method(s)
Flare Inlet	Flow Rate	flow (scfm) / EPA: M-2
	Total Hydrocarbons	raw concentration (ppmv), mass emission rate (lb/hour) / EPA Method 25A
Flare Outlet	Flow Rate	flow (scfm) / EPA: M-2
	Total Hydrocarbons, Reactive Organic Compounds	raw concentration (ppmv), mass emission rate (lb/hour), emission factor (lb/MMBtu) / EPA Method 25A for total hydrocarbons, EPA Method 18 with GC-FID for methane and ethane
	Nitrogen Oxides, Carbon Monoxide, Oxygen	raw concentration (ppmv), mass emission rate (lb/hour), emission factor (lb/MMBtu) / CARB: M-100

Site Specific Requirements

a. All emission and process parameter testing shall be performed in a manner consistent with SBCAPCD's Source Test Protocol (ver. May 1990 and any updates thereof).

b. Source testing shall be performed at maximum production rates.

c. Reactive organic compound (ROC) as defined in APCD Rule 102.

d. Stack flow rate measurement per USEPA Methods 2 - 4 is required for pound per hour emission rate determination.

e. Alternative test methods may be used, subject to APCD approval.

f. Destruction Removal Efficiency (% DRE) = (mass THC_{in} – mass THC_{out})/mass THC_{in} x 100

g. ROC mass emissions shall be calculated as $Mass_{ROC} = Mass_{THC} – Mass_{Methane} – Mass_{Ethane}$

PERMIT EQUIPMENT LIST - TABLE A

ATC 13378 / FID: 01528 Goleta Sanitary District WWTP / SSID: 01528

A PERMITTED EQUIPMENT

1 Flare

Device ID #	**113016**	***Device Name***	**Flare**
Rated Heat Input	4.758 MMBtu/Hour	*Physical Size*	130.00 scf/Minute
Manufacturer	Varec	*Operator ID*	
Model	244E	*Serial Number*	
Location Note			
Device Description			

2 Odor Control Systems

2.1 Carbon Canisters

Device ID #	**104281**	***Device Name***	**Carbon Canisters**
Rated Heat Input		*Physical Size*	8000.00 Pounds Activated Carbon
Manufacturer		*Operator ID*	
Model		*Serial Number*	
Location Note			
Device Description	ACT 9405 (Pump station). dia. 10.0’, ht. 10.0’; carbon bed depth 4.0’; carbon capacity 8000.0 pounds of caustic-impregnated activated carbon.		

2.2 Headworks Odor Control System

Device ID #	**113019**	***Device Name***	**Headworks Odor Control System**
Rated Heat Input		*Physical Size*	5000.00 Cubic Feet/Minute
Manufacturer		*Operator ID*	
Model		*Serial Number*	
Location Note			
Device Description	Two stage biological and activated carbon system. The biological unit contains a high porosity media wetted by an irrigation system. The activated carbon second stage is a polishing system to control odors on startup. The system is designed for a minimum residence time of 10 seconds.		

2.3 Exhaust Fan

Device ID #	**113020**	***Device Name***	**Exhaust Fan**
Rated Heat Input		*Physical Size*	5000.00 Cubic Feet/Minute
Manufacturer		*Operator ID*	
Model		*Serial Number*	
Location Note			
Device Description	For headworks odor control system		

3 Internal Combustion Engines

3.1 E/S Diesel Generator 1

Device ID #	**113017**	***Device Name***	**E/S Diesel Generator 1**
Rated Heat Input	7.100 MMBtu/Hour	*Physical Size*	1000.00 Brake Horsepower
Manufacturer	tbd	*Operator ID*	
Model	tbd	*Serial Number*	
Location Note			
Device Description	Tier 2 IC Engine M/T operational limits: Daily hours: 2, Annual hours: 50		

3.2 E/S Diesel Generator 2

Device ID #	**113018**	***Device Name***	**E/S Diesel Generator 2**
Rated Heat Input	7.100 MMBtu/Hour	*Physical Size*	1000.00 Brake Horsepower
Manufacturer	tbd	*Operator ID*	
Model	tbd	*Serial Number*	
Location Note			
Device Description	Tier 2 IC Engine M/T operational limits: Daily hours: 2, Annual hours: 50		

4 Flare

Device ID #	**006239**	***Device Name***	**Flare**
Rated Heat Input	12.060 MMBtu/Hour	*Physical Size*	2412.00 MMBtu/yr
Manufacturer	Varec	*Operator ID*	
Model	239-A	*Serial Number*	
Depermitted		*Facility Transfer*	
Device Description	Flare for backup service. Limited to 200 hours/year of operation. Equipped with electronic automatic pilot/ignitor [maximum heat input rating: 0.120 MMBtu/hr]. Used to combust excess gas recovered from digesters. Flared gas volume determined by fuel meter (mfr: Fluids Components Incorporated, model LT81A) Flare dia. 0.5’, ht. 11.0’.		

E DE-PERMITTED EQUIPMENT

1 Exhaust Fans

Device ID #	**104282**	***Device Name***	**Exhaust Fans**
Rated Heat Input		*Physical Size*	3400.00 Cubic Feet/Minute
Manufacturer		*Operator ID*	
Model		*Serial Number*	
Depermitted		*Facility Transfer*	
Device Description	Max gas flow rating (each): 3,400 CFM.		

2 E/S Diesel Generator

Device ID #	**008892**	***Device Name***	**E/S Diesel Generator**
Rated Heat Input	4.500 MMBtu/Hour	*Physical Size*	600.00 Brake Horsepower
Manufacturer	Cummins	*Operator ID*	
Model	KTA 19 G2	*Serial Number*	37116292
Depermitted		*Facility Transfer*	
Device Description	A 600 bhp diesel IC engine powering an electrical generator for backup emergency electrical power.		

3 E/S Diesel Generator

Device ID #	**008893**	***Device Name***	**E/S Diesel Generator**
Rated Heat Input	2.925 MMBtu/Hour	*Physical Size*	390.00 Brake Horsepower
Manufacturer	Allis-Chalmers	*Operator ID*	
Model	2100MK11	*Serial Number*	21-14696
Depermitted		*Facility Transfer*	
Device Description	A 390 bhp diesel IC engine powering an electrical generator for backup emergency electrical power.		

4 Mudcat Sludge Dredge

Device ID #	**008991**	***Device Name***	**Mudcat Sludge Dredge**
Rated Heat Input	1.510 MMBtu/Hour	*Physical Size*	204.00 Brake Horsepower
Manufacturer		*Operator ID*	
Model	LT10C	*Serial Number*	34565325
Depermitted		*Facility Transfer*	
Device Description	A portable, diesel-fired reciprocating internal combustion engine (ICE) driven "Mudcat" sludge dredge (ICE as described in Table 3). This ICE is equipped with a turbocharger and a jacket-water intake air intercooler to reduce NOx emissions. HHV 140,000 Btu/gal fuel. This engine serves a dual purpose by propelling the dredge and pumping the sludge removed by the dredge. It is considered a "mobile" or "vehicular" source and not subject to Rule 333.		

Santa Barbara County
Air Pollution Control District

PERMIT EVALUATION FOR
AUTHORITY TO CONSTRUCT 13378

1.0 BACKGROUND

1.1 General: This ATC is for upgrading the existing Goleta Sanitary District wastewater treatment plant to fully treat all incoming wastewater to a secondary treatment standard. The total capacity of the plant is not increasing. The majority of the modifications to the plant are to aerobic treatment equipment, which is permit exempt, but the following modifications to permitted equipment require an ATC:

- The two existing emergency standby diesel-fired IC engines will be removed and replaced with new Tier 2 emergency standby DICEs.
- A new low NO_x flare with a destruction removal efficiency of at least 99% will be installed.
- The existing flare will be converted to backup use.
- The existing dredge powered by a DICE will be removed and replaced with an electrically powered dredge.
- The existing headworks carbon adsorption odor control system will be removed and replaced with a two stage odor control system consisting of a biofilter first stage and pelletized carbon second stage.

1.2 Permit History:

PERMIT	FINAL ISSUED	PERMIT DESCRIPTION
Reeval 08561 R6	12/11/2009	Reevaluation. Consolidated PTO 11528 for 2 DICE ES20 generators into the permit. New format equipment list.

1.3 Compliance History: The facility has operated in compliance since the most recent permit reevaluation.

2.0 ENGINEERING ANALYSIS

2.1 Equipment/Processes: The primary process changes at the facility are as follows:

In the headworks area, the existing mechanically cleaned bar screens will be replaced with 1/4-inch opening mechanical screens and screenings washer and compactor. The existing carbon adsorption odor control system will be removed and replaced with a two stage odor control system consisting of a biofilter first stage and pelletized carbon second stage.

An existing solids stabilization basin will be converted into a primary effluent flow equalization basin to reduce the impacts of diurnal variations in both flow and load. Approximately 3 million gallons of flow could be diverted to the flow equalization basin after primary treatment. Primary effluent stored in the flow equalization basin will be conveyed to the secondary treatment facilities during hours of low flow.

A new biofilter will be constructed (biofilter No. 2) and will be the same size as the existing biofilter. The two biofilters operating in parallel will be able to treat all of the primary effluent flow. Primary effluent will enter the biofilter pumping station flowing by gravity from the primary clarifiers and also by pumping primary effluent from the flow equalization basin. The biofilter will be fed by gravity through a distributor arm. Biofilter effluent collected in the biofilter underdrain will return by gravity to the biofilter pumping station. Recirculation pumps will recirculate 5.0 MGD through the biofilter, increasing the level of treatment and maintaining hydraulic wetting rates. The remaining biofilter effluent will overflow an internal weir in the biofilter pumping station and flow by gravity to the activated sludge treatment process.

The activated sludge process consists of three new activated sludge tanks, two new and two existing secondary sedimentation tanks, and two return activated sludge (RAS)/waste activated sludge (WAS) pumping stations.

The existing practice of co-thickening primary and secondary sludge in the primary sedimentation tanks will be discontinued. Two mechanical thickeners will be installed in order to thicken the WAS generated by the secondary treatment facilities prior to conveyance to the anaerobic digesters.

An electric dredge will be used to remove solids from the solids stabilization basins, which will then be pumped to a new sludge holding tank. From the sludge holding tank solids will be pumped to a new solids handling building containing two new dewatering screw presses, two WAS mechanical thickeners, and two TWAS pumps. The solids handling building will be provided with a solids loading bay to facilitate loading of dewatered solids into containers for transportation off-site for disposal and/or reuse. The existing practice of dewatering sludge with the belt filter press will be discontinued.

2.2 Emission Controls: Emissions from the flare are controlled by the flare design. See the BACT discussion for a full description of the flare controls. Emissions from the engines are controlled by limiting the duration of maintenance and testing operations and by using Tier-certified engines. The odor control system uses a biofilter first stage and a pelletized carbon second stage.

2.3 Emission Factors: Emission factors for the flare are based on manufacturer's guarantees for NO_x, CO, and ROC emissions, and on default emission factors for PM emissions. SO_x emissions are calculated based on the permitted sulfur content of the digester gas. Emission factors for the engines are based on the Tier standards.

2.4 Reasonable Worst Case Emission Scenario: The reasonable worst case daily scenario is based on operating the backup flare for 24 hours per day while the main flare is out of service. The reasonable worst case annual scenario is based on full time operation of the main flare.

2.5 Emission Calculations: Detailed emission calculation spreadsheets are attached. These emissions define the Potential to Emit for the permitted equipment.

Flare: Mass emissions from the flare are estimated based on the permitted daily and annual gas flow rate to the flare. The gas flow rate was limited based on the results of the Health risk analysis.

E1, lb/day = Flow Rate (scf/day) * HHV (Btu/scf) * EF (lb/MMBtu) / 1,000,000
E2, tpy = Flow Rate (scf/year) * HHV (Btu/scf) * EF (lb/MMBtu) / 1,000,000

Diesel IC Engines: Mass emission estimates for the diesel engine(s) are based on the maximum allowed hours for maintenance and testing. Emissions are determined by the following equations:

E1, lb/day = Engine Rating (bhp) * EF (g/bhp-hr) * Daily Hours (hr/day) * (lb/453.6 g)
E2, tpy = Engine Rating (bhp) * EF (g/bhp-hr) * Annual Hours (hr/yr) * (lb/453.6 g) * (ton/2000 lb)

Daily hours are assumed to be 2 hrs/day (re: ATCM FAQ Ver 1.5 #32).

2.6 Special Calculations: There are no special calculations.

2.7 BACT Analyses: Best Available Control Technology was required for NO_x for this project. BACT for a digester gas-fired flare with a turndown ratio greater than 5:1 is based on a review of existing BACT determinations for digester gas-fired flares. BACT for NO_x is 0.06 lb/MMBtu, with a CO performance standard of 0.30 lb/MMBtu to ensure there is not an increase in CO emissions while NO_x is minimized. The Varec 244E flare uses an annular ring of burners and induced air flow to ensure proper mixing. The design does not use blowers or louvers to control mixing or flame temperature. The flare is equipped with an automatic ignition system and a thermocouple to monitor the pilot flame.

BACT for NO_x for the emergency standby IC engines is the use of Tier-certified engines that meet the most current Tier standard for the horsepower range used.

2.8 Enforceable Operational Limits: The permit has enforceable operating conditions that ensure the equipment is operated properly.

2.9 Monitoring Requirements: Monitoring of the equipment's operational limits are required to ensure that these are enforceable.

2.10 Recordkeeping and Reporting Requirements: The permit requires that the data which is monitored be recorded and reported to the APCD.

3.0 REEVALUATION REVIEW (not applicable)

4.0 REGULATORY REVIEW

4.1 Partial List of Applicable Rules: This project is anticipated to operate in compliance with the following rules:

Rule 201.	Permits Required
Rule 202.	Exemptions to Rule 201
Rule 205.	Standards for Granting Permits
Rule 301.	Circumvention
Rule 302.	Visible Emissions
Rule 303.	Nuisance
Rule 311.	Sulfur Content of Fuels
Rule 333.	Control of Emissions from Reciprocating Internal Combustion Engines
Rule 361.	Small Boilers, Steam Generators, and Process Heaters
Rule 801.	New Source Review
Rule 802.	Nonattainment Review
Rule 803.	Prevention of Significant Deterioration
17 CCR 93115	Airborne Toxic Control Measure for Stationary Compression Ignition Engines

4.2 Rules Requiring Review:

4.2.1 *Rule 202 - Exemptions to Rule 201:* Section L.11 exempts aerobic wastewater treatment equipment. The aerobic wastewater treatment equipment at the plant is therefore exempt from permit, but the anaerobic digesters, boilers, flare, engine, and odor control equipment are subject to permit.

4.2.2 *Rule 311 - Sulfur Content of Fuels*: Section B this rule limits the sulfur content of gaseous fuels to no more than 15 grains per 100 scf (239 ppmvd) and liquid and solid fuels to no more than 0.5 percent sulfur by weight. This permit limits the gaseous fuel burned at the facility to no more than 239 ppmvd. The diesel fuel burned at the facility is subject to the stricter ATCM standard of no more than 0.0015 percent sulfur by weight.

4.2.3 *Rule 361 - Small Boilers, Steam Generators, and Process Heaters:* This rule applies to the two boilers at the facility. The boilers are existing units, so the provisions of the rule do not apply until March 15, 2016. The permittee shall either comply with the low use provisions of this rule after 2016 or shall comply with the emission limits of the rule by January 1, 2020.

4.2.4 *Rule 802 - Nonattainment Review*: The APCD is currently designated nonattainment for the state ozone and PM_{10} standards. The provisions of this rule apply to ozone precursor pollutants (NO_x and ROC), PM_{10} and PM_{10} precursor pollutants (NO_x, ROC and SO_x).

BACT - The BACT threshold is only exceeded for NO_x. See Section 2.7 for a complete discussion regarding BACT.

The Air Quality Impact Analysis (AQIA) requirements under this rule (§D) are not triggered.

Emission offsets (§E) are not triggered.

4.2.5 *17 CCR 93115 - Airborne Toxic Control Measure for Stationary Compression Ignition Engines:* The new E/S DICE are subject to the new stationary emergency standby engine standards of the ATCM. The use of Tier-2 certified engines with PM emissions less than 0.15 g/bhp-hr satisfies the emission standards of the ATCM.

4.3 NEI Calculations: The net emission increase calculation is used to determine whether certain requirements must be applied to a project (e.g., offsets, AQIA, PSD BACT). The daily NEI for this facility is due to the new flare. Daily emissions from the E/S DICE are not included in the daily NEI. The annual NEI for the facility is equal to the annual emissions of the flare and the E/S DICE. Annual emissions from the E/S DICE are included in the NEI calculations.

The increase in emissions permitted by ATC/PTO 11133 from the Mudcat sludge dredge did contribute a P1 term to the facility NEI. Removing the Mudcat sludge dredge generated a P2 term equal to the existing P1 term.

The existing boilers do not contribute to the NEI of the facility.

5.0 AQIA

The project is not subject to the Air Quality Impact Analysis requirements of Regulation VIII.

6.0 OFFSETS/ERCs

6.1 Offsets: The emission offset thresholds of Regulation VIII are not exceeded.

6.2 ERCs: This source does not generate emission reduction credits.

7.0 AIR TOXICS

The APCD reviewed the HRA conducted for the Mitigated Negative Declaration for this project. Several APCD comments on the HRA were not addressed in the lead agency analysis, and during processing of the ATC application the APCD performed additional analyses to finalize the HRA and to assess the District's proposal to install E/S DICE with Tier 2 emission factors. The results of this revised HRA indicated a cancer risk of 8.27 in a million, a chronic index of 0.281, and an acute index of 1.023. The acute risk is just over the APCD's significance threshold of 1.0.

Based on review of the model output, the APCD determined the acute risk is driven by formaldehyde emissions from the primary sedimentation tanks and the primary effluent flow equalization basin. The emission factors assumed for both the sedimentation tank and the equalization basin were taken directly from a 1994 modeling input file; however, the basis of the factors is not clearly documented. In addition, there is other historical data for the District sedimentation tanks that indicates the formaldehyde factor is actually higher than the assumed

emission factor. Due to the uncertainty in these emissions assumptions, and the fact that the acute risk result for the modified facility is only marginally above the significant risk threshold, this ATC has been issued with a condition requiring the Goleta Sanitary District to conduct a further analysis of emissions from the sedimentation tanks and equalization basin. If the analysis confirms that the emissions do contribute to a significant acute risk, GSD will be required to modify or control the process to mitigate the risk.

8.0 CEQA / LEAD AGENCY

The Goleta Sanitary District, as the CEQA lead agency for this project, prepared and adopted a Mitigated Negative Declaration (MND). The APCD reviewed and commented on the MND as a responsible agency. Pursuant to CEQA Guidelines sections 15050, 15096(a) and 15096(f) the Air Pollution Control Officer has reviewed and considered the aforementioned Mitigated Negative Declaration prior to making a decision on this project.

Consistent with the County of Santa Barbara revised development plan (09RVP-00000-00001) and conditions of approval included in the coastal development permit (09CDP-00000-00099), this ATC permit imposes new limits on total flaring to ensure cancer health risk remains below APCD and Santa Barbara County CEQA significance thresholds.

9.0 SCHOOL NOTIFICATION

A school notice pursuant to the requirements of H&SC §42301.6 was not required.

10.0 PUBLIC and AGENCY NOTFICATION PROCESS/COMMENTS ON DRAFT PERMIT

10.1 This project was not subject to public notice.

10.2 The permittee had no comments on the draft permit.

11.0 FEE DETERMINATION

Fees for the APCD's work effects are assessed on a fee basis. The Project Code is *340500* (*WWT (Anaerobic)*). See the *Fee Statement* Attachment for the fee calculations.

12.0 RECOMMENDATION

It is recommended that this permit be granted with the conditions as specified in the permit.

AQ Engineer/Technician	Date	Supervisor	Date

13.0 ATTACHMENT(S)

- Emission Calculations
- Fee Statement

ATTACHMENT

IDS Database Emission Tables

Table 1
Permitted Potential to Emit (PPTE)

	NOx	ROC	CO	SOx	PM	PM_{10}
lb/day	57.28	13.05	73.40	14.26	4.36	4.36
tons/year	3.54	1.92	8.04	2.59	0.57	0.57

Note: Worst case daily PTE is based on operating the backup flare. Worst Case annual PTE is based on operating the full-time flare.

Table 2
Facility Potential to Emit (FPTE)

	NOx	ROC	CO	SOx	PM	PM_{10}
lb/day	57.28	13.05	73.40	14.26	4.36	4.36
tons/year	3.54	1.92	8.04	2.59	0.57	0.57

Note: Worst case daily PTE is based on operating the backup flare. Worst Case annual PTE is based on operating the full-time flare.

Table 3
Facility Net Emission Increase (FNEI-90)

	NOx	ROC	CO	SOx	PM	PM_{10}
lb/day	6.85	9.82	34.26	7.56	2.28	2.28
tons/year	1.75	1.83	6.54	1.38	0.43	0.43

Note: Daily NEI is solely due to the new flare. The two emergency standby engines do not contribute to the daily NEI, but they do contribute to the annual NEI.

FEE STATEMENT

ATC No. 13378

FID: 01528 Goleta Sanitary District WWTP / SSID: 01528

Santa Barbara County
Air Pollution Control District

Device Fee

Device No.	Device Name	Fee Schedule	Qty of Fee Units	Fee per Unit	Fee Units	Max or Min. Fee Apply?	Number of Same Devices	Pro Rate Factor	Device Fee	Penalty Fee?	Fee Credit	Total Fee per Device
113016	Flare	A3	4.758	440.07	Per 1 million Btu input	No	1	1.000	2,093.85	0.00	0.00	2,093.85
113020	Exhaust Fan	A2	7.500	30.41	Per total rated hp	No	1	1.000	228.08	0.00	0.00	228.08
113017	E/S Diesel Generator 1	A3	7.100	440.07	Per 1 million Btu input	No	1	1.000	3,124.50	0.00	0.00	3,124.50
113018	E/S Diesel Generator 2	A3	7.100	440.07	Per 1 million Btu input	No	1	1.000	3,124.50	0.00	0.00	3,124.50
	Device Fee Sub-Totals =								**$8,570.92**	**$0.00**	**$0.00**	
	Device Fee Total =											**$8,570.92**

Permit Fee

Fee Based on Devices **8,570.92**

Fee Statement Grand Total = $8,570

Notes:

(1) Fee Schedule Items are listed in APCD Rule 210, Fee Schedule "A".
(2) The term "Units" refers to the unit of measure defined in the Fee Schedule.

CALIFORNIA COASTAL COMMISSION
SOUTH CENTRAL COAST AREA
89 SOUTH CALIFORNIA ST., SUITE 200
VENTURA, CA 93001
(805) 585-1800

Date: December 16, 2010
Permit Application No. 4-09-011

COASTAL DEVELOPMENT PERMIT

On August 10, 2005, the California Coastal Commission granted to Goleta Sanitary District, permit subject to the attached Standard and Special Conditions, for development consisting of: Upgrade the existing Goleta Sanitary District Wastewater Treatment Plant to provide for full secondary treatment, including: conversion of an existing 57,400 sq. ft. solids stabilization basin to a primary effluent flow equalization basin, construction of a 250 sq. ft. secondary sedimentation splitter box, a 360 sq. ft. Reactivated Sludge (RAS) pumping station, two secondary sedimentation tanks (5,400 sq. ft. each), a 280 sq. ft. aeration splitter box, three activated sludge tanks (12,600 sq. ft. total building size), a 1,121 sq. ft. blower building, upgrade the existing 710 sq. ft. secondary effluent pumping station, installation of new piping, and 43,430 cu. yds. of grading, including 32,000 cu. yds. cut and 11,430 cu. yds fill. No increase in capacity of the Plant is proposed and the capacity will remain at 9 million gallons per day (mgd). This permit is more specifically described in the application on file in the Commission offices.

The development is within the coastal zone in Santa Barbara County at One William Moffett Place.

Issued on behalf of the California Coastal Commission by,

PETER DOUGLAS
Executive Director

Amber Tysor
By: Amber Tysor
Coastal Planner

ACKNOWLEDGMENT:

The undersigned permittee acknowledges receipt of this permit and agrees to abide by all terms and conditions thereof.

The undersigned permittee acknowledges that Government Code Section 818.4 which states in pertinent part, that: "A public entity is not liable for injury caused by the issuance. . . of any permit. . . " applies to the issuance of this permit.

IMPORTANT: THIS PERMIT IS NOT VALID UNLESS AND UNTIL A COPY OF THE PERMIT WITH THE SIGNED ACKNOWLEDGEMENT HAS BEEN RETURNED TO THE COMMISSION OFFICE. 14 Cal. Admin. Code Section 13158(a).

12/17/2010
Date

Permittee

STANDARD CONDITIONS:

1. **Notice of Receipt and Acknowledgment.** The permit is not valid and development shall not commence until a copy of the permit, signed by the permittee or authorized agent, acknowledging receipt of the permit and acceptance of the terms and conditions, is returned to the Commission office.

2. **Expiration.** If development has not commenced, the permit will expire two years from the date on which the Commission voted on the application. Development shall be pursued in a diligent manner and completed in a reasonable period of time. Application for extension of the permit must be made prior to the expiration date.

3. **Interpretation.** Any questions of intent or interpretation of any condition will be resolved by the Executive Director or the Commission.

4. **Assignment.** The permit may be assigned to any qualified person, provided assignee files with the Commission an affidavit accepting all terms and conditions of the permit.

5. **Terms and Conditions Run with the Land.** These terms and conditions shall be perpetual, and it is the intention of the Commission and the permittee to bind all future owners and possessors of the subject property to the terms and conditions.

SPECIAL CONDITIONS:

1. **Plans Conforming to Geotechnical Engineer's Recommendations**

By acceptance of this permit, the applicant agrees to comply with the recommendations contained in all of the geology, geotechnical, and/or soils reports referenced as Substantive File Documents. These recommendations, including recommendations concerning foundations and drainage, shall be incorporated into all final design and construction plans, which must be reviewed and approved by the consultant prior to commencement of development.

The final plans approved by the consultant shall be in substantial conformance with the plans approved by the Commission relative to construction, grading, and drainage. Any substantial changes in the proposed development approved by the Commission that may be required by the consultant shall require amendment(s) to the permit(s) or new Coastal Development Permit(s).

2. **Assumption of Risk, Waiver of Liability and Indemnity**

By acceptance of this permit, the applicant acknowledges and agrees (i) that the site may be subject to hazards from surges, erosion, and flooding; (ii) to assume the risks to the applicant and the property that is the subject of this permit of injury and damage from such hazards in connection with this permitted development; (iii) to unconditionally waive any claim of damage or liability against the Commission, its officers, agents, and employees for injury or damage from such hazards; and (iv) to indemnify and hold harmless the Commission, its officers, agents, and employees with respect to the Commission's approval of the project against any and all liability, claims, demands, damages, costs (including costs and fees incurred in defense of such claims),

expenses, and amounts paid in settlement arising from any injury or damage due to such hazards.

3. Permanent Drainage and Polluted Runoff Control Plan

A. ***Prior to issuance of the Coastal Development Permit***, the applicant shall submit to the Executive Director, two (2) copies of a final Drainage and Runoff Control Plan for the post-construction project site, prepared by a licensed civil engineer or qualified licensed professional. The Plan shall include detailed drainage and runoff control plans with supporting calculations. The plans shall incorporate Best Management Practices (BMPs) including site design, source control and treatment control measures designed to reduce, to the maximum extent practicable, the volume, velocity and pollutant load of stormwater and dry weather runoff leaving the developed site. The consulting licensed civil engineer or qualified licensed professional shall certify in writing that the final Drainage and Runoff Control Plan is in substantial conformance with the following minimum requirements:

(1) The plan shall demonstrate the use of distributed small-scale controls or integrated Best Management Practices (BMPs) that serve to minimize alterations to the natural pre-development hydrologic characteristics and conditions of the site, and effectively address pollutants of concern.

(2) Post-development peak runoff rate and average volume from the site shall be maintained at levels similar to pre-development conditions.

(3) Selected BMPs shall consist, or primarily consist, of site design elements and/or landscape based systems or features that serve to maintain site permeability, avoid directly connected impervious area and/or retain, infiltrate, or filter runoff from rooftops, driveways and other hardscape areas, where feasible. Examples of such features include but are not limited to porous pavement, pavers, rain gardens, vegetated swales, infiltration trenches, cisterns.

(4) Landscaping materials shall consist primarily of native or other low-maintenance plant selections which have low water and chemical treatment demands. An efficient irrigation system designed based on hydrozones and utilizing drip emitters or micro-sprays or other efficient design shall be utilized for any landscaping requiring water application.

(5) All slopes shall be stabilized in accordance with provisions contained in the Landscaping and/or Interim Erosion and Sediment Control Condition for this Coastal Development Permit.

(6) Runoff shall be discharged from the developed site in a non-erosive manner. Energy dissipating measures shall be installed at the terminus of outflow drains where necessary. The consulting engineer shall provide plan details and cross sections for any rock rip-rap and/or other energy dissipating devices or structures associated with the drainage system. The drainage plans shall specify, the location, dimensions, cubic yards of rock, etc. for the any velocity reducing structure with the supporting calculations showing the sizing requirements and how the device meets those sizing requirements. The engineer shall certify that the design of the device minimizes the amount of rock and/or other hardscape necessary to meet the sizing requirements.

(7) Post-construction structural BMPs (or suites of BMPs) shall be designed to treat, infiltrate or filter the amount of stormwater runoff produced by all storms up to and including the 85th percentile, 24-hour storm event for volume-based BMPs, and/or the 85th percentile, 1-hour storm event, with an appropriate safety factor (i.e., 2 or greater), for flow-based BMPs.

(8) All BMPs shall be operated, monitored, and maintained in accordance with manufacturer's specifications where applicable, or in accordance with well recognized technical specifications appropriate to the BMP for the life of the project and at a minimum, all structural BMPs shall be inspected, cleaned-out, and where necessary, repaired prior to the onset of the storm season (October 15th each year) and at regular intervals as necessary between October 15th and April 15th of each year. Debris and other water pollutants removed from structural BMP(s) during clean-out shall be contained and disposed of in a proper manner.

(9) Final drainage plans shall be approved by the project consulting geotechnical engineer.

(10) Should any of the project's surface or subsurface drainage/filtration structures or other BMPs fail or result in increased erosion, the applicant/landowner or successor-in-interest shall be responsible for any necessary repairs to the drainage/filtration system or BMPs and restoration of the eroded area. Should repairs or restoration become necessary, prior to the commencement of such repair or restoration work, the applicant shall submit a repair and restoration plan to the Executive Director to determine if an amendment or new coastal development permit is required to authorize such work.

B. The final Drainage and Runoff Control Plan shall be in conformance with the site/ development plans approved by the Coastal Commission. Any changes to the Coastal Commission approved site/development plans required by the consulting licensed civil engineer, or qualified licensed professional or engineering geologist shall be reported to the Executive Director. No changes to the Coastal Commission approved final site/development plans shall occur without an amendment to the coastal development permit, unless the Executive Director determines that no amendment is required.

4. <u>Interim Erosion Control Plans and Construction Responsibilities</u>

A. ***Prior to the issuance of the Coastal Development Permit***, the applicant shall submit to the Executive Director an Interim Erosion Control and Construction Best Management Practices plan, prepared by licensed civil engineer or qualified water quality professional. The consulting civil engineer/water quality professional shall certify in writing that the Interim Erosion Control and Construction Best Management Practices (BMPs) plan is in conformance with the following requirements:

1. Erosion Control Plan

(a) The plan shall delineate the areas to be disturbed by grading or construction activities and shall include any temporary access roads, staging areas and stockpile areas. The natural areas on the site shall be clearly delineated on the plan and on-site with fencing or survey flags.

(b) Include a narrative report describing all temporary run-off and erosion control measures to be used during construction.

(c) The plan shall identify and delineate on a site or grading plan the locations of all temporary erosion control measures.

(d) The plan shall specify that should grading take place during the rainy season (November 1 – March 31) the applicant shall install or construct temporary sediment basins (including debris basins, desilting basins or silt traps); temporary drains and swales; sand bag barriers; silt fencing; stabilize any stockpiled fill with geofabric covers or other appropriate cover; install geotextiles or mats on all cut or fill slopes; and close and stabilize open trenches as soon as possible.

(e) The erosion control measures shall be required on the project site prior to or concurrent with the initial grading operations and maintained throughout the development process to minimize erosion and sediment from runoff waters during construction. All sediment should be retained on-site, unless removed to an appropriate, approved dumping location either outside of the coastal zone or within the coastal zone to a site permitted to receive fill.

(f) The plan shall also include temporary erosion control measures should grading or site preparation cease for a period of more than 30 days, including but not limited to: stabilization of all stockpiled fill, access roads, disturbed soils and cut and fill slopes with geotextiles and/or mats, sand bag barriers, silt fencing; temporary drains and swales and sediment basins. The plans shall also specify that all disturbed areas shall be seeded with native grass species and include the technical specifications for seeding the disturbed areas. These temporary erosion control measures shall be monitored and maintained until grading or construction operations resume.

2. Construction Best Management Practices

(a) No demolition or construction materials, debris, or waste shall be placed or stored where it may enter sensitive habitat, receiving waters or a storm drain, or be subject to wave, wind, rain, or tidal erosion and dispersion.

(b) No demolition or construction equipment, materials, or activity shall be placed in or occur in any location that would result in impacts to environmentally sensitive habitat areas, streams, wetlands or their buffers.

(c) Any and all debris resulting from demolition or construction activities shall be removed from the project site within 24 hours of completion of the project.

(d) Demolition or construction debris and sediment shall be removed from work areas each day that demolition or construction occurs to prevent the accumulation of sediment and other debris that may be discharged into coastal waters.

(e) All trash and debris shall be disposed in the proper trash and recycling receptacles at the end of every construction day.

(f) The applicant shall provide adequate disposal facilities for solid waste, including excess concrete, produced during demolition or construction.

(g) Debris shall be disposed of at a legal disposal site or recycled at a recycling facility. If the disposal site is located in the coastal zone, a coastal development permit or an

amendment to this permit shall be required before disposal can take place unless the Executive Director determines that no amendment or new permit is legally required.

(h) All stock piles and construction materials shall be covered, enclosed on all sides, shall be located as far away as possible from drain inlets and any waterway, and shall not be stored in contact with the soil.

(i) Machinery and equipment shall be maintained and washed in confined areas specifically designed to control runoff. Thinners or solvents shall not be discharged into sanitary or storm sewer systems.

(j) The discharge of any hazardous materials into any receiving waters shall be prohibited.

(k) Spill prevention and control measures shall be implemented to ensure the proper handling and storage of petroleum products and other construction materials. Measures shall include a designated fueling and vehicle maintenance area with appropriate berms and protection to prevent any spillage of gasoline or related petroleum products or contact with runoff. The area shall be located as far away from the receiving waters and storm drain inlets as possible.

(l) Best Management Practices (BMPs) and Good Housekeeping Practices (GHPs) designed to prevent spillage and/or runoff of demolition or construction-related materials, and to contain sediment or contaminants associated with demolition or construction activity, shall be implemented prior to the on-set of such activity

(m) All BMPs shall be maintained in a functional condition throughout the duration of construction activity.

B. The final Interim Erosion Control and Construction Best Management Practices plan, shall be in conformance with the site/ development plans approved by the Coastal Commission. Any changes to the Coastal Commission approved site/development plans required by the consulting civil engineer/water quality professional shall be reported to the Executive Director. No changes to the Coastal Commission approved final site/development plans shall occur without an amendment to the coastal development permit, unless the Executive Director determines that no amendment is required.

5. <u>Archaeological Monitoring Responsibilities</u>

Prior to issuance of the Coastal Development Permit, the applicant shall retain the services of a qualified archaeologist(s) and Native American consultant(s) with appropriate qualifications acceptable to the Executive Director. The archaeologist(s) and Native American consultant(s) shall be present on-site during all grading and earth disturbance activities for the purpose of locating, recording and collecting any archaeological materials. In the event that any significant archaeological resources are discovered during operations, all work in this area shall be halted and an appropriate data recovery strategy be developed, subject to review and approval of the Executive Director, by the applicant's archaeologist and a native American consultant consistent with CEQA guidelines.

6. <u>Construction Timing and Sensitive Bird Species Surveys</u>

For any construction activities between February 15th and September 1st, the applicant shall retain the services of a qualified biologist or environmental resource specialist (hereinafter,

"environmental resources specialist") to conduct sensitive bird species surveys and monitor project operations associated with all construction activities:

At least 30 calendar days prior to commencement of any construction activities, the applicant shall submit the name and qualifications of the environmental resources specialist, for the review and approval of the Executive Director. The environmental resources specialist shall ensure that all project construction and operations shall be carried out consistent with the following:

A. The applicant shall ensure that the environmental resources specialist, with experience in conducting bird surveys shall conduct bird surveys 30 calendar days prior to the listed activities to detect any active bird nests in all trees within 500 feet of the project site. A follow-up survey must be conducted 3 calendar days prior to the initiation of construction and nest surveys must continue on a monthly basis throughout the nesting season or until the project is completed, whichever comes first.

B. If an active nest of any federally or state listed threatened or endangered species, species of special concern, or any species of raptor is found within 500 ft. of construction activities, the applicant shall retain the services of an environmental resources specialist with experience conducting bird and noise surveys, to monitor bird behavior and construction noise levels. The environmental resources specialist shall be present at all relevant construction meetings and during all significant construction activities (those with potential noise impacts) to ensure that nesting birds are not disturbed by construction related noise. The environmental resources specialist shall monitor birds and noise every day at the beginning of the project and during all periods of significant construction activities. Construction activities may occur only if construction noise levels are at or below a peak of 65 at the nest (s) site. If construction noise exceeds a peak level of 65 dB at the nest (s) site, sound mitigation measures such as sound shields, blankets around smaller equipment, mixing concrete batches off-site, use of mufflers, and minimizing the use of back-up alarms shall be employed. If these sound mitigation measures do not reduce construction noise levels to below the above referenced threshold level, construction within 500 ft. of the nesting trees/areas shall cease and shall not recommence until either new sound mitigation can be employed or nesting is complete.

C. If an active nest of a federally or state-listed threatened or endangered species, bird species of special concern, or any species of raptor is found, the applicant shall notify the appropriate State and Federal Agencies within 24 hours, and shall develop an appropriate action specific to each incident. The applicant shall notify the California Coastal Commission in writing by facsimile or e-mail within 24 hours and consult with the Commission regarding determinations of State and Federal agencies.

7. <u>Removal of Excavated Material</u>

Prior to issuance of the Coastal Development Permit, the applicant shall provide evidence to the Executive Director of the location of the disposal site for all excess excavated material from the site. If the disposal site is located in the Coastal Zone, the disposal site must have a valid coastal development permit for the disposal of fill material. If the disposal site does not have a coastal permit, such a permit will be required prior to the disposal of material.

8. Other Required Agency Permits

Prior to issuance of Coastal Development Permit the applicant shall submit, for the review and approval of the Executive Director, evidence of appropriate final required approvals from State or Federal Agencies, including from the Regional Water Quality Control Board (RWCQB), or evidence that no such approval is required.

Santa Barbara County

Application
for
Proposition 84
Planning Grant
Round 1

Santa Barbara County
IRWM Plan 2012

Santa Barbara County Water Agency

Prepared by

CH2MHILL®

September 28, 2010

Task 4: Establish Data Management System

Introduction

The objective of this task is to establish a DMS, which will set up a process of data collection, storage, and dissemination to IRWM participants, stakeholders, the public, and the State. The type of data that will be included for dissemination may include technical information such as designs, feasibility studies, reports, and information gathered for a specific project in any phase of development including the planning, design, construction, operation, and monitoring of a project. This task will also include cross referencing of existing data in various databases such as:

The WDL that DWR maintains for the state, which stores data from various monitoring stations, including groundwater level wells, water quality stations, surface water stage and flow sites, rainfall/climate observers, and water well logs (http://wdl.water.ca.gov/).

The SWAMP created by SWRCB has standards required for any group collecting or monitoring surface water quality data, using funds from Propositions 13, 40, 50, and 84 (http://www.swrcb.ca.gov/water_issues/programs/swamp).

The GAMA program is maintained by the SWRCB and provides a comprehensive assessment of water quality in water wells throughout the State. GAMA has two main components, the California Aquifer Susceptibility (CAS) assessment and the Voluntary Domestic Well Assessment Project. The CAS combines age dating of water and sampling for low-level volatile organic compounds to assess the relative susceptibility of public supply wells throughout the State. Because water quality in individual domestic wells is unregulated, the program is voluntary and will focus, as resources permit, on specific areas of the State. Constituents to be analyzed include nitrate, total and fecal coliform bacteria, methyl tert-butyl ether, and minerals (http://www.swrcb.ca.gov/gama).

DWR maintains the Integrated Water Resources Information System (IWRIS), which is a data management tool for water resources data and not a database. IWRIS is a web based GIS application that allows entities to access, integrate, query, and visualize multiple sets of data simultaneously (http://www.water.ca.gov/iwris/).

California Environmental Resources Evaluation System (CERES) is an information system developed and maintained by the California Natural Resources Agency to facilitate access to a variety of electronic data describing California's rich and diverse environments.

The DMS as proposed in the 2007 Santa Barbara IRWM Plan needs improvements to include or better provide access to more local water-related information. Currently, Santa Barbara County maintains existing water resources-related and IRWM-related data on the Santa Barbara County Water Agency website located at: http://www.countyofsb.org/pwd/water/index.htm. This site also provides the forum for sharing of reports, public meeting dates, agendas, meeting minutes, and annual reports. In-depth data are not currently stored on the website and the GIS capabilities are not explored extensively.

The objective of the DMS for IRWM Plan 2012 is to store project related data and make it publicly available, is to ensure efficient use of available data, stakeholder access to data, and to ensure the data generated by IRWM implementation activities can be

integrated into existing State databases. A part of the effort of this task will be to explore financial and staff resources to implement the scope under this task.

Task 4.1 Review the Existing Data within the IRWM Region and Identify Data Needs

This task includes identifying and analyzing documents and data that are pertinent to updating the IRWM Plan. The principal task will be to conduct review of previous studies, e.g., City of Santa Barbara's Water Supply Planning Study; SMVWCD annual report, Reports of Santa Barbara County, monitoring reports required by adjudicator. The data gaps/data needs within the IRWM region will be identified from the existing documents.

Where appropriate, data management will be coordinated with State and Federal databases in a format consistent with SWAMP and GAMA.

Task 4.2: Develop a Web-based DMS

One of the objectives of the DMS is to make the data publicly available. This task includes development of a web-based DMS with easy access to the participating agencies including stakeholders. The DMS will serve as a data repository for various types of data (for example, project related data, water quality data). Depending on the type of data, the components and protocols for data assimilation from various sources into the DMS will be developed. For example, a library of information for spatial data can be complied into a Geographic Information System (GIS) on a project by project basis and shared with the stakeholders.

The RWMG will decide on the use of an appropriate website for developing the DMS. The existing system on the website management will be explored at the time of implementation of DMS. For example, the existing Santa Barbara County Water Agency website located at: http://www.countyofsb.org/pwd/water/index.htm also may serve as a resource for the development of the DMS. This site may also be continued to provide the forum for sharing of reports, public meeting dates, agendas, meeting minutes, and annual reports. All data used to support development of the IRWM will be outlined in a database and available for review on the website, which will provide links to information available on partner agency websites. Any required documentation of Proposition 50 will be made available on the DMS website by appropriate project administrators.

Task 4.3 Establish Typical Data Collection Technique

For data gathering a common data collection protocol will be developed to keep the web-based DMS up-to-date. The protocol will describe the use of common and compatible methods for data gathering, analysis, monitoring, and reporting formats. The data collection technique will be developed in such a way that any update on the website will be notified automatically to all the participating stakeholders to bring their attention on the changes made on the data bank.

Task 4.4 Develop Procedure for Adding Data to the DMS

Separate account login information and the website links will be set up to provide access to the DMS for all the stakeholders. Guidelines for uploading the information to the DMS will be developed. Stakeholders will access the website to retrieve information and/or contribute data to the DMS using their account login information.

Task 4.5 Maintain the DMS

The responsibilities for maintenance of the DMS will be explored by the RWMG. The RWMG will select the best approach for maintaining the DMS. This task will include the following:

Develop guidelines for maintaining the DMS system

Update information as it becomes available

Update calendar of meetings and workshops to inform the stakeholders for the upcoming events

Encourage participation from various stakeholders

Resolve any data management related issues

Task 4.6 Data Quality Assurance/Quality Control

Quality assurance/quality control (QA/QC) of data is a major task that involves reviewing the quality of data. This task includes description of the validation or quality assurance/quality control measures that will be implemented by the RWMG for data generated and submitted for inclusion into the DMS.

Under the QA/QC task an effort will be taken to update the datasets and to prepare a consistent format for all types of data.

Task 4.7 Data Sharing

This task includes a protocol preparation on how data collected for IRWM project implementation will be transferred or shared between members of the RWMG and other interested parties throughout the IRWM region, including local, State, and federal agencies. The data saved in the DMS will be distributed to the stakeholders. Efforts will be made to keep compatibility with the State databases including SWAMP, WDL, GAMA program, CEIC, and the CERES.

RWMG and public workshops will serve as the primary venue for information sharing. Other settings where information can be shared include quarterly project progress meetings, monthly agency coordination meetings, e-mail subscription lists, and monthly e-mail newsletters. These forums will serve to continue to facilitate the ongoing data sharing between stakeholders as well as the expansion of the existing Water Agency data warehousing activities.